Town of York
186 York Street
York, Maine 03909-1314

Town Manager/ Selectmen (207)363-1000
Town Clerk/ Tax Collector (207)363-1003
Finance/ Treasurer (207)363-1004
Code Enforcement (207)363-1002
Planning (207)363-1007
Assessor (207)363-1005
Police Department (207)363-1031
Dispatch (207)363-2557
York Beach Fire Department (207)363-1014
York Village Fire Department (207)363-1015
Public Works (207)363-1011
Harbor Master (207)363-1000
Senior Center/ General Assistance (207)363-1036
Parks and Recreation (207)363-1040
Fax (207)363-1009 (207)363-1019
www.yorkmaine.org

BOARD OF SELECTMEN'S MEETING AGENDA
6:30/7:00PM MONDAY, FEBRUARY 29, 2016
YORK LIBRARY

6:30PM: Executive Session: Pursuant to M.R.S. § 405.6.C (Real Estate with Cliff Walk Committee)

Call to Order

Opening Ceremonies

A. Minutes
1. February 18, 2016 Meeting Minutes

B. Chairman's Report

C. Manager's Report

D. Awards
1. Bid Award: Construction of Long Beach Avenue Drainage Projects

E. Reports
1. Energy Steering Committee for Solarize York

F. Citizens' Forum – The Citizens' Forum is open to any member of the audience for comments on any matter. All comments should be respectful in tone and should be directed to the Chair. Comments should be brief and to the point. Questions that require extended answers or that cannot be readily answered will be referred to the Town Manager for follow-up. Anyone who wishes to submit a written request for future agenda items can do so on the form available at this meeting or may obtain the form through the Town Manager's Office.

G. Public Hearings
1. Proposed Ordinance Amendments for May 2016 Referendum
   a. York Village Affordable Elderly Housing Overlay District
   b. York Village Center Zoning Districts
   c. Business Licensing Ordinance
2. New Business License – Cowboy Café

H. Endorsements
Business Licenses:

- Kenneth Churchill DBA: Cowboy Café (Liquor, Special Amusement); located at 4 Bog Road
- Qing Wen Wang DBA: Greenleaves Chinese Restaurant, Inc. (Food Service, Liquor); located at 647 US Route One
- Andrew and Susan Wetzel DBA: Inn at Tanglewood Hall (Bed and Breakfast); located at 611 York Street
- York Village Emporium DBA: Berger's Bike Shop and Ice Cream (Food Service); located at 241 York Street
- Cliff Realty Corporation DBA: Cape Neddick Country Club (Food Service, Liquor, Special Amusement); located at 650 Shore Road
- York Village Hotels, LLC DBA: Microtel Inn and Suites (Innkeeper and Food Service); located at 6 Market Place Drive

I. Old Business

1. Discussion and Possible Action: Connector Road
2. Discussion and Possible Action: Forward Proposed Amendments to Second Public Hearing
    a. York Village Affordable Elderly Housing Overlay District
    b. York Village Center Zoning Districts
    c. Business Licensing Ordinance
3. Discussion and Possible Action: Selectmen Policies
    a. Committee Appointments
    b. Open Space Committee
4. Discussion and Possible Action: Matching Funds for York Village Improvements

J. New Business

1. Discussion and Possible Action: Maine State Retirement Eligibility
2. Discussion and Possible Action: Request for Contingency Funds
3. Property Redemption – 3 Bog Road
4. Discussion and Possible Action: Replace Circuit Breaker Ordinance and Request Funding
5. Special Event Permits
    a. Coast to Summit 100
    b. Walk for Wishes
    c. Big A 50K
    d. Wedding at Churchill Ranch
    e. Spring Ride for the Troops
    f. York Little League Opening Day Parade

K. Future Agendas

L. Other Business

M. Citizens' Forum

Adjourn

BOARD OF SELECTMEN'S
MEETING MINUTES
5:00PM THURSDAY, FEBRUARY 18, 2016
YORK LIBRARY

Present: Chairman Robert E. Palmer, Jr., Torbert Macdonald, Todd A. Frederick, Dawn Sevigny-Watson, Town Manager Stephen H. Burns and members of the public.

Call to Order

Chairman Robert E. Palmer, Jr. called the meeting to order at 5:00PM

A. Minutes

1. February 8, 2016 Meeting Minutes

Moved by Mr. Macdonald, seconded by Ms. Sevigny-Watson to approve the February 8, 2016 Meeting Minutes. Without objection, so ordered.

B. Public Hearing

1. New Business License – American Legion Post #56; located at 647 US Route One (Food Service, Liquor, Special Amusement, Coin-Operated Amusement)

Moved by Mr. Macdonald, seconded by Mr. Frederick to open the public hearing. Without objection, so ordered.

Public Comment: None

Moved by Mr. Macdonald, seconded by Mr. Frederick to close the public hearing. Without objection, so ordered.

C. Endorsements

1. Business Licenses
   a. American Legion Post #56; located at 647 US Route One (Food Service, Liquor, Special Amusement, Coin Operated Amusement)

Back to Agenda

Moved by Mr. Macdonald, seconded by Mr. Frederick to approve the business license for American Legion Post #56; located at 647 US Route One for Food Service, Liquor, Special Amusement and Coin-Operated Amusement subject to taxes, fees and inspections being current and compliant with the usual noise stipulations. Vote 4-0, motion passes.

Adjourn

Moved by Mr. Macdonald, seconded by Ms. Sevigny-Watson to adjourn the meeting at 5:10PM. Without objection, so ordered

Respectfully Submitted,

Melissa M. Avery
Assistant to the Town Manager

DRAFT

Back to Agenda

REQUEST FOR ACTION BY BOARD OF SELECTMEN

DATE SUBMITTED: February 25, 2016	☒ ACTION
DATE ACTION REQUESTED: February 29, 2016	☐ DISCUSSION ONLY
SUBJECT: Long Beach Avenue Drainage Projects – Construction Bid Award	

DISCUSSION OF OPTIONS AVAILABLE TO THE BOARD:
A summary of the relevant history for this project is as follows:

- On May 19, 2012 the voters approved $350,000 to fund the drainage project just north of the Anchorage Hotel.
- On May 18, 2013 the voters approved $350,000 to fund the drainage project just north of the Long Sands Bath House.
- On September 23, 2013 the Board of Selectmen authorized town staff to put out a Request for Proposal for survey work for the three capital projects.
- On January 27, 2014 the Board of Selectmen awarded the Long Beach Avenue Existing Conditions Survey bid to North Easterly Surveying, Inc. in the amount of $19,465.
- On April 14, 2014 the Board of Selectmen approved the submittal of a MPI Grant Application.
- On June 24, 2014 Maine DOT notified that the towns MPI Grant application was approved.
- On January 12, 2015 The Board of Selectmen approved the release of the RFP for the Long Beach Master Plan.
- On February 23, 2015 the Board of Selectmen awarded the Long Beach Master Plan to Ransom Engineering Team.
- On March 20, 2015 Mike Sullivan, Steve Bradstreet and Dean Lessard met with Bill Bullard of Maine DEP for a Pre-application meeting.
- On April 13, 2015 The Board of Selectmen approved the acceptance of a Maine DOT MPI grant in the amount of $500,000.
- On October 30, 2015 the Town received the NRPA permits from Maine DEP for the installation of both Long Beach Drainage projects.
- On November 16, 2015 the Board of Selectmen approved finalizing the drainage design and soliciting construction bids for both Long Beach Drainage Projects.
- On January 26, 2016 The Town of York Department of Public Works through Ransom Consulting solicited bids from 12 preapproved contractors for the construction of the Long Beach Drainage projects. The project was also advertised in the Portsmouth Herald and York Weekly.
- On February 9, 2016 The Town of York Department of Public Works and Ransom Consulting conducted a pre-bid meeting for all interested contractors.
- On February 22, 2016 Separate sealed bids were due in the Town Manager's office by 2:00 PM. The Town received four (4) responsive bids. The bids are listed on the next page.

Back to Agenda

BID RESULTS:

- SUR Construction - $561,530.00 $5,700 field office;
- D & C Construction - $643,390.50 $3,600 field office;
- DDI Construction - $667,263.00 $10,000 field office;
- Mick Construction - $773,449.00 $5,000 field office;

Included with the selectmen's action form is the design plans for the drainage improvements on Long Beach Avenue.

RECOMMENDATION: Approve the award of the Long Beach Avenue Drainage Projects to SUR Construction in the amount of $561,530 and to award the field office option in the amount of $5,700.

PROPOSED MOTION: **I move to approve the award of the Long Beach Avenue Drainage Projects to SUR Construction in the amount of $561,530. I also move to award the field office option in the amount of $5,700.**

FISCAL IMPACT: $567,230

DEPARTMENT LINE ITEM ACCOUNT: 231.0000.8001 & 231.2014.3000

BALANCE IN LINE ITEM IF APPROVED: $57,118.29

PREPARED BY: Dean Lessard REVIEWED BY: _____

Back to Agenda

TOWN OF YORK

APPARENT BID RESULTS

BIDS WERE PUBLICALLY OPENED ON: February 22, 2016 at 2:00 P.M.

LONG BEACH AVENUE OUTFALL CULVERT REPLACEMENT
YORK, MAINE

	CONTRACTOR	BID AMOUNT	BID BOND SUBMITTED	ADDENDA NOTED
		$5,700.00		
1.	SUR Construction	$561,530.00	✓	✓
		$5,000.00		
2.	MICK Construction	$773,449.00	✓	✓
		$10,000.00		
3.	DDI Construction	$667,263.00	✓	✓
		$3,600.00		
4.	D & C Construction	$643,390.50	✓	✓
5.				
6.				
7.				
8.				
9.				
10.				

Bids were opened publically and in the presence of the Town's Representative.

Town of York

P:\2015\151.06011\LONG SANDS BEACH\CULVERT BIDDING\APPARENT BID RESULTS.DOC

Back to Agenda

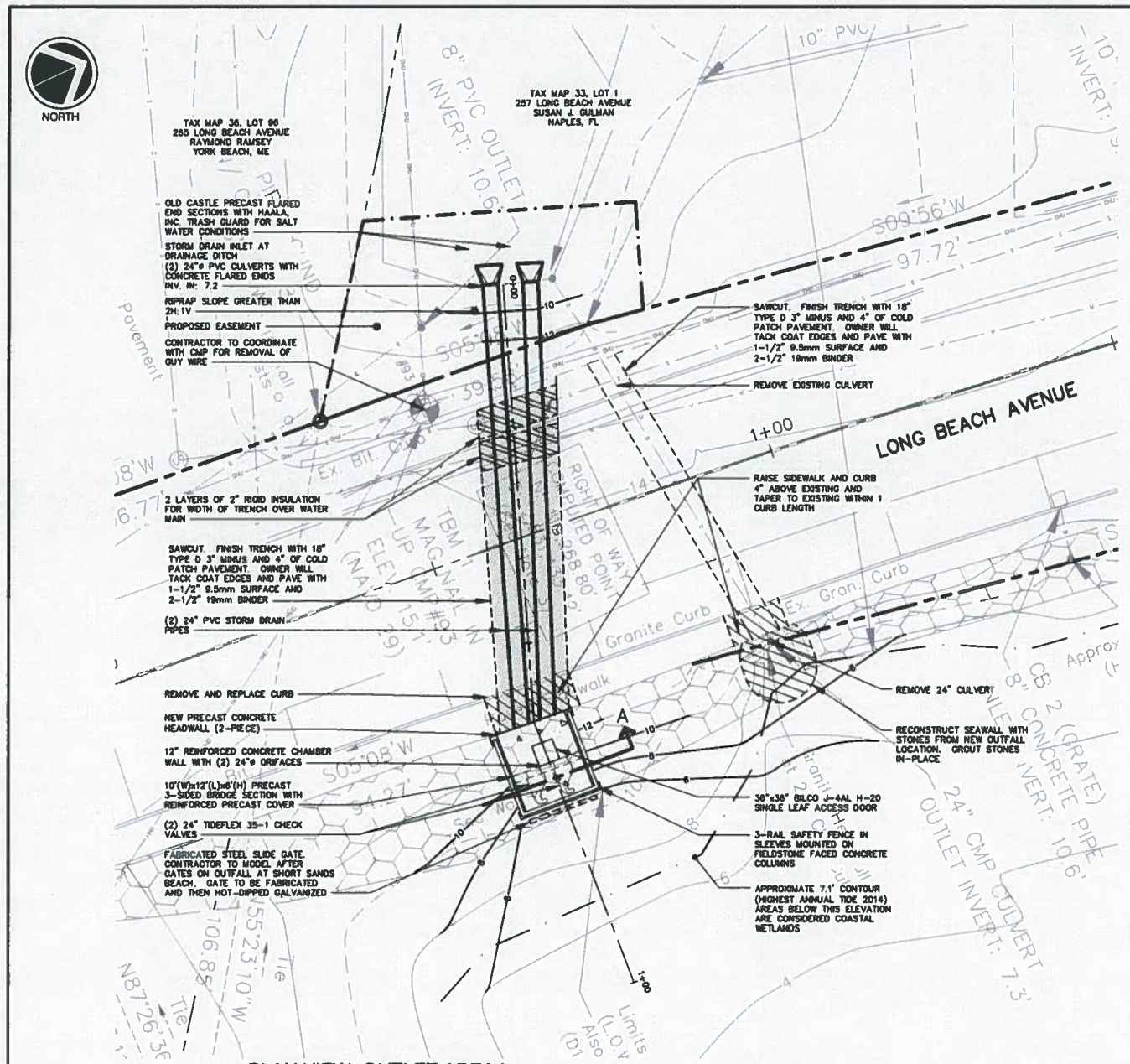

PLAN VIEW: OUTLET AREA L

STA 0+00 TO STA 1+00
SCALE: 1" = 10' (H)

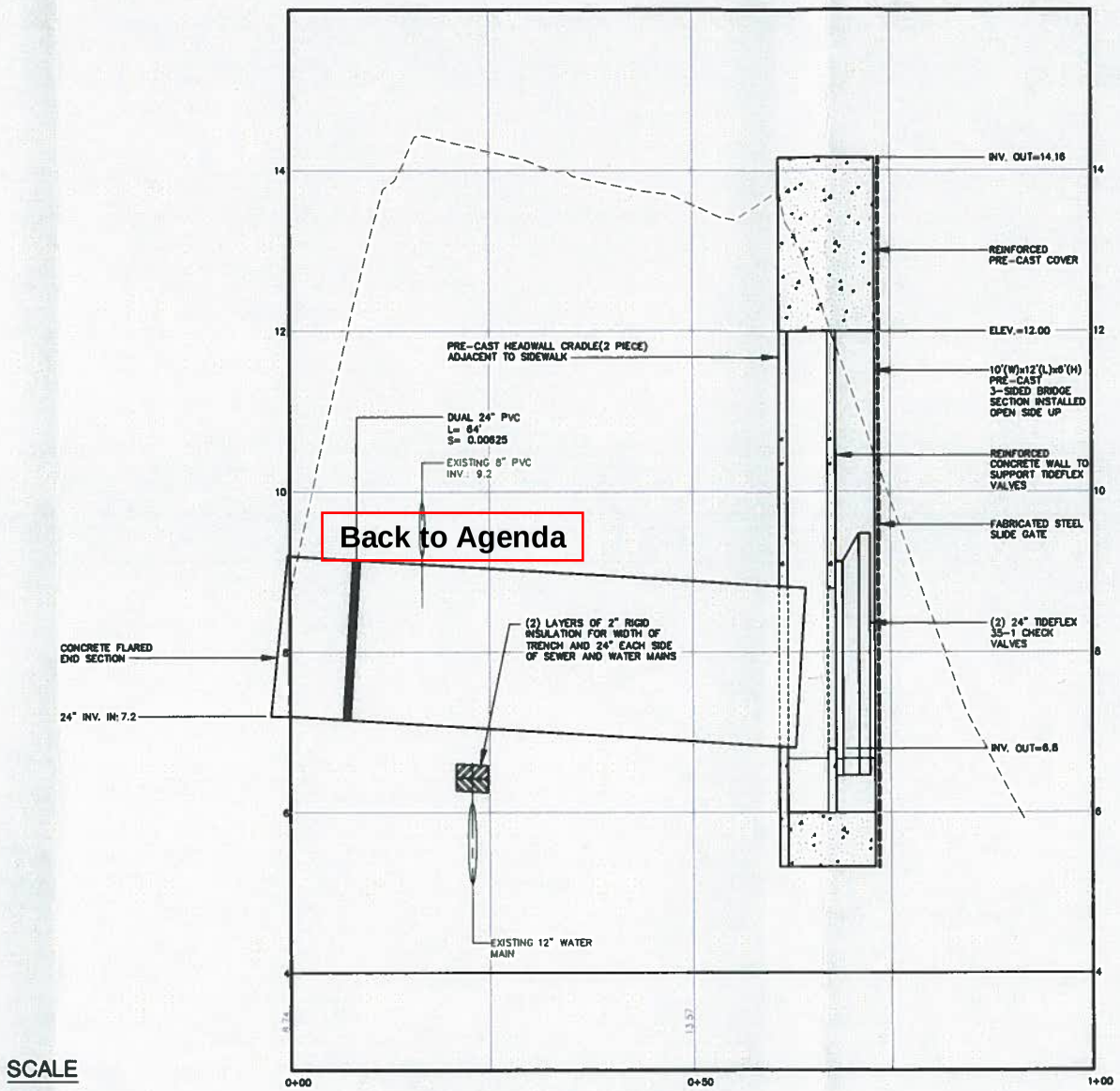

Back to Agenda

PROFILE VIEW: OUTLET AREA L

STA 0+00 TO STA 1+00
SCALE: 1" = 10' (H)
SCALE: 1" = 1' (V)

SCALE

0 5 10 20

SCALE in FEET
1"=10'

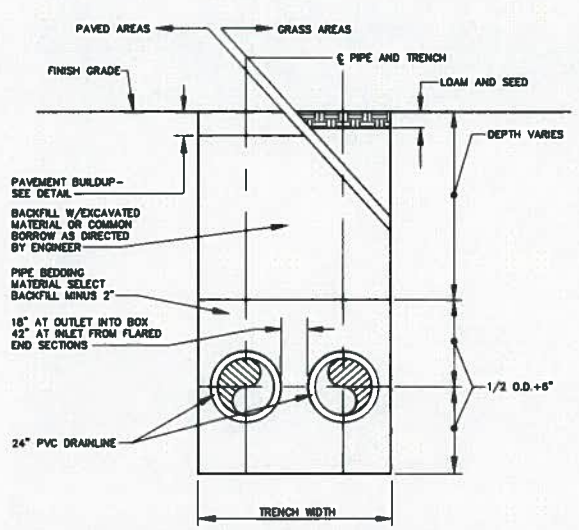

TYPICAL TRENCH DETAIL

NOT TO SCALE

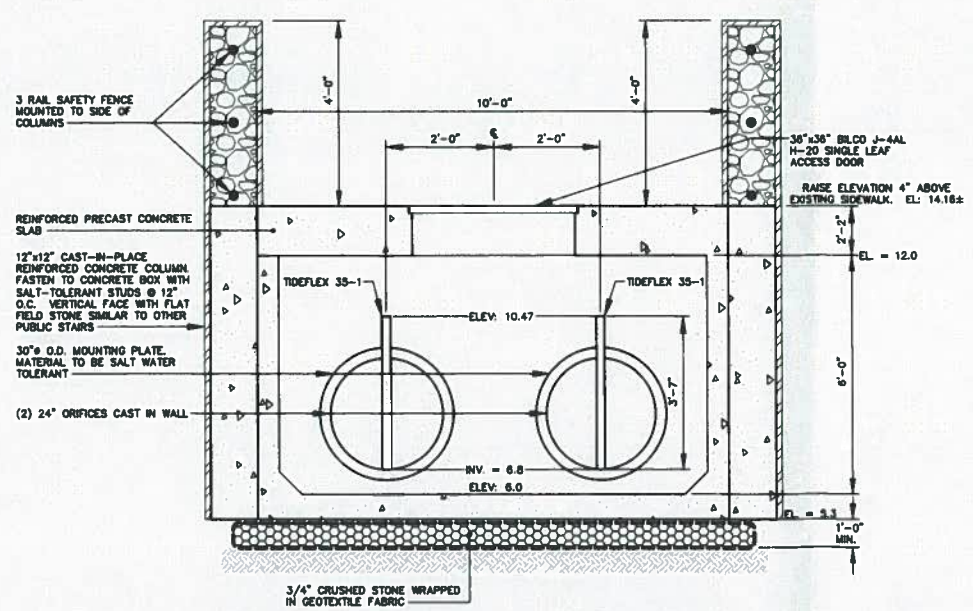

SECTION A-A - OUTLET STRUCTURE @ OUTFALL L

NOT TO SCALE

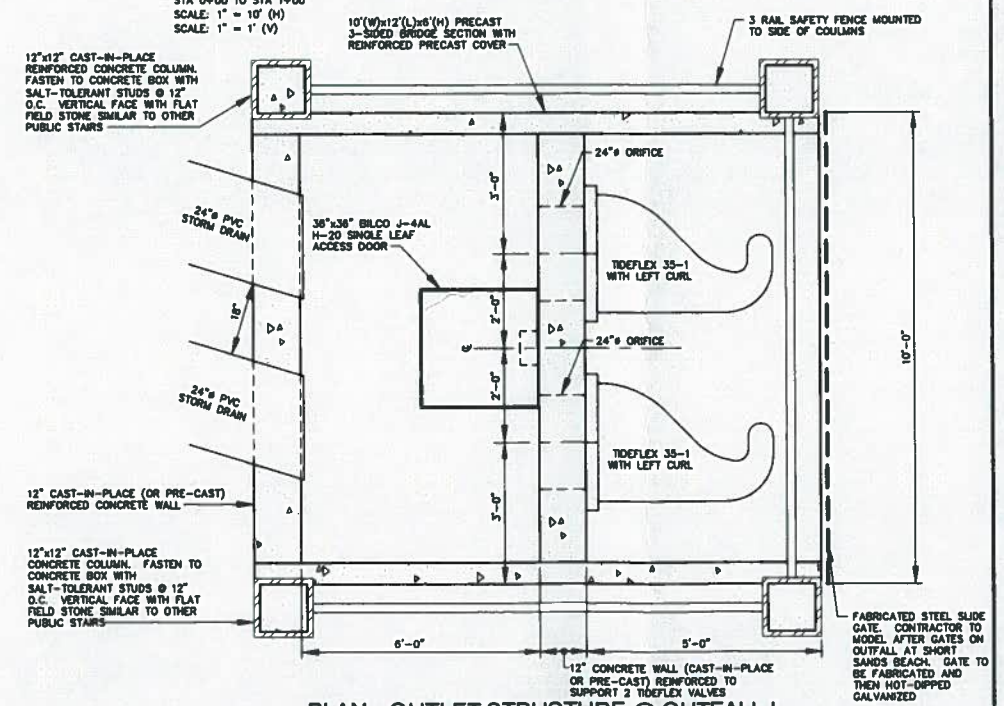

PLAN - OUTLET STRUCTURE @ OUTFALL L

NOT TO SCALE

Site:

LONG BEACH AVENUE IMPROVEMENTS

LONG BEACH AVENUE
YORK, MAINE

Prepared for:

TOWN OF YORK
186 YORK STREET
YORK, MAINE 03909

STATE OF MAINE
STEPHEN J. BRADSTREET #5740
LICENSED PROFESSIONAL ENGINEER

CIVIL ENGINEER:
STEPHEN J. BRADSTREET, PE #5740
400 COMMERCIAL STREET, SUITE 404
PORTLAND, ME 04101
207-772-2891

RANSOM
Consulting Engineers and Scientists
400 Commercial Street, Suite 404
Portland, ME 04101
Tel. (207) 772-2891
Fax (207) 772-3248
www.ransomenv.com

PLAN AND DETAILS OUTLET AREA L CULVERT REPLACEMENT

No.	Revision/Issue	Date
C	PER PRE-BID MTG. COMM.	2/11/16
B	ISSUED FOR BIDS	1/29/16
A	PRELIMINARY REVIEW	08/28/15

Design by: MPM	Checked by: SJB
Drawn by: JAR	Approved by: SJB
Project: 151.06001	Date: MARCH 2015

Sheet No: C-101

Sheet 2 of 6

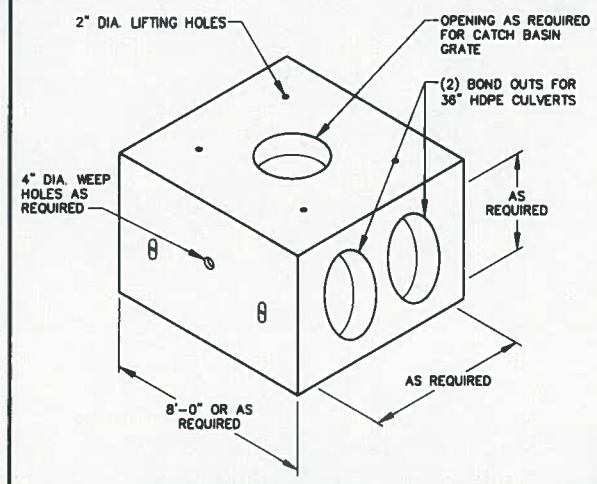

PRE-CAST CONCRETE BOX WITH CATCH BASIN OPENING

NOT TO SCALE

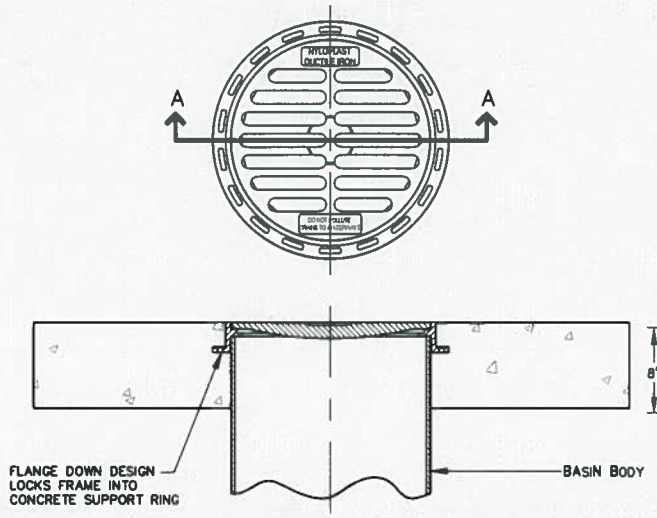

24" STANDARD GRATE DETAIL

NOT TO SCALE

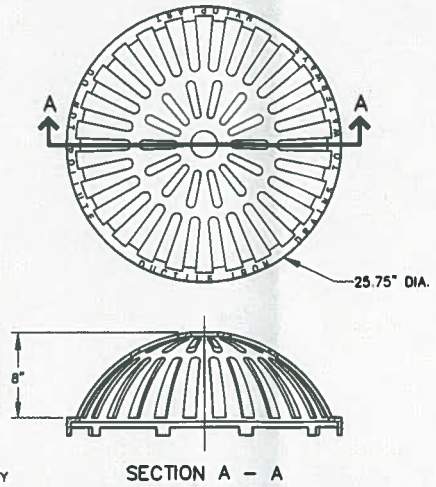

NOTES:
1. DIMENSIONS ARE FOR REFERENCE ONLY AND MAY VARY.
2. MATERIALS SHALL CONFORM TO ASTM A536 GRADE 70-50-05.
3. PAINT: CASTINGS ARE FURNISHED WITH A BLACK PAINT.
4. LOCKING DEVICE AVAILABLE UPON REQUEST.

24" DOME GRATE DETAIL

NOT TO SCALE

Back to Agenda

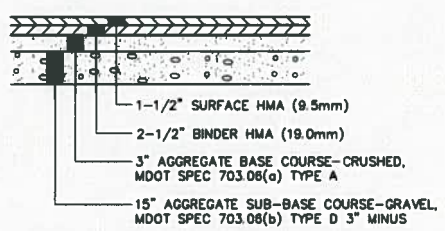

TYPICAL PAVEMENT BUILDUP

NOT TO SCALE

NOTES:
1. 24" STANDARD GRATES SHALL BE DUCTILE IRON PER ASTM A536 GRADE 70-50-05.
2. 24" FRAMES SHALL BE DUCTILE IRON PER ASTM A536 GRADE 70-50-05. 8" & 10" STANDARD GRATES FIT DIRECTLY ONTO DRAIN BASINS WITH THE USE OF A PVC BODY TOP. SEE DRAWING NO. 7001-110-045.
3. DRAIN BASIN TO BE CUSTOM MANUFACTURED ACCORDING TO PLAN LOCATION. RISERS ARE NEEDED FOR BASINS OVER 84" DUE TO SHIPPING RESTRICTIONS.
4. DRAINAGE CONNECTION STUB JOINT TIGHTNESS SHALL CONFORM TO ASTM D3212 FOR CORRUGATED HDPE (ADS N-12/HANCOR DUAL WALL), N-12 HP, & PVC SEWER (4" – 24").
5. ADAPTERS CAN BE MOUNTED ON ANY ANGLE 0° TO 360°.
6. 24" STANDARD GRATES SHALL MEET H-20 LOAD RATING.

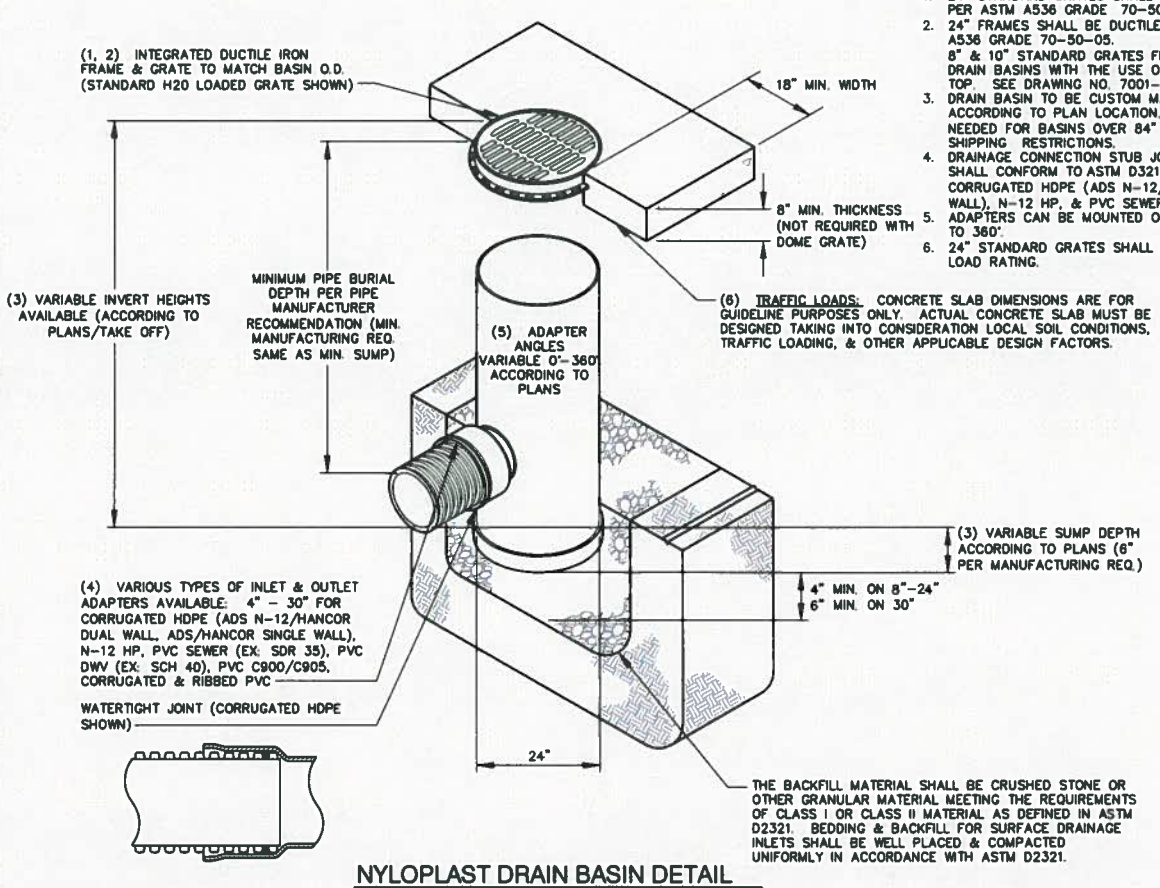

(6) TRAFFIC LOADS: CONCRETE SLAB DIMENSIONS ARE FOR GUIDELINE PURPOSES ONLY. ACTUAL CONCRETE SLAB MUST BE DESIGNED TAKING INTO CONSIDERATION LOCAL SOIL CONDITIONS, TRAFFIC LOADING, & OTHER APPLICABLE DESIGN FACTORS.

NYLOPLAST DRAIN BASIN DETAIL

NOT TO SCALE

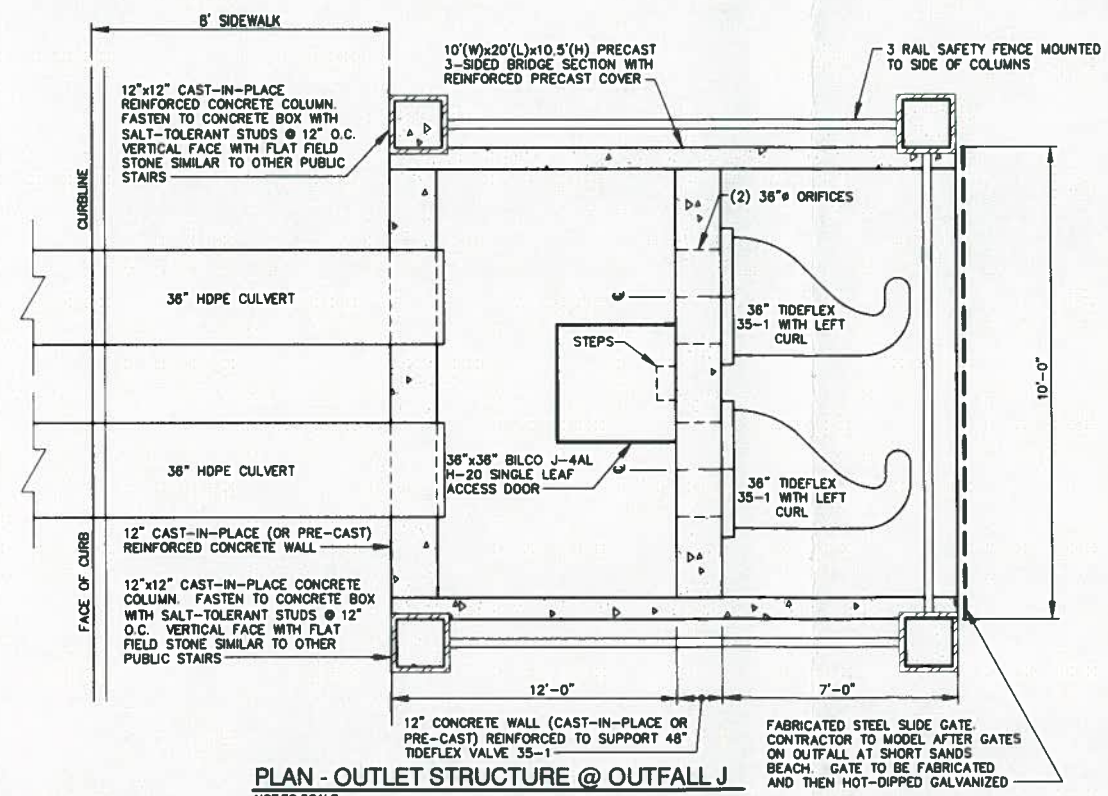

PLAN - OUTLET STRUCTURE @ OUTFALL J

NOT TO SCALE

Site:

LONG BEACH AVENUE IMPROVEMENTS

LONG BEACH AVENUE
YORK, MAINE

Prepared for:

TOWN OF YORK
186 YORK STREET
YORK, MAINE 03909

CIVIL ENGINEER:
STEPHEN J. BRADSTREET, PE #5740
400 COMMERCIAL STREET, SUITE 404
PORTLAND, ME 04101
207-772-2891

RANSOM
Consulting Engineers and Scientists
400 Commercial Street, Suite 404
Portland, ME 04101
Tel. (207) 772-2891
Fax (207) 772-3248
www.ransomenv.com

DETAILS

No.	Revision/Issue	Date
C	PER PRE-BID MTG. COMM.	2/11/16
B	ISSUED FOR BIDS	1/29/16
A	PRELIMINARY REVIEW	08/31/15

Design by: MPM	Checked by: SJB
Drawn by: JAR	Approved by: SJB
	Date: MARCH 2015

C-104

Sheet 5 of 6

LONG BEACH AVENUE IMPROVEMENTS
YORK, MAINE

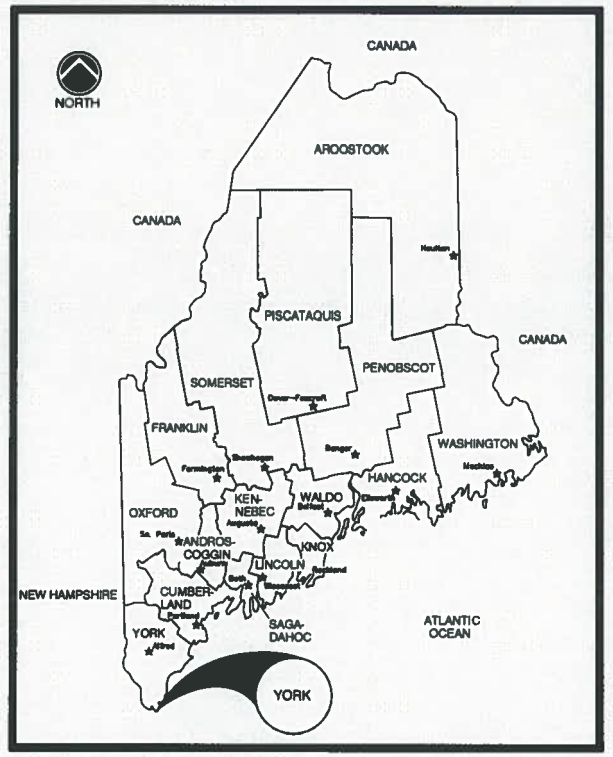

LOCATION MAP
NOT TO SCALE

PREPARED BY:

RANSOM
Consulting
Engineers
and Scientists

400 Commercial Street, Suite 404
Portland, ME 04101
Tel. (207) 772-2891
Fax (207) 772-3248
www.ransomenv.com

Back to Agenda

SHEET INDEX:

SHEET	SHEET NO.	DESCRIPTION
1	-	COVER SHEET
2	C-101	PLAN AND DETAILS OUTLET AREA L CULVERT REPLACEMENT
3	C-102	PLAN AND DETAILS OUTLET AREA J CULVERT REPLACEMENT
4	C-103	PARKING LOT STORMWATER IMPROVEMENTS
5	C-104	DETAILS
6	C-105	DETAILS

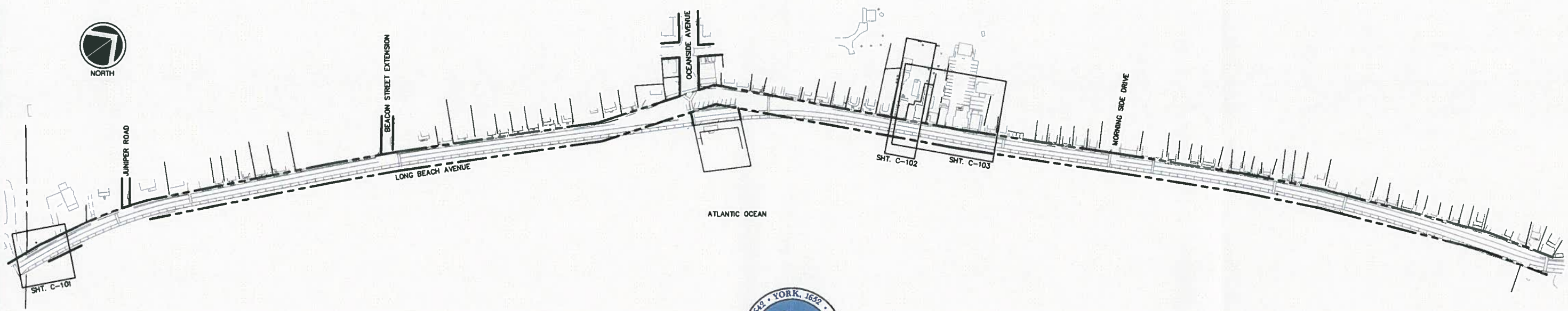

SCALE
0 60 120 240
SCALE In FEET
1"=120'

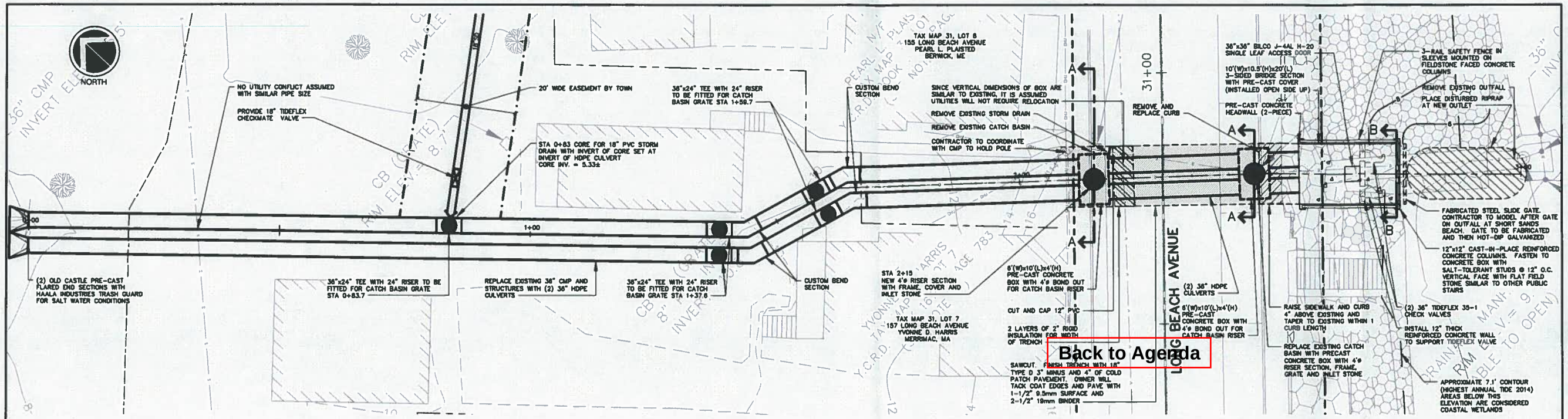

Back to Agenda

PLAN VIEW: OUTLET AREA J

STA 0+00 TO STA 3+00
SCALE: 1" = 10' (H)

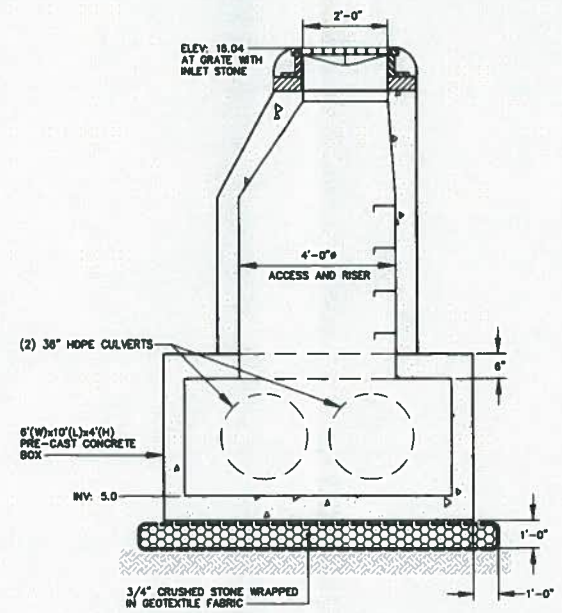

SECTION A-A - CATCH BASIN STRUCTURE @ OUTFALL J

NOT TO SCALE

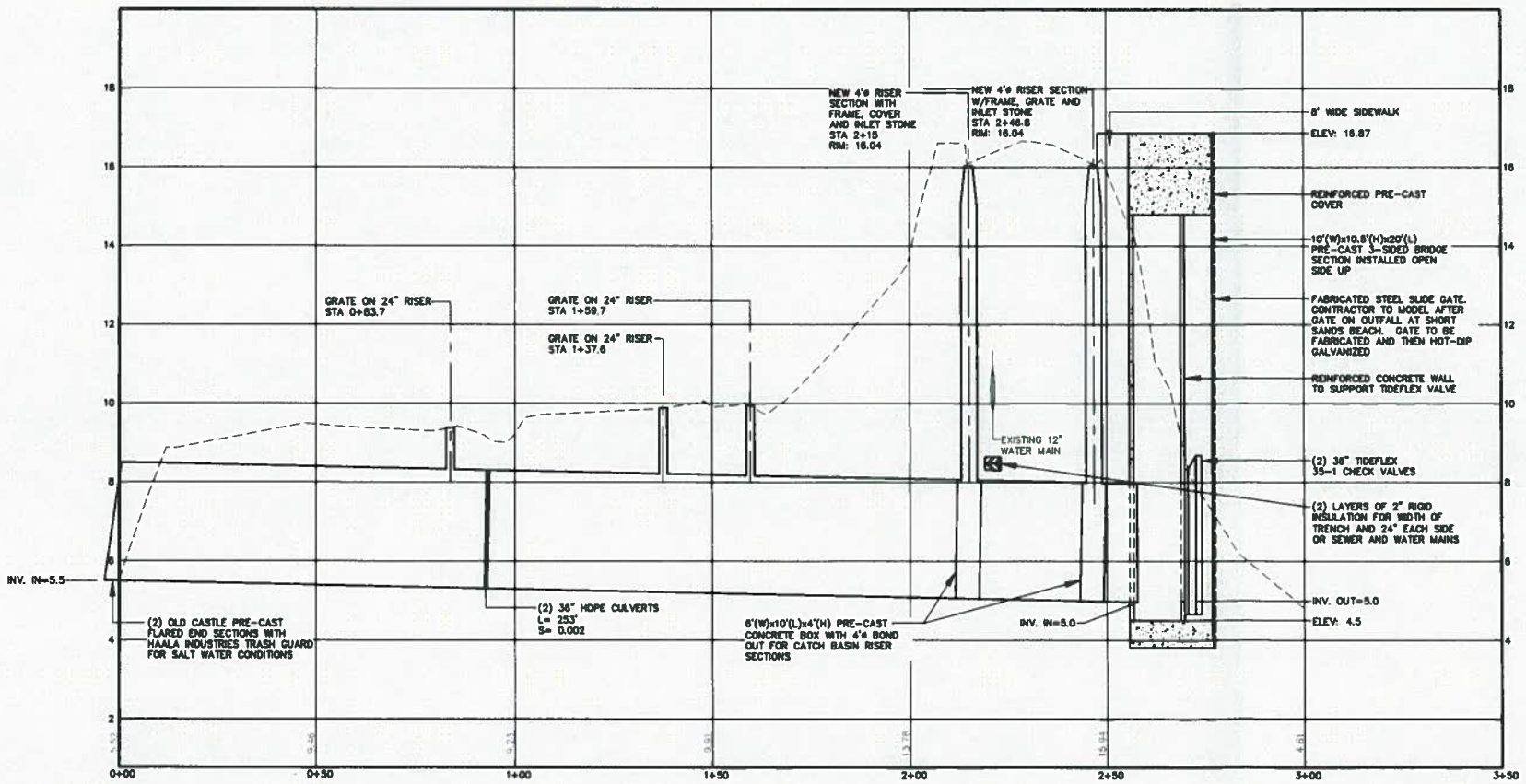

PROFILE VIEW: OUTLET AREA J

STA 0+00 TO STA 3+00.4
SCALE: 1" = 20' (H)
SCALE: 1" = 2' (V)

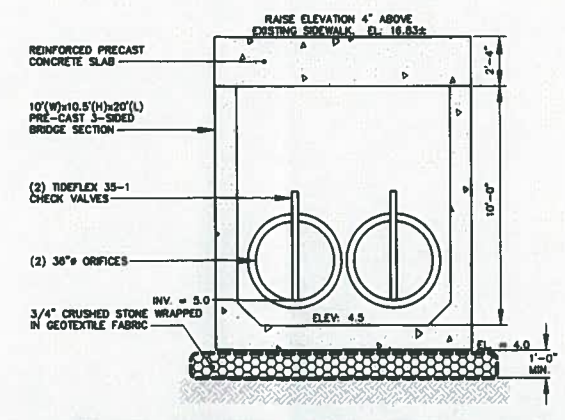

SECTION B-B- OUTLET STRUCTURE @ OUTFALL J

NOT TO SCALE

SCALE

0 5 10 20

SCALE in FEET
1"=10'

Site:

LONG BEACH AVENUE IMPROVEMENTS

LONG BEACH AVENUE
YORK, MAINE

Prepared for:

TOWN OF YORK
188 YORK STREET
YORK, MAINE 03909

STATE OF MAINE
STEPHEN J. BRADSTREET
#5740
LICENSED
PROFESSIONAL ENGINEER

CIVIL ENGINEER:
STEPHEN J. BRADSTREET, PE #5740
400 COMMERCIAL STREET, SUITE 404
PORTLAND, ME 04101
207-772-2891

RANSOM
Consulting Engineers and Scientists
400 Commercial Street, Suite 404
Portland, ME 04101
Tel. (207) 772-2891
Fax (207) 772-3248
www.ransomenv.com

PLAN AND DETAILS OUTLET AREA J CULVERT REPLACEMENT

No.	Revision/Issue	Date
B	ISSUED FOR BIDS	1/29/16
A	PRELIMINARY REVIEW	08/31/15

Design by: MPM	Checked by: SJB
Drawn by: JAR	Approved by: SJB
Project: 151.06001	Date: MARCH 2015

Sheet No: C-102

Sheet 3 of 6

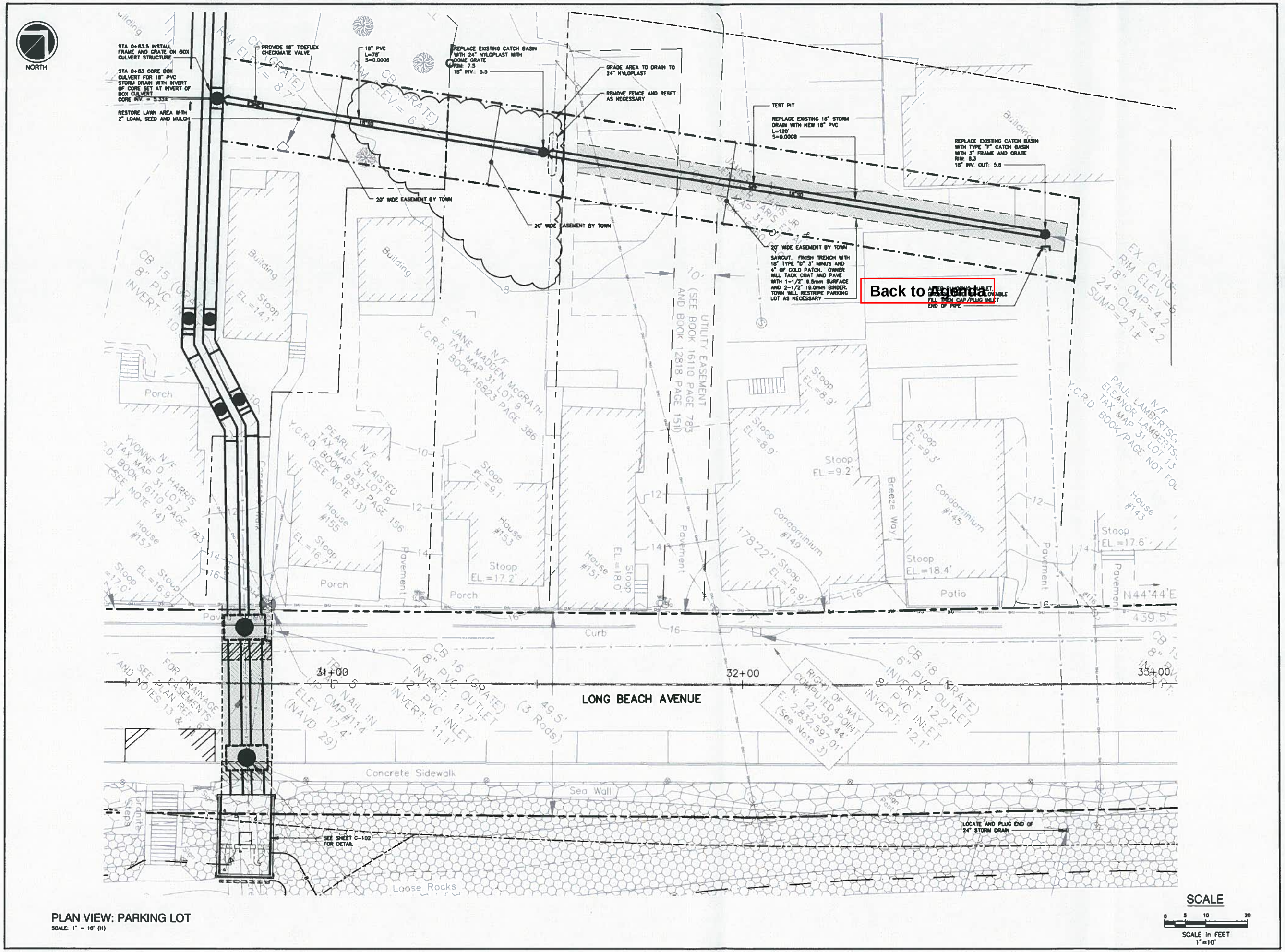

PLAN VIEW: PARKING LOT

SCALE: 1" = 10' (H)

SCALE

0 5 10 20

SCALE in FEET 1"=10'

Site:

LONG BEACH AVENUE IMPROVEMENTS

LONG BEACH AVENUE
YORK, MAINE

Prepared for:

TOWN OF YORK
186 YORK STREET
YORK, MAINE 03909

STATE OF MAINE
STEPHEN J. BRADSTREET #5740
LICENSED PROFESSIONAL ENGINEER

CIVIL ENGINEER:
STEPHEN J. BRADSTREET, PE #5740
400 COMMERCIAL STREET, SUITE 404
PORTLAND, ME 04101
207-772-2891

RANSOM
Consulting Engineers and Scientists
400 Commercial Street, Suite 404
Portland, ME 04101
Tel. (207) 772-2891
Fax (207) 772-3248
www.ransomenv.com

PARKING LOT STORMWATER IMPROVEMENTS

No.	Revision/Issue	Date
B	ISSUED FOR BIDS	1/29/16
A	PRELIMINARY REVIEW	08/31/15

Design by: MPM	Checked by: SJB
Drawn by: JAR	Approved by: SJB
Project: 151.06001	Date: MARCH 2015

Sheet No: C-103

Sheet 4 of 6

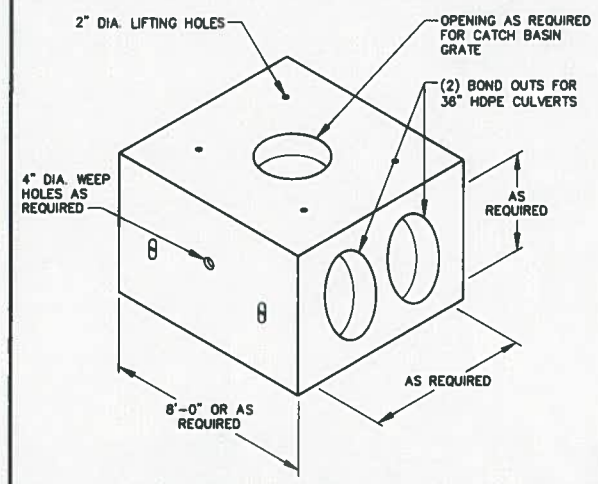

PRE-CAST CONCRETE BOX WITH CATCH BASIN OPENING

NOT TO SCALE

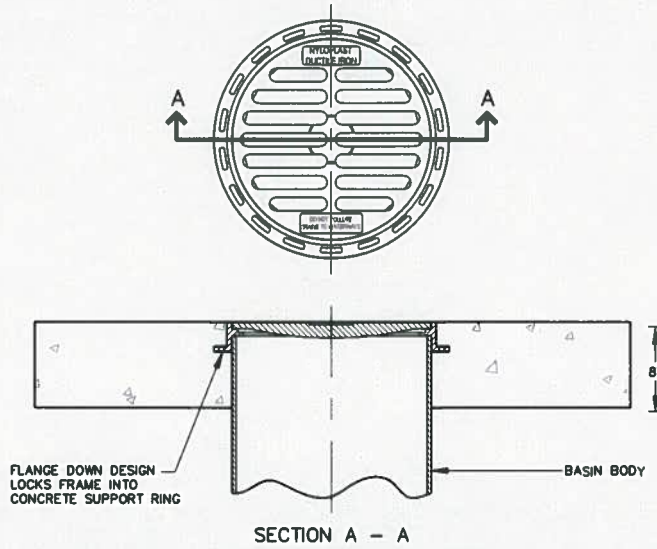

24" STANDARD GRATE DETAIL

NOT TO SCALE

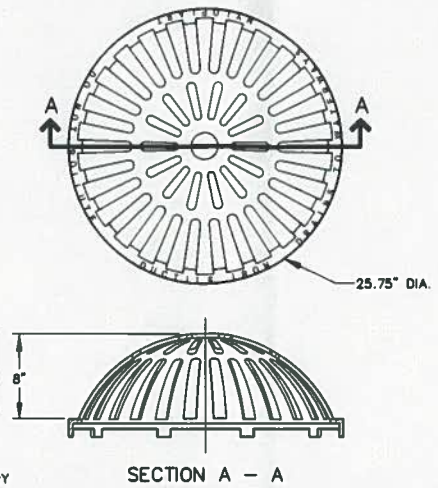

NOTES:
1. DIMENSIONS ARE FOR REFERENCE ONLY AND MAY VARY.
2. MATERIALS SHALL CONFORM TO ASTM A536 GRADE 70-50-05.
3. PAINT: CASTINGS ARE FURNISHED WITH A BLACK PAINT.
4. LOCKING DEVICE AVAILABLE UPON REQUEST.

24" DOME GRATE DETAIL

NOT TO SCALE

Back to Agenda

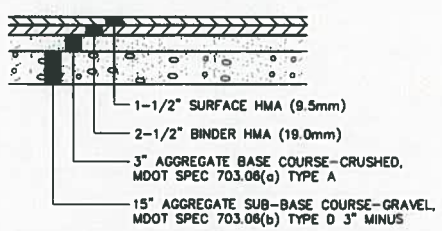

TYPICAL PAVEMENT BUILDUP

NOT TO SCALE

NOTES:
1. 24" STANDARD GRATES SHALL BE DUCTILE IRON PER ASTM A536 GRADE 70-50-05.
2. 24" FRAMES SHALL BE DUCTILE IRON PER ASTM A536 GRADE 70-50-05.
   8" & 10" STANDARD GRATES FIT DIRECTLY ONTO DRAIN BASINS WITH THE USE OF A PVC BODY TOP. SEE DRAWING NO. 7001-110-045.
3. DRAIN BASIN TO BE CUSTOM MANUFACTURED ACCORDING TO PLAN LOCATION. RISERS ARE NEEDED FOR BASINS OVER 84" DUE TO SHIPPING RESTRICTIONS.
4. DRAINAGE CONNECTION STUB JOINT TIGHTNESS SHALL CONFORM TO ASTM D3212 FOR CORRUGATED HDPE (ADS N-12/HANCOR DUAL WALL), N-12 HP, & PVC SEWER (4" – 24").
5. ADAPTERS CAN BE MOUNTED ON ANY ANGLE 0° TO 360°.
6. 24" STANDARD GRATES SHALL MEET H-20 LOAD RATING.

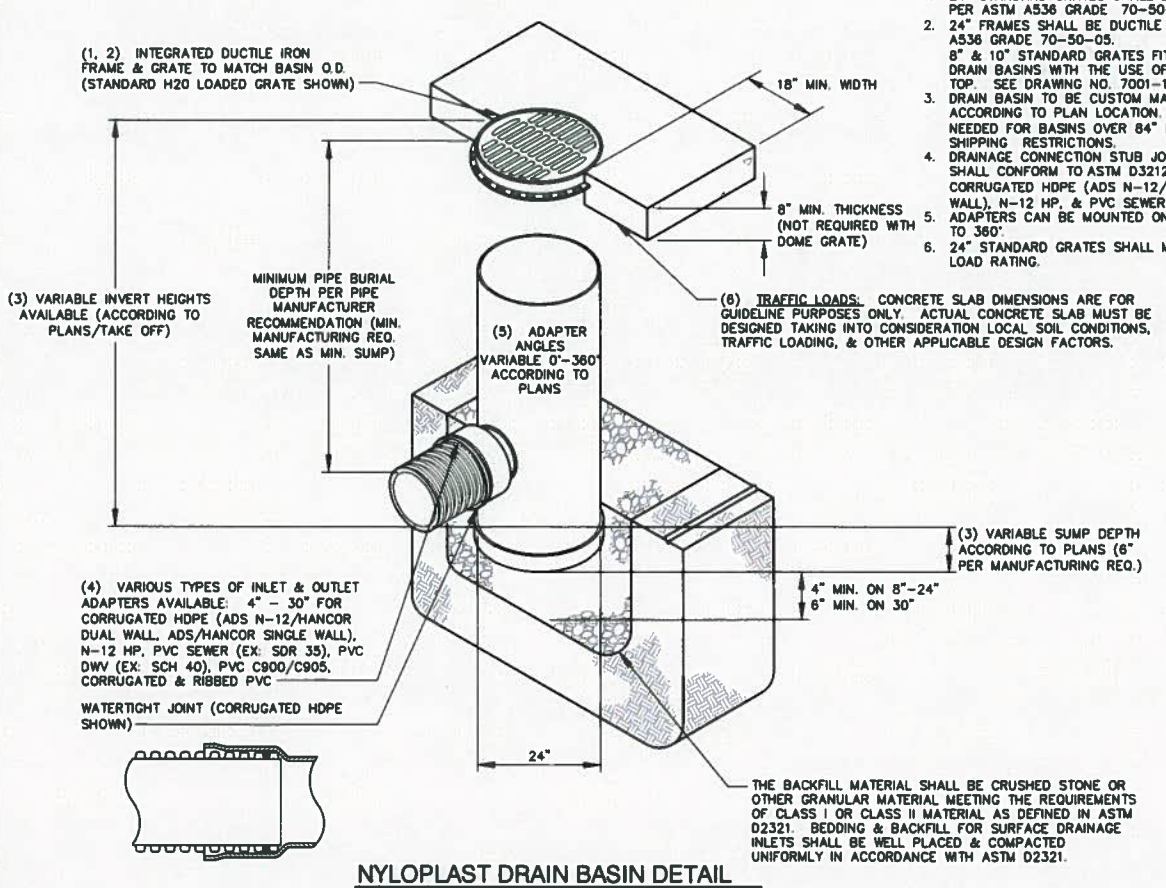

NYLOPLAST DRAIN BASIN DETAIL

NOT TO SCALE

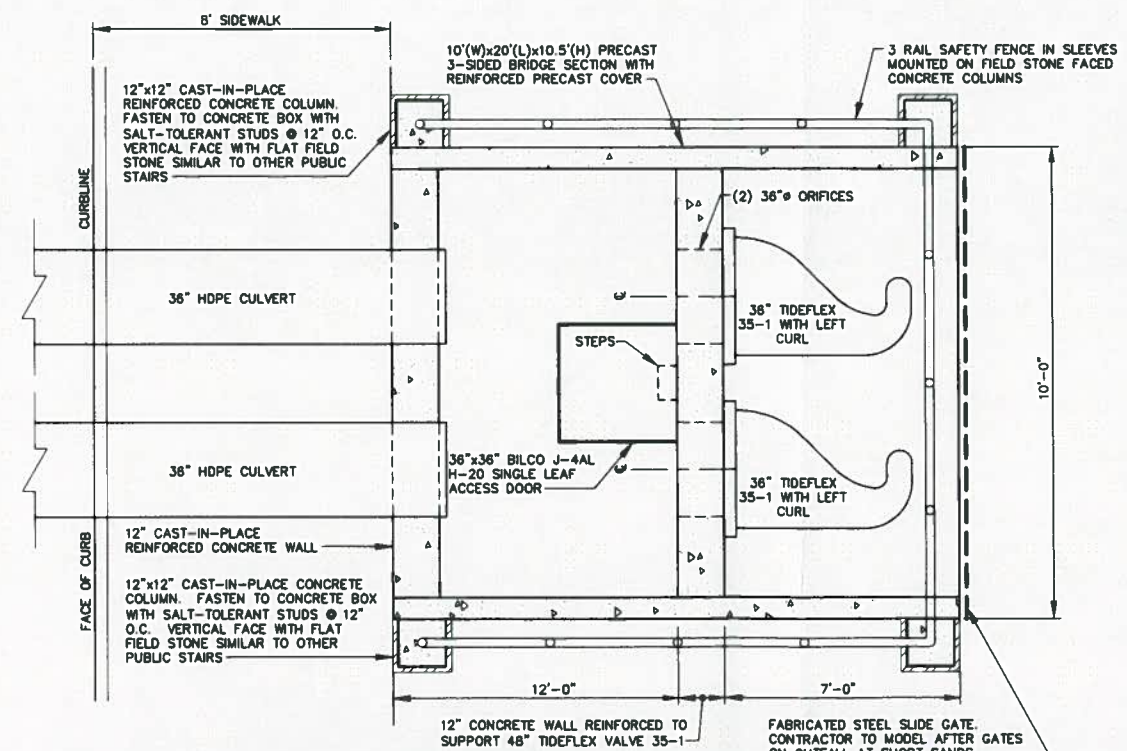

PLAN - OUTLET STRUCTURE @ OUTFALL J

NOT TO SCALE

Site:

LONG BEACH AVENUE IMPROVEMENTS

LONG BEACH AVENUE
YORK, MAINE

Prepared for:

TOWN OF YORK
188 YORK STREET
YORK, MAINE 03909

STATE OF MAINE
STEPHEN J. BRADSTREET
#5740
LICENSED
PROFESSIONAL ENGINEER

CIVIL ENGINEER:
STEPHEN J. BRADSTREET, PE #5740
400 COMMERCIAL STREET, SUITE 404
PORTLAND, ME 04101
207-772-2891

RANSOM
Consulting Engineers and Scientists
400 Commercial Street, Suite 404
Portland, ME 04101
Tel. (207) 772-2891
Fax (207) 772-3248
www.ransomenv.com

DETAILS

No.	Revision/Issue	Date
B	ISSUED FOR BIDS	1/29/16
A	PRELIMINARY REVIEW	08/31/15

Design by: MPM	Checked by: SJB
Drawn by: JAR	Approved by: SJB
	Date: MARCH 2015

C-104

Sheet 5 of 6

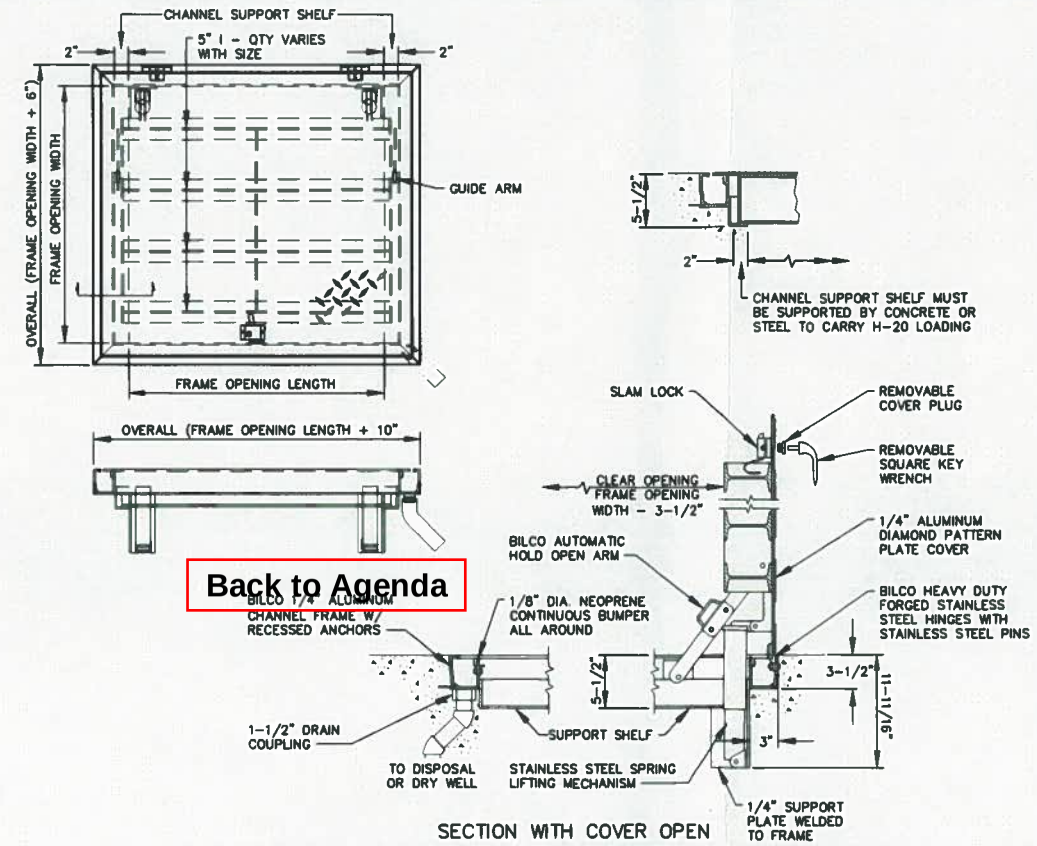

Back to Agenda

BILCO TYPE J-AL H-20 OUTLET STRUCTURE DOOR DETAIL

NOT TO SCALE

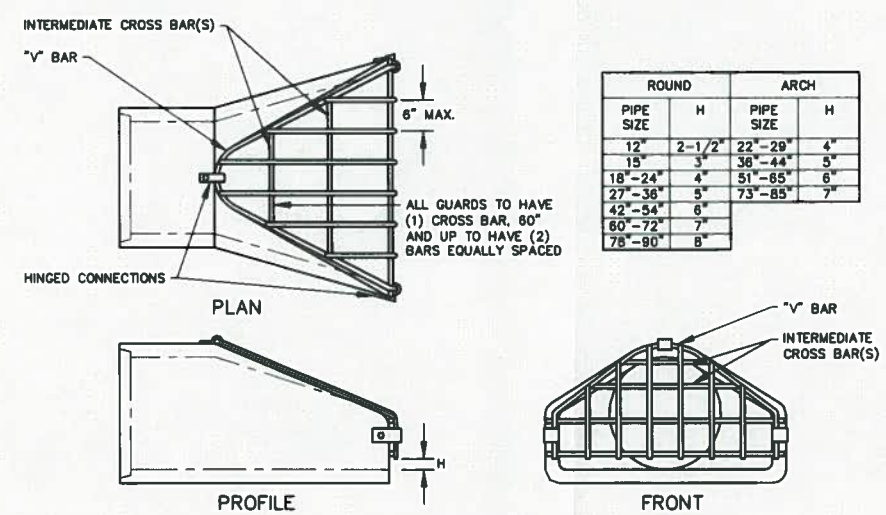

ROUND		ARCH	
PIPE SIZE	H	PIPE SIZE	H
12"	2-1/2"	22"-29"	4"
15"	3"	36"-44"	5"
18"-24"	4"	51"-65"	6"
27"-36"	5"	73"-85"	7"
42"-54"	6"		
60"-72"	7"		
78"-90"	8"		

HOT SIP GALVANIZED PER ASTM-A153.

STANDARD DESIGN				
	PIPE SIZE	HOLE DIA. REQ'D.	BOLT DIA.	BAR SIZE
ROUND	12"-24"	3/4"	5/8"	5/8"
	27"-48"	7/8"	3/4"	3/4"
	54"-90"	1-1/8"	1"	1"
ARCH	22"-29"	3/4"	5/8"	5/8"
	36"-59"	7/8"	3/4"	3/4"
	65"-88"	1-1/8"	1"	1"
BOLT LG. = PIPEWALL THK. + 2-1/2"				

HEAVY DESIGN				
	PIPE SIZE	HOLE DIA. REQ'D.	BOLT DIA.	BAR SIZE
ROUND	12"-24"	3/4"	5/8"	3/4"
	27"-48"	7/8"	3/4"	1"
	54"-90"	1-1/8"	1"	1-1/4"
ARCH	22"-29"	3/4"	5/8"	3/4"
	36"-59"	7/8"	3/4"	1"
	65"-88"	1-1/8"	1"	1-1/4"
ELLIPTICAL	14"x23"	3/4"	5/8"	3/4"
	19"x30"	3/4"	5/8"	3/4"
	24"x38"	7/8"	3/4"	3/4"
	29"x45"	7/8"	3/4"	3/4"
	34"x53"	7/8"	3/4"	3/4"
	38"x60"	7/8"	3/4"	3/4"
	43"x68"	1-1/8"	1"	1"
	48"x76"	1-1/8"	1"	1"
	53"x83"	1-1/8"	1"	1"

TRASH GUARD FOR FLARED ENDS BY HAALA INDUSTRIES

NOT TO SCALE

Site:

LONG BEACH AVENUE IMPROVEMENTS

LONG BEACH AVENUE
YORK, MAINE

Prepared for:

TOWN OF YORK
186 YORK STREET
YORK, MAINE 03909

STATE OF MAINE
STEPHEN J. BRADSTREET
#5740
LICENSED
PROFESSIONAL ENGINEER

CIVIL ENGINEER:
STEPHEN J. BRADSTREET, PE #5740
400 COMMERCIAL STREET, SUITE 404
PORTLAND, ME 04101
207-772-2891

RANSOM
Consulting Engineers and Scientists
400 Commercial Street, Suite 404
Portland, ME 04101
Tel. (207) 772-2891
Fax (207) 772-3248
www.ransomenv.com

DETAILS

No.	Revision/Issue	Date
B	ISSUED FOR BIDS	1/29/16
A	PRELIMINARY REVIEW	08/31/15

Design by: MPM
Checked by: SJB
Drawn by: JAR
Approved by: SJB
Date: MARCH 2015

C-105

Sheet 6 of 6

REQUEST FOR ACTION BY BOARD OF SELECTMEN

DATE SUBMITTED: February 18, 2016	☐ ACTION
DATE ACTION REQUESTED: February 29, 2016	☒ DISCUSSION ONLY
SUBJECT: Report of the Energy Steering Committee about Solarize York	

DISCUSSION OF OPTIONS AVAILABLE TO THE BOARD: The Energy Steering Committee (ESC) will introduce to the Board of Selectmen an effort to be known as Solarize York. If pursued, this would be a workshop, hosted by the Committee and delivered by a solar company, to provide information to homeowners, small businesses and farmers on solar installations and to make solar more accessible through bulk purchasing. The Town would issue an RFP seeking a solar company to deliver the workshop, and the Energy Steering Committee or a committee named by the Board of Selectmen would select the company. The ESC would publicize the workshop, provide meeting space and collect names of people who express interest in attending. Residents are free to work with the selected company or any other company; all arrangements are between the contractor and the property owners, but the Town helps by facilitating the process.

"Solarize" programs have been held in Massachusetts and more recently in Maine as a way to encourage solar installations and answer the questions York residents have asked the Committee, such as "How much does it cost?" "Who does this work?" and "Do I have a good site for solar?" A community discussion can create more interest in solar -- when neighborhoods do this together it can give them a financial advantage.

If the Board is interested in seeing this initiative move forward we can schedule time on an upcoming agenda for Board action to authorize the program and direct the Energy Steering Committee to undertake the required work.

RECOMMENDATION: none at this time

PROPOSED MOTION: none at this time

Prepared by Stephen H. Burns, Town Manager: _____

Back to Agenda

DRAFT

Solarize York

Request for Proposals from Solar Photovoltaic Installers

This Request for Proposals (RFP) is available online at:
yorkmaine.org

Please check online for updates prior to completing and submitting a bid.

All responses to this RFP must be sent electronically to Melissa Avery, York Town Assistant to Town Manager, mmavery@yorkmaine.org no later than 3:00pm **Friday, April 1, 2016**. All bids will be opened shortly after 3PM on Friday, April 1, 2016.

Installers may be asked to attend an in-person interview with a community selection committee during working hours the week of April 4-8, to be held in the York Town Offices, 186 York St, York, Maine, 03909. The Selection Committee's recommendation will be presented to the Board of Selectmen at their April 11, 2016 meeting. The town will notify the chosen contractor by April14, 2016.

Please direct questions or feedback regarding this RFP to Missy Avery, York Town Assistant to Town Manager, mmavery@yorkmaine.org
If there are questions about the Solarize project, please contact Hilary Clark, Energy Steering Committee, clarkhamel@aol.com

Back to Agenda

Table of Contents

3 **Program Summary**

Section One: Program Overview

4 A) Program Goals and Overview
5 B) The Solarize York Process
6 C) Program Partners and Roles
7 D) Timeline
7 E) Detailed Installer Commitment

Section Two: Application Process

9 A) Eligible Applicants
10 B) Application Deadline
10 C) In-Person Interviews
10 D) Questions and Contact Information
10 E) Guidelines for Installers Interested in Bidding as a Consortium

10 **Section Three: Proposal Requirements**

11 **Section Four: Evaluation Criteria**

Back to Agenda

Program Summary

The Town of York, Maine ("the Town" as represented by the Energy Steering Committee (ESC)) requests proposals from solar photovoltaic ("PV") installers ("installers") for solar PV installations in the Solarize York ("Solarize") program.

The Town will be collecting the names and email addresses of residents interested in learning more about solar and how a "bulk purchase" can bring the cost of installation down for everyone involved. All leads will be forwarded to the selected Solarize installer. This partnership is designed to lower customer acquisition costs and transfer savings directly to customers. The Town seeks proposals from installers who can provide competitive tiered pricing for a direct-ownership model for solar PV installations at private residences. While this program is primarily for residences, small farm enterprises and small businesses are also welcome to participate. Given the potential complexity that farm and small business installations may create, the Town cannot guarantee that small farms and businesses will be eligible for the special pricing.

The Town's role is to bring property owners interested in investing in solar power together and to identify an installer or group of installers to get the job done at a lower cost to residents. The Energy Steering Committee may be able to identify opportunities for financing including PACE loans through Efficiency Maine. The Town is not, in any way, providing a financial incentive for participation.

A consortium consisting of more than one installer may bid collectively on this proposal, as long as the partnering installers take responsibility for managing the partnership and maintaining a simple message and point of contact for residents. Relevant experience, quality and value of services and equipment, capacity for implementation of the Solarize program, proposed pricing, and unique or creative offerings will be factors in the selection process.

The purpose of Solarize York is to increase the rate of solar use.

Solarize York was inspired by similar programs in Freeport & Brunswick, Maine, New Hampshire, Massachusetts and Connecticut.

Back to Agenda

SECTION ONE – Program Overview

A. Program Goals and Overview

i. Program Goals

Solarize York is aimed at making residential solar PV energy more accessible to residents. The goals of Solarize are to:

1) Lower the cost of solar energy by reducing customer acquisition costs and transferring those savings directly to residents; and
2) At least double the number of residential solar installations in the community over the course of this project.

ii. Program Overview

Solarize York (herein Solarize) is designed to overcome common barriers to going solar at a residential scale:

A) Consumer Confidence

- Solarize is designed to bring residents interested in solar energy together, provide them with information, competitive pricing and an easy start, and take the next step when they're ready (e.g. a free site visit, signing a contract to go solar).
- Solarize is designed to be as transparent as possible. All Solarize pricing is posted online, along with details about the Solarize program, and lists of other installers in our area.

B) Cost

- Outreach done by the Town helps reduce typical customer acquisition costs and can lead to numerous installation jobs for the selected installer. These factors help installers bidding on Solarize York to offer competitive pricing, often discounted below their typical installation prices. Their pricing is also tiered, meaning the cost goes down for everyone as more residents sign up to go solar.
- Financing may be necessary to make solar feasible for many residents. A list of known financing options will be prepared by the ESC and distributed on an as needed basis. Any financing options that an installer has to offer should be described in the Company Profile narrative (Form B-1, page 2)

C) Inertia

- A critical component of any Solarize program is its deadline. Residents must sign a contract with the partner installer by a certain date in order to take advantage of the special tiered pricing offer. This deadline helps motivate residents to take action.
- The tiered pricing structure serves as a motivator for residents to talk with their neighbors about Solarize and encourage one another to take action. More neighbors going solar mean lower prices for everyone.

Back to Agenda

B. The Solarize York Process

The Town will create a small installer selection review committee (ESC) including an independent technical consultant if possible to help throughout the selection process. See Page 11 for evaluation criteria.

In the event that a bid is found to be incomplete, or the selection committee has a question or request, the bidding installer may be notified and given three business days to respond.

The selection committee may invite one or more installers for an interview (likely during the week of April 4-8, 2016.

The Town expects installers to submit competitive and realistic bids. Bidding installers should not sacrifice their bottom line or the quality of their equipment and services in order to participate in this program. The equipment and services included as part of the tiered pricing proposal should be representative of a typical roof-mount system. Cost adders should truly be adders, not commonly required components. Cost adders can also include options that would reduce system cost. For homes that aren't candidates for solar installation, the Town expects the selected installer to work with the Town in identifying a potential site for a solar farm.

Program Implementation

The Town expects the selected installer to hold at least 2 informational meetings with potential solar customers. The town will advertise these meetings using their list of residents interested in learning more about solar as well as other forms of communication such as the town newsletter, public access TV, and local news publications. The town will provide the location for the meeting. Once the installer and potential solar users are brought together, the town will no longer be involved.

Solarize York is meant to catalyze many small-scale residential solar installations. Any resident of York can contact the selected installer to receive a site visit and quote (at no charge) based on the equipment and special tiered pricing outlined in the installer's bid. Residents must sign a contract with the selected installer by the program deadline in order to be eligible.

<u>Residents of York are free to seek bids and work with other installers, and non-Solarize installers are free to continue marketing and doing business in York.</u> The town will be open with the public about the installer selection process and the fact that the Solarize partnership in no way limits customer choice. Competition among installers during the Solarize campaign is expected and typically healthy. Any installations contracted during the Solarize program with non-Solarize installers will *not* be counted as progress toward the tiered pricing established by the Solarize installer.

<u>The town is committed to working with small businesses and farm enterprises</u> as well as residents. If there is a known demand for solar installations for farms and small businesses, the

Back to Agenda

town will organize a forum to address unique challenges and opportunities for each group with respect to going solar. Installers will be expected to work with farms and small businesses, and be familiar with any unique incentives or tax considerations available to these potential customers. Any of these small businesses and farms that participate will count toward the tiered system of pricing. Installers may establish limitations in size or other aspects of a potential system for small businesses and farms. If so, that information should be included in Form C- Core Solarize proposal.

Installer

The partner installer (or consortium of installers) will offer transparent and competitive tiered pricing, collaborate with the town on outreach and lead tracking throughout the program, and provide Solarize customers with a turnkey inquiry-to-installation process that will make them want to encourage their neighbors to go solar too. Detailed installer responsibilities are outlined in the following pages.

The following chart outlines specific partner roles and responsibilities:

	Town of York	Installer
Securing Solarize Partners	• Release RFP to installers; facilitate the installer selection process • Using various communication resources, make residents aware of Solarize York and maintain a list of residents interested in participating • Evaluate installer proposals and select a partner installer • Work with local lenders and Efficiency Maine to identify low cost loan options	• Submit competitive bids
Reduce Cost to Customer	• Provide online resources and handouts detailing available incentives and financing options	• Free site visits • Competitive, tiered pricing • Help customers understand and apply for available incentives • Assist customers in assessing purchase / financing options
Marketing/ Outreach/ Education	• Manage website as a central resource for program info • Provide updates to residents who have asked to be included in the program • Attend and support key community outreach events	• Prepare a presentation for the Solarize launch event • Answer technical questions from residents • Optional: supplement community outreach (e.g. direct mail, yard signs, etc.)

Back to Agenda

Web and Media	• Communications and media strategy/support • Manage attention from regional media outlets	• Develop, provide and manage a Solarize York website • Provide relevant information for the Solarize York website, and link to the Solarize website on the installer's website • Cooperate with partners to provide content (e.g. photos, stories) and accommodate media
Leads/ Installs	• Participate in bi-weekly check-in calls	• Provide site assessments, system design, and turnkey installation • Participate in bi-weekly check-in calls
Admin/ Tracking	• Receive and manage bi-weekly reports from installers • Track leads generated from website form(s) • Ensure all partners have access to up-to-date contacts	• Track leads and contracts

C. Timeline

RFP for Installers: Released March 1, 2016
RFP for Installers: Due April 1, 2016, 3pm
Community selection committee and an independent technical consultant to review proposals and to hold interviews with installers (if deemed necessary) April 4-8, 2016
Installer selected April 11, 2016
Solarize Launch Events April 15- May 22, 2016
Deadline to sign a contract with installer to receive special pricing August 31, 2016
Expected program finish date - depending on number of contracts signed
Survey Solarize York participants (customers and installer(s)) within 2 months of end of program

D. Detailed Installer Commitment

Collaboration with the Town

a. Participate in bi-weekly calls with the Town;
b. Participate in community events throughout the program where appropriate (participation at the launch event is required);

Back to Agenda

c. Collaborate with the Town on press releases; developing additional marketing materials, including (but not limited to) providing or helping to obtain photographs, statements of support, testimonials, or other information for use in Solarize marketing;
d. Collaborate with the Town to recommend alternative opportunities, where appropriate (i.e., through solar farms or other renewable energy projects such as pellet stoves), for interested residents without feasible sites for a solar PV project;
e. At the end of the program, meet with the Town and provide feedback, including insights about customer decision-making process, motivations to install or not install solar, suggested program improvements, and the efficiency of different outreach strategies.

Ownership and Pricing

a. Provide a dollar per watt ($/W) purchase price for a typical, all-inclusive, roof-mount installation that will decrease by tier levels as the total contracted capacity of solar PV within the community increases (see Form E). Tier levels shall be determined by the install;
b. Provide a list of additional system features (see Form E) which may be preferred or required in some (but not the majority of) cases and would impact the final project cost. This list of adders and associated costs will be published with other pricing information;
c. Provide all customers within the community with pricing at the appropriate tiered level. Any contract between the installer and the customer must acknowledge the current tier price and lay out a process through which the final system cost will be adjusted and reconciled to reflect the community's final tier price after the program deadline. The contract must also include a guarantee that the work will be completed as proposed along with a remedy if the work can't be completed.

Marketing Materials, Presentations, and Claims Made Throughout the Program

a. All partners must refer to the Program as "Solarize York" in all community outreach materials and marketing efforts, and direct individuals interested in participating in the Program to Hilary Clark , ESC
b. All installers must ensure that any media they produce does not claim to represent the opinion or position of the Town of York;
c. All installers must use a reasonable escalator rate for predicted utility price in all marketing and in predicting payback periods, and make clear that all figures are based on given assumptions;
d. All installers must use an average current utility rate based on current electricity rates (including any increases that have been approved by the Maine Public Utilities Commission) in the area in all marketing and make clear that rates are based on averages;
e. All claims regarding federal tax credits should include a suggestion to contact a tax professional;

Tracking

Back to Agenda

a. Installers must track the pricing associated with each project, detail why a specific project requires additional costs (if applicable), and provide all information regarding final project cost and composition to the Town at the end of the program;
b. Installers must provide the Town with regular tracking reports (at minimum every other week);
c. Installers will communicate to all leads verbally at the time of the site visit that their contact information and project status will be shared with the Town unless the customer requests otherwise. It is only for the purpose of measuring the success of the project and to calculate the savings to residents by participating in the program;
d. Installers will notify the Town of any leads who, at any point in the program, request their information not be shared.

Customer Service

a. Installers will provide links to the Town of York website (www.yorkmaine.org) where appropriate on the installer's website;
b. Installers will provide appropriate Solarize customer contact information to be posted on Solarize marketing materials and web pages;
c. Installers will contact all customers who request a site visit or submit an inquiry within two business days;
d. Installers will make every attempt to complete site visits with Solarize leads within two weeks of first contact, and will clearly communicate with leads about the expected timeline and any changes in that timeline;
e. Installers will provide objective information to enable customers to choose among any solar financing options offered or otherwise available;
f. Installers will work with customers to identify and apply for available incentives, and all Solarize projects applying for incentives must meet requirements for incentive eligibility;
g. Installers will maintain high standards of quality and value when presenting proposals to Solarize leads and aim to design high-efficiency systems;
h. Installers will be familiar with and comply with all relevant codes and requirements, at the local, state, and federal level, for all installations to be completed through the Solarize program;
i. Installers must outline and be prepared to enact a contingency plan in the event that the customer service expectations described are not being met (as determined by the Town) due to an increased volume of leads or any other reason.

SECTION TWO – Application Process

A. Eligible Applicants

In order for an installer to be eligible to submit a proposal, the installer must:

Back to Agenda

a. Demonstrate experience and proficiency in solar PV installations, be a NABCEP certified installer, and have at least (1) one master electrician on staff.
b. Submit a proposal that meets all of the threshold review criteria outlined in Section Four.

B. Application Deadline

Responses to this RFP must be received by the Town of York no later than **3:00pm on Friday, April 1, 2016**. Proposals should be in PDF format and attached to an email sent to Missy Avery at mmavery@yorkmaine.org. Please label your proposal materials clearly. Missy can be contacted directly at 363-1000 x.1-2, if you have any questions, concerns, or technical difficulties in submitting your proposal.

C. In-Person Interviews

Depending on the RFPs received, the Town may opt to interview prospective installers. If so, the interviews will be held at the York Town Offices, the week of April 4-8, 2016 between 9am and 5pm (specific day and times to be determined).

D. Questions and Contact Information

Please contact Missy Avery, Assistant to Town Manager, with any questions (contact information below).

Missy Avery
mmavery@yorkmaine.org
(207) 363-1000 x1 then x2

Hilary Clark
clarkhamel@aol.com

E. Guidelines for Installers Interested in Bidding as a Consortium

A consortium consisting of more than one installer may bid collectively as long as the partnering installers take responsibility for managing the partnership and maintaining a simple message and point of contact for residents. Partnering installers should strive to maintain the following critical program components:

- A single lead contact person for the partnering installers is identified;
- A single tiered pricing structure, or a pricing structure that is otherwise simple for potential customers to understand; and
- Protocols are established with regard to the shared responsibility and assignment of individual projects to participating installers. Partnering installers take full responsibility for managing their relationship. The Town will be focused on gathering leads and cannot be expected to manage relationships between multiple installers.

Back to Agenda

SECTION THREE – Proposal Requirements

Required Forms to be completed:

A. **Installer Contact Information – Form A** (If applying as a consortium, complete only one form on behalf of the group)

B. **Company Profile Forms B-1 and B-2** (If applying as a consortium, each partner installer must complete a separate form)

C. **Core Solarize Proposal Form C** (If applying as a consortium, complete only one form on behalf of the group)

D. **Equipment and Pricing Proposal Form D** (If applying as a consortium, complete only one form on behalf of the group)

E. **Authorized Signature Form Form E** (If applying as a consortium, complete only one form on behalf of the group)

The forms listed above are available online at yorkmaine.org

Required Attachments:

- ☐ **Sample Solarize customer contract (for a residential system)**
- ☐ **Sample Solarize customer proposal (for a residential system)**
- ☐ ***(if applicable)* Sample terms for any lease/ or other financing options offered**
- ☐ ***(if applicable)* Explanation of any lease or financing options offered and how they will be incorporated into the program, particularly with respect to the tiered pricing model.**

SECTION FOUR – Evaluation Criteria

Threshold Requirements: The Town will review all bids for completeness prior to forwarding bids to the selection committees. If the Town finds any bid to be incomplete, the installer will be notified and given three business days to produce any missing information. Bids will be considered complete if each of the required forms is present and completed, and each of the required attachments is present (see Proposal Requirements in Section 3 above).

Evaluation Criteria: Complete bids will be evaluated by a selection committee (ESC plus technical person) selected by the York Board of Selectmen. An independent technical consultant will be available to support the group. Selection of an installer will be based on the following criteria:

- **Relevant experience** of the installer company and its staff;

Back to Agenda

- **Overall quality and value** of the proposed services and equipment;
- **Solarize implementation** – the installer's ability to provide timely and high-quality customer service and installation services given the expected volume of leads generated by Solarize outreach, as well as to collaborate with community volunteers;
- **Tiered pricing** and cost adders proposed by the installer are clear and offer good value;
- **Unique or creative offerings** – e.g. unique technologies offered, unique business model, creative outreach ideas;
- **Commitment to growing the use of solar in York** – see below.

The goal of Solarize York is to increase the rate of adoption of solar in York, and to sustain that momentum beyond the timeframe of this program. Strong installer partners will demonstrate commitment to building the market for solar energy beyond their participation in Solarize. In determining an installer's ability to continue solar installations after the project, the following will be considered:

- Does the installer have a history of solar installations in the York area?
- Has the installer demonstrated a commitment to growing a strong market for solar in York throughout and beyond the Solarize program?
- Are any relevant members of the installer team based in the York area?
- How far will the installer have to drive to reach York?
- Where is the installer's business headquarters located?

Back to Agenda

SOLAR OPEN HOUSE

AT THE PLANTE RESIDENCE

71 ROSSMORE ROAD IN BRUNSWICK, MAINE

SATURDAY NOV 7, 2015 // 9:00-10:30 AM

Come learn how solar can work for you, the homeowner! Join us for light refreshments and a tour of the Plante's solar energy system that powers their home. This is a great opportunity to get answers to questions regarding the cost of solar, your return on investment, solar heating systems and how they operate in our Northeast climate.

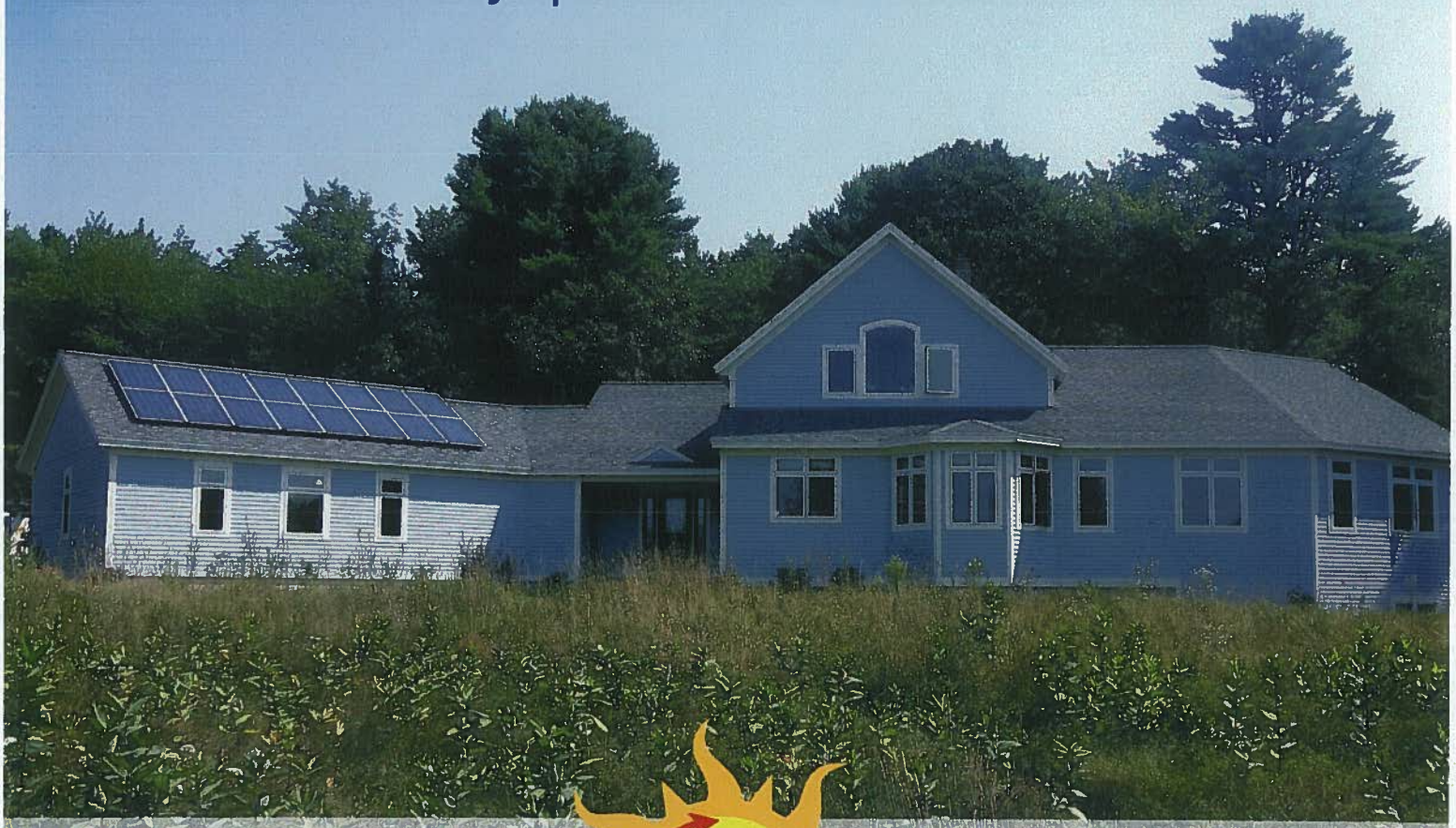

ReVisionEnergy.com

ReVision Energy

207.221.6342

Back to Agenda

Pricing: Open now through January 31, 2016

	TIER 1	TIER 2	TIER 3	TIER 4	TIER 5
Tier bracket in kilowatts	0 - 49 kilowatts	50 - 99 kilowatts	100 - 149 kilowatts	150 - 199 kilowatts	200+ kilowatts
Price after cash discount (Upfront purchase or using financing other than ReVision's Own Your Power Loan)	$3.15/watt	$3.12/watt	$3.09/watt	$3.06/watt	$3.03/watt
Average Savings on a 5 kilowatt system		$150	$300	$450	$600

SOLARIZE Brunswick

ReVision Energy

Back to Agenda

ReVision Energy

SOLARIZE BRUNSWICK

Join us to learn more about Solarize Brunswick, a group purchasing intitative for solar! ReVision Energy staff will be on hand to schedule site evaluations and discuss preliminary system designs. We encourage people to bring a copy of their CMP bill to get them started.

Thursday Oct 15 // 7:30 - 10 PM
Saturday Oct 17 // Noon - 3 PM
Morrell Meeting Room in the Curtis Memorial Library, 23 Pleasant Street in Brunwick, Maine

ReVisionEnergy.com // 207.221.6342

Back to Agenda

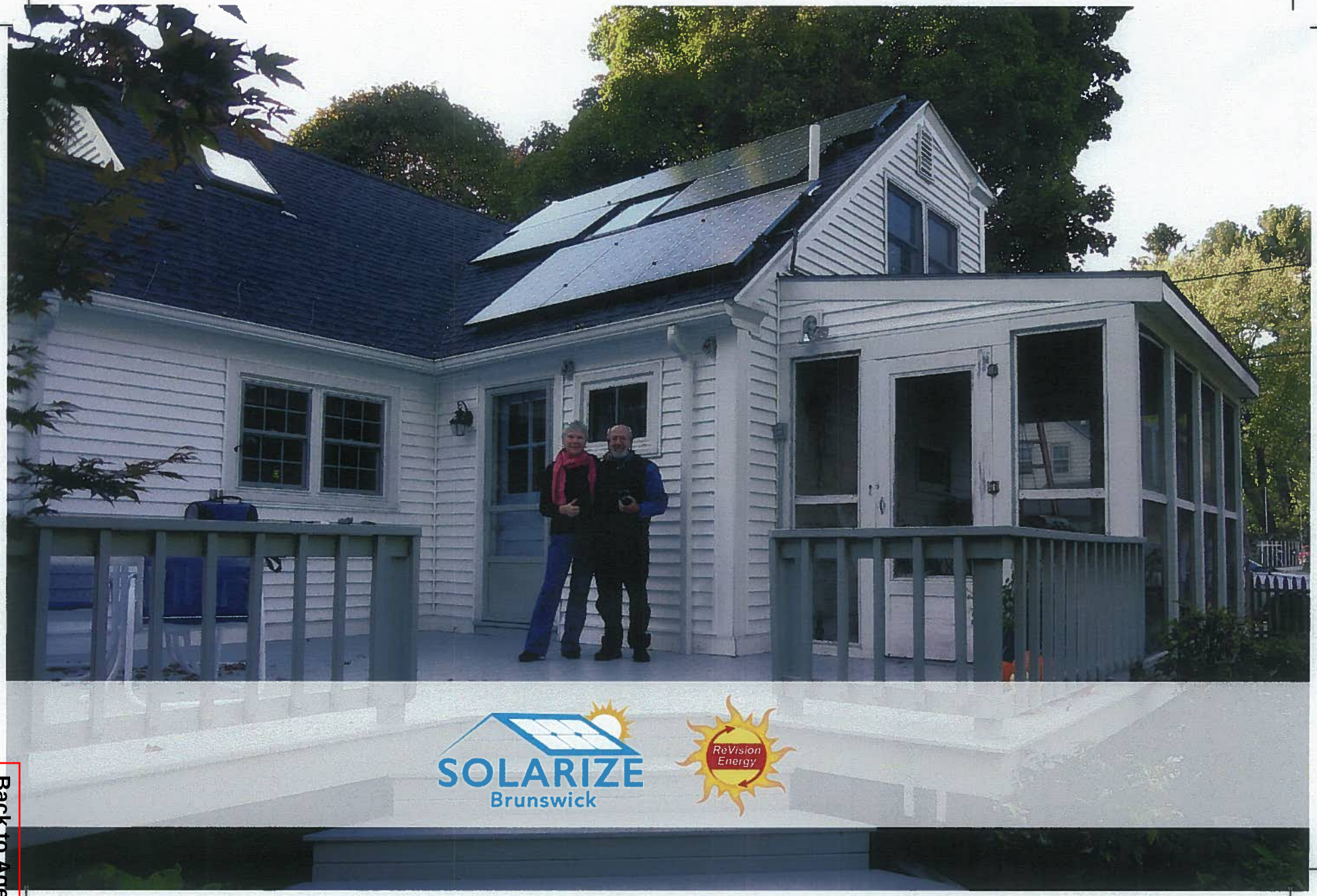

Back to Agenda

SOLARIZE
Brunswick

ReVision Energy

Thank you for scheduling a free site evaluation!

Date:

Time:

Meeting with:

@revisionenergy.com

Back to Agenda

Notice of Public Hearing
Board of Selectmen
Monday, February 29, 2016
7:00 PM
York Public Library

The York Board of Selectmen will conduct a Public Hearing regarding proposed zoning ordinance amendments to be potentially considered at the May 21, 2016 Special General Referendum as follows:

1. York Village Center Zoning Districts
2. York Village Affordable Elderly Housing Overlay District Expansion

Printed copies of the proposed amendments (draft document dated February 4, 2016) and associated maps are available with the Town Clerk at the Town Hall, and digital copies are available on the Town's Web page (www.yorkmaine.org).

Back to Agenda

Notice of Public Hearing
Board of Selectmen
Monday, February 29, 2016
7:00 PM
York Public Library

The York Board of Selectmen will conduct a Public Hearing regarding a proposed ordinance amendment to be potentially considered at the May 21, 2016 Special General Referendum as follows:

1. Business Licensing Ordinance

Printed copies of the proposed amendment (draft document dated October 27, 2015) are available with the Town Clerk at the Town Hall, and a digital copy is available on the Town's Web page (www.yorkmaine.org).

Back to Agenda

PUBLIC HEARING NOTICE

Town of York – Board of Selectmen
February 29, 2016
7:00PM
York Public Library

The Town of York Board of Selectmen will hold a Public Hearing on February 29, 2016 regarding a new Business License Application submitted for the following:

- Kenneth Churchill DBA: Cowboy Café, Inc. (Liquor and Special Amusement); located at 4 Bog Road

Back to Agenda

REQUEST FOR ACTION BY BOARD OF SELECTMEN

DATE SUBMITTED: February 26, 2016	☒ ACTION
DATE ACTION REQUESTED: February 29, 2016	☐ DISCUSSION ONLY
SUBJECT: Business License Applications	

DISCUSSION OF OPTIONS AVAILABLE TO THE BOARD: All appropriate departments have given approval; See "Department Approvals" on page two of each application.

RECOMMENDATION: Approve the Business License(s) attached.

PROPOSED MOTION: I move to approve the following licenses:

- *Kenneth Churchill DBA: Cowboy Café (Liquor, Special Amusement); located at 4 Bog Road*
- *Qing Wen Wang DBA: Greenleaves Chinese Restaurant, Inc. (Food Service, Liquor); located at 647 US Route One*
- *Andrew and Susan Wetzel DBA: Inn at Tanglewood Hall (Bed and Breakfast); located at 611 York Street*
- *York Village Emporium DBA: Berger's Bike Shop and Ice Cream (Food Service); located at 241 York Street*
- *Cliff Realty Corporation DBA: Cape Neddick Country Club (Food Service, Liquor, Special Amusement); located at 650 Shore Road*
- *York Village Hotels, LLC DBA: Microtel Inn and Suites (Innkeeper and Food Service); located at 6 Market Place Drive*

All subject to taxes, fees and inspections being current and compliant with the usual noise stipulations.

PREPARED BY: _____ REVIEWED BY: _____

Melissa M. Avery, Assistant to the Town Manager

Back to Agenda

THE TOWN OF

YORK, MAINE

186 York Street, York, Maine 03909

BUSINESS LICENSE APPLICATION

NOTE: Business Licenses are not transferable to another person, business or location.

Business Name: Cowboy Cafe Inc.

Street Address: 4 Bog Rd. (2 Churchill Ct. York, Maine) 03909

Business Owner: Kenneth Churchill

Mailing Address: 1 Churchill Ct
York, Maine 03909

Phone Number: 617-407-6096

E-mail Address: Churchillrodeo@yahoo

Business Manager: Kenneth Churchill

Mailing Address: "

Phone Number: "

E-mail Address: "

Please indicate who is to be the Primary Contact with the Town: ☐ OWNER or ☐ MANAGER

Is the Business Owner same as the prior year? ☐ YES ☐ NO

Please indicate which Licenses or Local Approvals you seek:

Lodging:

___ Bed and Breakfast License (C/F)
___ Innkeeper License (C/F)
Number of Rooms: ____

Entertainment:

✓ Special Amusement License (F/P)
___ Dance Hall License (F/P)
___ Bowling Alley License (F)
___ Coin-Operated Amusement License (P)
___ Bingo, Beano and Games of Chance

Food and Beverage:

___ Food Service License (C/F)
✓ Liquor License (F/P)
___ Bottle Club License (F/P)
Number of Seats: 75

Miscellaneous:

___ Transient Seller's License
___ Flea Market License
___ Junkyard, Auto Graveyard/Recycling License
___ Other: _____

C – Code Enforcement Inspection Required F – Fire Department Inspection Required P – Police Department Inspection Required

Code Enforcement: (207) 363-1002 Police Department: (207) 363-1031

Village Fire Department: (207) 363-1015 Beach Fire Department: (207) 363-1014

FEES: Each application will incur a $60 fee, plus $30 for each license after the first. All NEW applications will have an additional $50 fee, and all license amendments will have a $25 fee. All fees are to be paid at time of submittal and shall be non-refundable. Cash or Check only; Please make check payable to Town of York.

Back to Agenda

Provide the following information about any relevant State licenses:

STATE LICENSE INFORMATION			
ID Number(s):			
Expiration Date(s):			
Classification(s):			

Please read the following and sign to complete your application:

I understand that a license is required before operating or conducting any business or activity governed by the Town's Business Licensing Ordinance and that ongoing compliance with the provisions of the Town's Business Licensing Ordinance and other applicable Town codes is required throughout the entire license period.

I understand that this Business License Application must be filled out completely, all fees must be paid, and all necessary department inspections must be completed and passed before the license(s) will be considered by the Board of Selectmen.

Business Owner: _____ Have you ever been convicted of a Felony? YES (NO)
Signature

Business Manager: _____ Have you ever been convicted of a Felony? YES (NO)
Signature

(If either person has a Felony conviction, please attach an explanation of the circumstances)

FOR OFFICE USE ONLY

FEES	Amount	Map – Lot: 0090 - 0083-5
Application and First License ($60)	60.—	Processed By: mmavery
Subsequent Licenses ($30 each)	30.—	Received Date: 1/25/16
New License Fee ($50)	50.—	Amount Received: $ 140.00
License Amendment ($25)	—	Check # 1216 or Cash ☐
Other: _____	—	
TOTAL DUE	$ 140.00	LICENSE #: _____ - _____

Department Approvals		Date of Approval	Special Conditions (Attached if Necessary)
Code Enforcement	__ N/A	2/11/16 A. Harrison	YES (NO)
Fire	__ N/A		YES NO
Police	__ N/A	2/16/16 O Davis	(YES) NO
Tax Collector	__ N/A		YES NO
Board of Selectmen	_____ *Town Manager for the Board of Selectmen* _____ *Date*		YES NO

Back to Agenda

THE TOWN OF

YORK, MAINE

186 York Street, York, Maine 03909

BUSINESS LICENSE APPLICATION

NOTE: Business Licenses are not transferable to another person, business or location.

Business Name: Greenleaves Chinese Restaurant, Inc.

Street Address: 647 US Rt. 1 - Unit #3

Business Owner: Qing Wen Wang

Mailing Address: 3 Sparrow Lane

York, ME 03909

Phone Number: (207) 363-2025

E-mail Address:

Business Manager:

Mailing Address:

Phone Number:

E-mail Address:

Please indicate who is to be the Primary Contact with the Town: [X] OWNER or [ ] MANAGER

Is the Business Owner same as the prior year? [X] YES [ ] NO

Please indicate which Licenses or Local Approvals you seek:

Lodging:

___ Bed and Breakfast License (C/F)
___ Innkeeper License (C/F)
Number of Rooms: ____

Food and Beverage:

X Food Service License (C/F)
X Liquor License (F/P)
___ Bottle Club License (F/P)
Number of Seats: 50

Entertainment:

___ Special Amusement License (F/P)
___ Dance Hall License (F/P)
___ Bowling Alley License (F)
___ Coin-Operated Amusement License (P)
___ Bingo, Beano and Games of Chance

Miscellaneous:

___ Transient Seller's License
___ Flea Market License
___ Junkyard, Auto Graveyard/Recycling License
___ Other: _____

C – Code Enforcement Inspection Required F – Fire Department Inspection Required P – Police Department Inspection Required

Code Enforcement: (207) 363-1002

Police Department: (207) 363-1031

Village Fire Department: (207) 363-1015

Beach Fire Department: (207) 363-1014

FEES: Each application will incur a $60 fee, plus $30 for each license after the first. All NEW applications will have an additional $50 fee, and all license amendments will have a $25 fee. All fees are to be paid at time of submittal and shall be non-refundable. Cash or Check only; Please make check payable to Town of York.

Back to Agenda

Provide the following information about any relevant State licenses:

STATE LICENSE INFORMATION			
ID Number(s):	5578		
Expiration Date(s):	03/31/2016		
Classification(s):	Class A		

Please read the following and sign to complete your application:

I understand that a license is required before operating or conducting any business or activity governed by the Town's Business Licensing Ordinance and that ongoing compliance with the provisions of the Town's Business Licensing Ordinance and other applicable Town codes is required throughout the entire license period.

I understand that this Business License Application must be filled out completely, all fees must be paid, and all necessary department inspections must be completed and passed before the license(s) will be considered by the Board of Selectmen.

Business Owner: _____ Have you ever been convicted of a Felony? YES (NO)
Signature

Business Manager: _____ Have you ever been convicted of a Felony? YES / NO
Signature

(If either person has a Felony conviction, please attach an explanation of the circumstances)

FOR OFFICE USE ONLY

FEES	Amount	Map – Lot: 0091 - 0008-W
Application and First License ($60)	60.—	Processed By: mmavery
Subsequent Licenses ($30 each)	30.—	Received Date: 2/9/2016
New License Fee ($50)	—	Amount Received: $ 90.00
License Amendment ($25)	—	Check # 12166 or Cash ☐
Other: _____	—	
TOTAL DUE	$ 90.—	LICENSE #: _____ - _____

Department Approvals		Date of Approval	Special Conditions (Attached if Necessary)
Code Enforcement	__ N/A	2/12/16 K Newell	YES (NO)
Fire	__ N/A	2/14/16 D.Apgar	YES (NO)
Police	__ N/A	2/17/16 O Davis	YES (NO)
Tax Collector	__ N/A		YES NO
Board of Selectmen	_____ *Town Manager for the Board of Selectmen*	_____ *Date*	**YES NO**

Back to Agenda

THE TOWN OF

YORK, MAINE

186 York Street, York, Maine 03909

BUSINESS LICENSE APPLICATION

NOTE: Business Licenses are not transferable to another person, business or location.

Business Name: Inhat Tanglewood Hall

Street Address: 611 York Street York Harbor 03911

Business Owner: Andrew + Susan Wetzel Business Manager:

Mailing Address: PO Box 490 Mailing Address:

York Harbor, ME 03911

Phone Number: 351.1075 Phone Number:

E-mail Address: tanglewood@maine.rr.com E-mail Address:

Please indicate who is to be the Primary Contact with the Town: ☒ OWNER or ☐ MANAGER

Is the Business Owner same as the prior year? ☒ YES ☐ NO

Please indicate which Licenses or Local Approvals you seek:

Lodging:

X Bed and Breakfast License (C/F)
___ Innkeeper License (C/F)
Number of Rooms: 6

Food and Beverage:

___ Food Service License (C/F)
___ Liquor License (F/P)
___ Bottle Club License (F/P)
Number of Seats: ___

Entertainment:

___ Special Amusement License (F/P)
___ Dance Hall License (F/P)
___ Bowling Alley License (F)
___ Coin-Operated Amusement License (P)
___ Bingo, Beano and Games of Chance

Miscellaneous:

___ Transient Seller's License
___ Flea Market License
___ Junkyard, Auto Graveyard/Recycling License
___ Other: ___

C – Code Enforcement Inspection Required F – Fire Department Inspection Required P – Police Department Inspection Required

Code Enforcement: (207) 363-1002 Police Department: (207) 363-1031

Village Fire Department: (207) 363-1015 Beach Fire Department: (207) 363-1014

FEES: Each application will incur a $60 fee, plus $30 for each license after the first. All NEW applications will have an additional $50 fee, and all license amendments will have a $25 fee. All fees are to be paid at time of submittal and shall be non-refundable. Cash or Check only; Please make check payable to Town of York.

Back to Agenda

Provide the following information about any relevant State licenses:

STATE LICENSE INFORMATION			
ID Number(s):	7387		
Expiration Date(s):	04/13/2016		
Classification(s):	B&B Lodging		

Please read the following and sign to complete your application:

I understand that a license is required before operating or conducting any business or activity governed by the Town's Business Licensing Ordinance and that ongoing compliance with the provisions of the Town's Business Licensing Ordinance and other applicable Town codes is required throughout the entire license period.

I understand that this Business License Application must be filled out completely, all fees must be paid, and all necessary department inspections must be completed and passed before the license(s) will be considered by the Board of Selectmen.

Business Owner: _____ Have you ever been convicted of a Felony? YES / NO
Signature

Business Manager: _____ Have you ever been convicted of a Felony? YES / NO
Signature

(If either person has a Felony conviction, please attach an explanation of the circumstances)

FOR OFFICE USE ONLY

FEES	Amount	Map – Lot: 0046 - 0054
Application and First License ($60)	60.—	Processed By: mmavery
Subsequent Licenses ($30 each)	—	Received Date: 2/11/2016
New License Fee ($50)	—	Amount Received: $ 60.—
License Amendment ($25)	—	Check # 1060 or Cash ☐
Other: _____	—	LICENSE #: _____ - _____
TOTAL DUE	$ 60.—	

Department Approvals		Date of Approval	Special Conditions (Attached if Necessary)
Code Enforcement	__ N/A	2/22/16 KNewell	YES NO
Fire	__ N/A	2/20/16 DApgar	YES NO
Police	X N/A		YES NO
Tax Collector	__ N/A	2/16/16 MSzeniawski	YES NO
Board of Selectmen	*Town Manager for the Board of Selectmen*	*Date*	YES NO

Back to Agenda

THE TOWN OF

YORK, MAINE

186 York Street, York, Maine 03909

BUSINESS LICENSE APPLICATION

NOTE: Business Licenses are not transferable to another person, business or location.

Business Name: York Village Emporium / DBA Berger's Bike Shop & Ice Cream.

Street Address: 241 York Street Ste 1

Business Owner: Arthur & Scott Berger

Mailing Address: 241 York St
York Me

Phone Number: 207-363-4070

E-mail Address: SAB3964@aol.com

Business Manager: —

Mailing Address: Same

Phone Number: 207-351-1104

E-mail Address: —

Please indicate who is to be the Primary Contact with the Town: ☒ OWNER or ☐ MANAGER

Is the Business Owner same as the prior year? ☒ YES ☐ NO

Please indicate which Licenses or Local Approvals you seek:

Lodging:

___ Bed and Breakfast License (C/F)
___ Innkeeper License (C/F)
Number of Rooms: ____

Food and Beverage:

X Food Service License (C/F)
___ Liquor License (F/P)
___ Bottle Club License (F/P)
Number of Seats: ____

Entertainment:

___ Special Amusement License (F/P)
___ Dance Hall License (F/P)
___ Bowling Alley License (F)
___ Coin-Operated Amusement License (P)
___ Bingo, Beano and Games of Chance

Miscellaneous:

___ Transient Seller's License
___ Flea Market License
___ Junkyard, Auto Graveyard/Recycling License
___ Other: _____

C – Code Enforcement Inspection Required F – Fire Department Inspection Required P – Police Department Inspection Required

Code Enforcement: (207) 363-1002 Police Department: (207) 363-1031

Village Fire Department: (207) 363-1015 Beach Fire Department: (207) 363-1014

FEES: Each application will incur a $60 fee, plus $30 for each license after the first. All NEW applications will have an additional $50 fee, and all license amendments will have a $25 fee. All fees are to be paid at time of submittal and shall be non-refundable. Cash or Check only; Please make check payable to Town of York.

Back to Agenda

Provide the following information about any relevant State licenses:

STATE LICENSE INFORMATION			TOWN
ID Number(s):	5294		15-008
Expiration Date(s):	12-28-16		MAR 9 2016
Classification(s):	0-29-Seats 15 in		FOOD SERVICE

Please read the following and sign to complete your application:

I understand that a license is required before operating or conducting any business or activity governed by the Town's Business Licensing Ordinance and that ongoing compliance with the provisions of the Town's Business Licensing Ordinance and other applicable Town codes is required throughout the entire license period.

I understand that this Business License Application must be filled out completely, all fees must be paid, and all necessary department inspections must be completed and passed before the license(s) will be considered by the Board of Selectmen.

Business Owner: Scott A Berger *Signature* Have you ever been convicted of a Felony? YES / NO

Business Manager: Scott A Berger *Signature* Have you ever been convicted of a Felony? YES / NO

(If either person has a Felony conviction, please attach an explanation of the circumstances)

FOR OFFICE USE ONLY

FEES	Amount	Map – Lot: 0050 - 0031
Application and First License ($60)	60.—	Processed By: mmavery
Subsequent Licenses ($30 each)	—	Received Date: 2/1/2016
New License Fee ($50)	—	Amount Received: $ 60.00
License Amendment ($25)	—	Check # 2417 or Cash ☐
Other:	—	
TOTAL DUE	$ 60.—	LICENSE #: _____ - _____

Department Approvals		Date of Approval	Special Conditions (Attached if Necessary)
Code Enforcement	__ N/A	2/3/16 K. Newell	YES NO
Fire	__ N/A	2/6/16 D Apgar	YES NO
Police	X N/A		YES NO
Tax Collector	__ N/A	2/4/16 N Szeniawski	YES NO
Board of Selectmen	*Town Manager for the Board of Selectmen*	*Date*	YES NO

Back to Agenda

THE TOWN OF

YORK, MAINE

186 York Street, York, Maine 03909

BUSINESS LICENSE APPLICATION

NOTE: Business Licenses are not transferable to another person, business or location.

Business Name: CLIFF REALTY CORP. DBA/ CAPE NEDDICK COUNTRY CLUB

Street Address: 650 SHORE ROAD, CAPE NEDDICK, ME 03902

Business Owner: _____ Business Manager: PAUL HASELTINE

Mailing Address: _____ Mailing Address: 353 OCEAN AVE

WELLS, ME. 04090

Phone Number: _____ Phone Number: 207.251.9897

E-mail Address: _____ E-mail Address: HEZ@CNCCGOLF.COM

Please indicate who is to be the Primary Contact with the Town: ☑ OWNER or ☑ MANAGER

Is the Business Owner same as the prior year? ☑ YES ☐ NO

Please indicate which Licenses or Local Approvals you seek:

Lodging:

___ Bed and Breakfast License (C/F)
___ Innkeeper License (C/F)
Number of Rooms: ____

Food and Beverage:

✓ Food Service License (C/F)
✓ Liquor License (F/P)
___ Bottle Club License (F/P)
Number of Seats: 75

Entertainment:

✓ Special Amusement License (F/P)
___ Dance Hall License (F/P)
___ Bowling Alley License (F)
___ Coin-Operated Amusement License (P)
___ Bingo, Beano and Games of Chance

Miscellaneous:

___ Transient Seller's License
___ Flea Market License
___ Junkyard, Auto Graveyard/Recycling License
___ Other: _____

C – Code Enforcement Inspection Required F – Fire Department Inspection Required P – Police Department Inspection Required

Code Enforcement: (207) 363-1002 Police Department: (207) 363-1031

Village Fire Department: (207) 363-1015 Beach Fire Department: (207) 363-1014

FEES: Each application will incur a $60 fee, plus $30 for each license after the first. All NEW applications will have an additional $50 fee, and all license amendments will have a $25 fee. All fees are to be paid at time of submittal and shall be non-refundable. Cash or Check only; Please make check payable to Town of York.

Check for $ 120.00

Back to Agenda

Provide the following information about any relevant State licenses:

STATE LICENSE INFORMATION			
ID Number(s):	5722	~~LIQUOR~~ ~~[illegible]~~ (493810)	
Expiration Date(s):	3/28/16	2/16/2017	
Classification(s):	LIQUOR	HEALTH	

Please read the following and sign to complete your application:

I understand that a license is required before operating or conducting any business or activity governed by the Town's Business Licensing Ordinance and that ongoing compliance with the provisions of the Town's Business Licensing Ordinance and other applicable Town codes is required throughout the entire license period.

I understand that this Business License Application must be filled out completely, all fees must be paid, and all necessary department inspections must be completed and passed before the license(s) will be considered by the Board of Selectmen.

Business Owner: _____ Have you ever been convicted of a Felony? YES / NO
Signature

Business Manager: _____ Have you ever been convicted of a Felony? YES / NO
Signature

(If either person has a Felony conviction, please attach an explanation of the circumstances)

FOR OFFICE USE ONLY

FEES	Amount	Map – Lot: 0100 - 0003
Application and First License ($60)	60.—	Processed By: mmaverty
Subsequent Licenses ($30 each)	60.—	Received Date: 1/12/16
New License Fee ($50)		Amount Received: $ 120.00
License Amendment ($25)		Check # 20378 or Cash ☐
Other: _____	—	LICENSE #: _____ - _____
TOTAL DUE	$ 120.—	

Department Approvals		Date of Approval	Special Conditions (Attached if Necessary)
Code Enforcement	__ N/A	1/25/16 KNewell	YES NO
Fire	__ N/A		YES NO
Police	__ N/A	1/25/16 ODavis	YES NO
Tax Collector	__ N/A	1/25/16 MSzeniawski	YES NO

Board of Selectmen _____ _____ **YES NO**
Town Manager for the Board of Selectmen *Date*

Back to Agenda

THE TOWN OF

YORK, MAINE

186 York Street, York, Maine 03909

BUSINESS LICENSE APPLICATION

NOTE: Business Licenses are not transferable to another person, business or location.

Business Name: York Village Hotels, LLC. (Microtel Inn & Suites)

Street Address: 6 Market Pl. Dr. York, Me. 03909

Business Owner: Erik Heyland

Business Manager: Amy Thorne

Mailing Address: 6 Market Pl. Dr. York, Me. 03909

Mailing Address: 6 Market Pl. Dr. York, Me. 03909

Phone Number: 207.451.8288

Phone Number: 207.451.8981

E-mail Address: eheyland@heyland-development.com

E-mail Address: athorne@yorkmicrotel.com

Please indicate who is to be the Primary Contact with the Town: ☒ OWNER or ☐ MANAGER

Is the Business Owner same as the prior year? ☒ YES ☐ NO

Please indicate which Licenses or Local Approvals you seek:

Lodging: Hotel.

___ Bed and Breakfast License (C/F)

✓ Innkeeper License (C/F)

Number of Rooms: 64

Food and Beverage:

___ Food Service License (C/F)

___ Liquor License (F/P)

___ Mobile Club License (F/P)

Number of Seats: ___

Entertainment:

___ Special Amusement License (F/P)

___ Dance Hall License (F/P)

___ Bowling Alley License (F)

___ Coin-Operated Amusement License (P)

___ Bingo, Beano and Games of Chance

Miscellaneous:

___ Transient Seller's License

___ Flea Market License

___ Junkyard, Auto Graveyard/Recycling License

___ Other: _____

C – Code Enforcement Inspection Required F – Fire Department Inspection Required P – Police Department Inspection Required

Code Enforcement: (207) 363-1002

Village Fire Department: (207) 363-1015

Police Department: (207) 363-1031

Beach Fire Department: (207) 363-1014

FEES: Each application will incur a $60 fee, plus $30 for each license after the first. All NEW applications will have an additional $50 fee, and all license amendments will have a $25 fee. All fees are to be paid at time of submittal and shall be non-refundable. Cash or Check only; Please make check payable to Town of York.

Back to Agenda

Provide the following information about any relevant State licenses:

STATE LICENSE INFORMATION			
ID Number(s):			
Expiration Date(s):			
Classification(s):			

Please read the following and sign to complete your application:

I understand that a license is required before operating or conducting any business or activity governed by the Town's Business Licensing Ordinance and that ongoing compliance with the provisions of the Town's Business Licensing Ordinance and other applicable Town codes is required throughout the entire license period.

I understand that this Business License Application must be filled out completely, all fees must be paid, and all necessary department inspections must be completed and passed before the license(s) will be considered by the Board of Selectmen.

Business Owner: _____ Have you ever been convicted of a Felony? YES / NO
Signature

Business Manager: _____ Have you ever been convicted of a Felony? YES / NO
Signature

(If either person has a Felony conviction, please attach an explanation of the circumstances)

FOR OFFICE USE ONLY

FEES	Amount	Map – Lot: 0053 - 0009 - 0004
Application and First License ($60)		Processed By: Amaveny
Subsequent Licenses ($30 each)		Received Date: 11/18/2015
New License Fee ($50)		Amount Received: $ 90.00
License Amendment ($25)		Check #: 4257 or Cash ☐
Other:	—	LICENSE #: _____ - _____
TOTAL DUE	$ 90.—	

Department Approvals		Date of Approval	Special Conditions (Attached if Necessary)
Code Enforcement	__ N/A	12/4/15 K Newell	YES NO
Fire	__ N/A	2/9/16 D Apgar	YES NO
Police	X N/A		YES NO
Tax Collector	__ N/A	11/20/15 M Szeniawski	YES NO
Board of Selectmen	_____ *Town Manager for the Board of Selectmen*	_____ *Date*	YES NO

Back to Agenda

REQUEST FOR ACTION BY BOARD OF SELECTMEN

DATE SUBMITTED: February 24, 2016	☒ ACTION
DATE ACTION REQUESTED: August 29, 2015	☐ DISCUSSION ONLY
SUBJECT: RFP for New Design of York Beach Access Road	

DISCUSSION OF OPTIONS AVAILABLE TO THE BOARD:

A summary of the relevant history for this project is as follows:

- On November 16, 2015 The Board of Selectmen awarded the conceptual planning and layout of a new alignment for the connector road between Ridge Road and US Route 1 to Ransom Consulting, Inc. at no cost to the Town.
- On December 12, 2015 The Board of Selectmen held a site walk at The York Wild Kingdom entrance.
- On December 21, 2015 Steve Bradstreet & Dean Lessard met with Town Planner to discuss the three proposed alignments and there impacts to future development of the property.
- On January 21, 2016 Steve Bradstreet & Dean Lessard met with Joe Barberi to discuss the three proposed alignments.
- On January 25, 2016 The Board of Selectmen approved Ransom Engineers to finalize the conceptual design of preferred alignment option #2 and prepare an opinion of probable costs for this proposed alignment.
- On February 11, 2016 Steve Bradstreet & Dean Lessard met with Joe Barberi to discuss the preferred alignment option #2, access to parking and the York Wild Kingdom entrance off the new access road.
- On February 23, 2016 Steve Bradstreet & Dean Lessard met with David Cherry of the Maine DEP for a pre-application meeting to discuss the site development environmental permitting for the proposed designs.
- On February 29, 2016 Steve Bradstreet & Dean Lessard met with the Town Planner, Code Enforcement Officer and the superintendents of the Water and Sewer Districts to discuss the preferred alignments and there impacts to future development of the property.

Back to Agenda

RECOMMENDATION: There are two initial recommended actions:

1. Accept alignment #2 as the preferred option.
2. Have the BOS Subcommittee (Robert and Jon) to meet with Joe Barberi to negotiate this option and report back to the Board.

Only after property issues have been resolved, direct staff to draft an RFP to solicit proposals from interested Engineering firms for the planning, surveying, preliminary design engineering including signalized intersection design, environmental permitting, construction bid documents and project management services for a York Beach access road from Ridge Road to US Route 1 utilizing a portion of the previously designed access road and a portion of the existing Wild Kingdom Road and its US Route 1 entrance.

PROPOSED MOTION: I move to accept Alignment #2 as the preferred option, and to have the Board's subcommittee for negotiations with York's Wild Kingdom meet with Joe Barberi to negotiate for this option and report back to the Board.

FISCAL IMPACT: None by this action, but I note that the cost estimates provided by Ransom Engineering are well within the approximately $2.4M remaining in the two bonds for this property.

DEPARTMENT LINE ITEM ACCOUNT:

BALANCE IN LINE ITEM IF APPROVED:

PREPARED BY: _____Dean Lessard_____ REVIEWED BY: _____

Back to Agenda

RANSOM
Consulting, Inc.

Consulting
Engineers
and Scientists

February 24, 2016

Project 151.06167

Mr. Stephen Burns
Town Manager
186 York Street
York, Maine 03909

RE: US Route 1/Ridge Road Connector Conceptual Design
York, Maine

Dear Mr. Burns:

Ransom Consulting, Inc. (Ransom) has appreciated the opportunity to prepare an evaluation of conceptual alignments for the connector road between US Route 1 and Ridge Road. This evaluation has been made possible with the availability of previously submitted plans by SMRT, plans created by Brett Horr with the Town, a previous cost estimate by CLD Engineers, discussions with the Maine Department of Environmental Protection, Town staff and the Selectmen. Through the process we have had a site meeting with the Selectmen and other concerned citizens, two separate site meetings with Joe Barberi and multiple meetings with Dean Lessard.

HORIZONTAL ALIGNMENT

Ransom created multiple versions of possible alternative connections from the original connector road alignment, through Wild Kingdom (WK) property and ultimately connecting to US Route 1 adjacent to the WK entrance. Alternative alignments considered wetlands, vernal pools, ledge outcrops, topography, shortest routes, re-use of the existing WK access road, displaced WK parking, maintaining private access for the WK from the proposed public road and confirming that the remaining land of WK was not adversely impacted for future development.

Ransom prepared three conceptual alternative alignments. Alignments 1 and 2 both came off the original connector road alignment at the same location. This location was specifically selected to miss a large wetland and to be as close to the WK property as reasonable possible considering the other factors noted above. These alignments also crossed the WK road at a stream culvert location so that the culvert could be considered for replacement and that the permitting for culvert replacement could be minimized. Alignment 1 swung north through the WK storage and gravel parking area and aligned with the driveway across Route 1, providing excellent sight distance and retaining the WK sign and goat pen. Alignment 2 followed the WK access drive after crossing the stream and then swung northerly to come out at the same location as Alignment 1. This slight modification was prepared to save some road costs but due to the road's vertical alignment, it did not. Both alignments not only would require maintaining access from the newly created road onto the WK access road for staff and deliveries but also maintain private access for the WK to pick up patrons, with their "people mover" trolley, that would be parking in the existing parking areas. This involved two design aspects. The first was to upgrade and existing woods road for the

400 Commercial Street, Suite 404, Portland, Maine 04101, Tel (207) 772-2891, Fax (207) 772-3248
Pease International Tradeport, 112 Corporate Drive, Portsmouth, New Hampshire 03801, Tel (603) 436-1490
12 Kent Way, Suite 100, Byfield, Massachusetts 01922, Tel (978) 465-1822
2127 Hamilton Avenue, Hamilton, New Jersey 08619, Tel (609) 584-0090
60 Valley Street, Building F, Suite 106, Providence, Rhode Island 02909, Tel (401) 433-2160

www.ransomenv.com

Back to Agenda

trolley to move from the WK access road directly to the gravel parking areas without being on the public road. The second was to connect the two parking areas on opposite sides of the road without an "at grade" crossing. In order to do this, it was determined that passage from one side of the public road to the other would be required. Due to the private access restrictions for unregistered vehicles (WK trolley, maintenance vehicles, etc) it was determined that an "underpass" would be required to allow the trolley and/or pedestrians from vehicles to cross the public road. Alignment 2 was selected by Joe Barberi as the most acceptable alignment for his current and potential future uses, barring any other discussions with the Town regarding land ownership transfers. Alignment 3 was the original alignment proposed and approved by the Town and environmental agencies.

VERTICAL ALIGNMENT

Once the horizontal alignment of the first two alignments were considered to be acceptable, Ransom created an existing profile based on the topography from previously provided plans by SMRT and the Town. With these alignments Ransom prepared proposed road profile considering the ledge outcrops and the requirement for the underpass. The alignments met the Town's road standards and also provided a much improved intersection with Route 1, increasing visibility in both directions by raising the entering public road grade considerably. The alignment of the original connector road was maintained with no changes.

TOWN ROAD DEVELOPMENT STANDARDS

Ransom has met with Town staff regarding Town road and development standards and has reviewed the Town's ordinances regarding the potential of development by the WK off the proposed public road. Alignment 1 does not provide adequate useable area or a reasonable lot depth for future development on the north, though the remaining property on the south side does have development potential. Alignment 2 more evenly splits the WK land into developable parcels on both sides of the public road. Development review was based on existing wetlands, vernal pool and topography data. Future design of the road and lot development may change the road alignments and parcel configuration to meet development and road standards while considering field acquired data.

ENVIRONMENTAL AGENCIES PERMITTING

Steve Bradstreet and Dean Lessard met with David Cherry from the Maine Department of Environmental Protection on Tuesday, February 23rd to discuss potential permitting requirements for the new road alignments. Initially Mr Cherry felt that it would be a minor modification of the existing permits with the stream crossing being either added to the modified permit of a standalone Permit by Rule for Stream crossings, though once the road right of way was purchased the culvert replacement could be considered for a public works replacement exemption.

Later that day, Mr. Cherry emailed Steve and Dean and indicated that since the original alignments were not within the original permit the Site Location of Development Permit that was obtained for the original project would require a major modification.

Back to Agenda

Mr. Stephen Burns
Town Manager

COSTS COMPARISONS

The cost estimates prepared for Alignments 1 and 2 were based on a cost estimate for Alignment 3 prepared by CLD Engineers in January of 2015. Ransom was able to utilize existing quantities and costs from that estimate for the length of common road and then apply the quantities from the new alignments to determine total costs for the new alignments. The following provides a brief synopsis of each Alignment's costs. The costs estimates, because of their conceptual level, include a 10% contingency.

Alternative 1 (Blue Alignment)

- Total of 4,401 feet of road
  - 2,932 feet common to other alignments
  - 1,469 feet of new road alignment
  - Approximate road structure cost-$1,274,800

Alternative 2 (Red Alignment)

- Total of 4,362 feet of road
  - 2,932 feet common to other alignments
  - 1,430 feet of new road alignment
  - Approximate road structure cost-$1,278,800

Alternative 3 (Black Alignment-original design)

- Total of 4,705 feet of road
  - 2,932 feet common to other alignments
  - 1,773 feet of new road alignment
  - Approximate road structure cost-$1,235,400

We trust that this evaluation assists the Town in moving forward with this project. It has been a pleasure working with the Town staff and obtaining direction from both you and the Selectmen.

Sincerely,

RANSOM CONSULTING, INC.

Stephen J. Bradstreet, P.E.
Principal/Senior Project Manager

Back to Agenda

RANSOM Consulting Engineers and Scientists

Connector Road - Alternative 1

Date: February 22, 2016

By: Steve Bradstreet, Checked by: Maureen McGlone

Item	Description	Unit	Unit Cost	Quantity	Cost
203.20	COMMON EXCAVATION	CY	$8.00	10,882	$87,056.00
203.21	ROCK EXCAVATION	CY	$50.00	650	$32,500.00
203.24	EMBANKMENT	CY	$8.00	9,836	$78,688.00
304.09	STONE DUST SIDEWALK	SY	$20.00	3,382	$67,640.00
304.10	GRAVEL SUBBASE, TYPE D	CY	$11.00	14,662	$161,282.00
304.11	CRUSHED STONE	CY	$25.00	452	$11,300.00
304.14	CRUSHED AGGREGATE BASE, TYPE A	CY	$30.00	2,585	$77,550.00
403.208	HOT MIX ASPHALT - ROADWAY	T	$69.00	3,174	$219,006.00
403.209	HOT MIX ASPHALT - SIDEWALK	T	$69.00	103	$7,107.00
502.21	RETAINING WALLS (reuse granite blocks)	SF	$20.00	4,417	$88,340.00
603.16	15" CULVERT PIPE - HDPE	LF	$25.00	499	$12,475.00
603.17	4' X 4' EMBEDDED BOX CULVERT	LF	$250.00		$0.00
603.19	5' X 4' EMBEDDED BOX CULVERT	LF	$250.00	60	$15,000.00
603.20	TWO 3' X 2' EMBEDDED BOX CULVERTS	LF	$375.00	52	$19,500.00
604.092	CATCH BASIN TYPE F	EA	$1,000.00	6	$6,000.00
605.094	4' UNDERDRAIN	LF	$10.00	110	$1,100.00
605.96	6' UNDERDRAIN	LF	$13.00	2,786	$36,218.00
605.0912	12' UNDERDRAIN	LF	$20.00	160	$3,200.00
606.15	GUARDRAIL TYPE 3A - SINGLE RAIL	LF	$20.00	-	$0.00
606.265	TERMINAL END - SINGLE RAIL GALVANIZED STEEL	EA	$1,000.00	6	$6,000.00
607.16	42" BLACK VINYL CHAIN LINK RAILING	LF	$30.00	-	$0.00
609.11	CONCRETE CURB	LF	$8.00	239	$1,912.00
610.18	STONE DITCH PROTECTION	CY	$30.00	1,069	$32,070.00
613.319	EROSION CONTROL BLANKET	SY	$3.00	2,411	$7,233.00
615.07	LOAM	CY	$30.00	1,198	$35,940.00
618.1301	SEEDING METHOD NUMBER 1, PLAN QUANTITY	UN	$40.00	97	$3,880.00
619.1201	MULCH, PLAN QUANTITY	SY	$0.40	10,782	$4,312.80
620.58	EROSION CONTROL GEOTEXTILE	SY	$2.00	3,198	$6,396.00
627.18	12" SOLID WHITE PAVEMENT MARKING LINE	LF	$0.40	70	$28.00
627.733	4' WHITE OR YELLOW PAINTED PAVEMENT MARKING	LF	$0.20	19,771	$3,954.20
627.75	WHITE OR YELLOW PAVEMENT & CURB MARKING	SF	$2.00	695	$1,390.00
656.75	TEMPORARY SOIL EROSION AND WATER POLLUTION	LS	$25,000.00	1	$25,000.00
	10'x10' box for vehicle passage	LF	$2,000.00	60	$120,000.00
B-100	BIORETENTION POND B-100	LS	$18,000.00	1	$18,000.00
B-101	BIORETENTION POND B-101	LS	$18,000.00	1	$18,000.00
	Clearing and Grubbing	Acre	$3,000.00	2	$6,000.00
	5% mobilization	1	LS	1	$60,703.90
			Project Total:		$1,274,781.90
			Grand Total:		**$1,274,781.90**

Back to Agenda

RANSOM Consulting Engineers and Scientists

Connector Road - Alternative 1

Date: February 22, 2016

By: Steve Bradstreet, Checked by: Maureen McGlone

Item	Description	Unit	Unit Cost	Quantity	Cost
203.20	COMMON EXCAVATION	CY	$8.00	10,882	$87,056.00
203.21	ROCK EXCAVATION	CY	$50.00	650	$32,500.00
203.24	EMBANKMENT	CY	$8.00	9,836	$78,688.00
304.09	STONE DUST SIDEWALK	SY	$20.00	3,382	$67,640.00
304.10	GRAVEL SUBBASE, TYPE D	CY	$11.00	14,662	$161,282.00
304.11	CRUSHED STONE	CY	$25.00	452	$11,300.00
304.14	CRUSHED AGGREGATE BASE, TYPE A	CY	$30.00	2,585	$77,550.00
403.208	HOT MIX ASPHALT - ROADWAY	T	$69.00	3,174	$219,006.00
403.209	HOT MIX ASPHALT - SIDEWALK	T	$69.00	103	$7,107.00
502.21	RETAINING WALLS (reuse granite blocks)	SF	$20.00	4,417	$88,340.00
603.16	15" CULVERT PIPE - HDPE	LF	$25.00	499	$12,475.00
603.17	4' X 4' EMBEDDED BOX CULVERT	LF	$250.00		$0.00
603.19	5' X 4' EMBEDDED BOX CULVERT	LF	$250.00	60	$15,000.00
603.20	TWO 3' X 2' EMBEDDED BOX CULVERTS	LF	$375.00	52	$19,500.00
604.092	CATCH BASIN TYPE F	EA	$1,000.00	6	$6,000.00
605.094	4' UNDERDRAIN	LF	$10.00	110	$1,100.00
605.96	6' UNDERDRAIN	LF	$13.00	2,786	$36,218.00
605.0912	12' UNDERDRAIN	LF	$20.00	160	$3,200.00
606.15	GUARDRAIL TYPE 3A - SINGLE RAIL	LF	$20.00	-	$0.00
606.265	TERMINAL END - SINGLE RAIL GALVANIZED STEEL	EA	$1,000.00	6	$6,000.00
607.16	42" BLACK VINYL CHAIN LINK RAILING	LF	$30.00	-	$0.00
609.11	CONCRETE CURB	LF	$8.00	239	$1,912.00
610.18	STONE DITCH PROTECTION	CY	$30.00	1,069	$32,070.00
613.319	EROSION CONTROL BLANKET	SY	$3.00	2,411	$7,233.00
615.07	LOAM	CY	$30.00	1,198	$35,940.00
618.1301	SEEDING METHOD NUMBER 1, PLAN QUANTITY	UN	$40.00	97	$3,880.00
619.1201	MULCH, PLAN QUANTITY	SY	$0.40	10,782	$4,312.80
620.58	EROSION CONTROL GEOTEXTILE	SY	$2.00	3,198	$6,396.00
627.18	12" SOLID WHITE PAVEMENT MARKING LINE	LF	$0.40	70	$28.00
627.733	4' WHITE OR YELLOW PAINTED PAVEMENT MARKING	LF	$0.20	19,771	$3,954.20
627.75	WHITE OR YELLOW PAVEMENT & CURB MARKING	SF	$2.00	695	$1,390.00
656.75	TEMPORARY SOIL EROSION AND WATER POLLUTION	LS	$25,000.00	1	$25,000.00
	10'x10' box for vehicle passage	LF	$2,000.00	60	$120,000.00
B-100	BIORETENTION POND B-100	LS	$18,000.00	1	$18,000.00
B-101	BIORETENTION POND B-101	LS	$18,000.00	1	$18,000.00
	Clearing and Grubbing	Acre	$3,000.00	2	$6,000.00
	5% mobilization	1	LS	1	$60,703.90
			Project Total:		$1,274,781.90
			Grand Total:		**$1,274,781.90**

Back to Agenda

NORTH

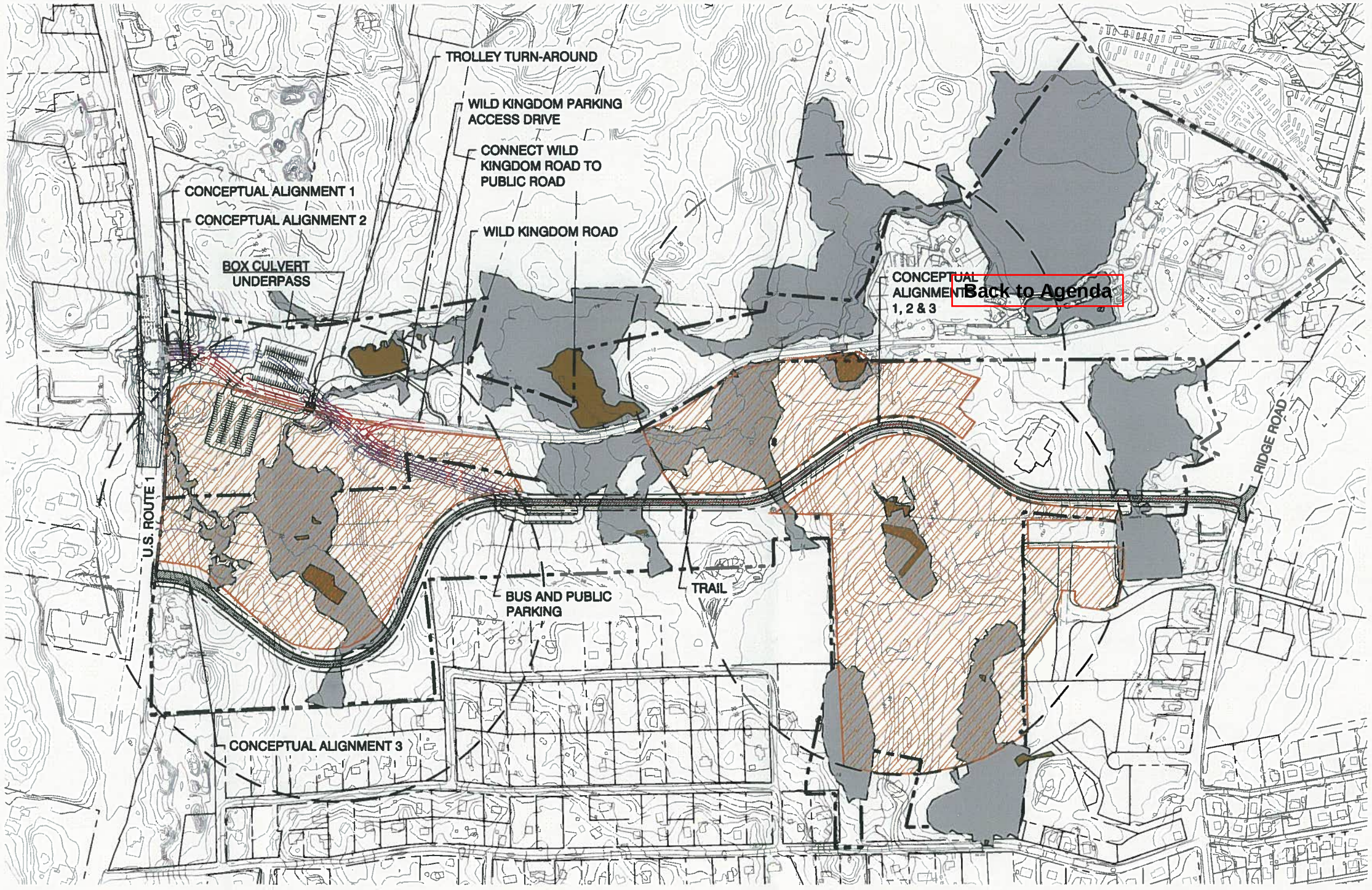

Back to Agenda

CONCEPTUAL ACCESS ROAD LAYOUTS
SCALE: 1" = 200'

SCALE

0 100 200 400

SCALE in FEET
1"=200'

KEY

- CONCEPTUAL ALIGNMENT 1
- CONCEPTUAL ALIGNMENT 2
- CONCEPTUAL ALIGNMENT 3
- WETLANDS
- VERNAL POOLS
- CONTIGUOUS POST-DEVELOPMENT FORESTED HABITAT
- 750' VERNAL POOL BUFFER

Site:

ROUTE ONE / RIDGE ROAD CONNECTOR
YORK, MAINE

Prepared for:

TOWN OF YORK
YORK, MAINE

STATE OF MAINE
STEPHEN J. BRADSTREET #5740 LICENSED
PROFESSIONAL ENGINEER

CIVIL ENGINEER:
STEPHEN J. BRADSTREET, PE #5740
400 COMMERCIAL STREET, SUITE 404
PORTLAND, ME 04101
207-772-2891

RANSOM
Consulting Engineers and Scientists
400 Commercial Street, Suite 404
Portland, ME 04101
Tel. (207) 772-2891
Fax (207) 772-3248
www.ransomenv.com

CONCEPTUAL LAYOUTS

No.	Revision/Issue	Date
A	PRELIMINARY REVIEW	01/11/16

Design by: SJB	Checked by: SJB
Drawn by: JAR	Approved by: SJB
Project: 151.06167	Date: JANUARY 2016

Sheet No: C-100

Sheet 1 of 1

REQUEST FOR ACTION BY BOARD OF SELECTMEN

DATE SUBMITTED: February 11, 2016	☒ ACTION
DATE ACTION REQUESTED: February 29, 2016	☐ DISCUSSION ONLY
SUBJECT: Ordinance Amendment-York Village Affordable Elderly Housing Overlay District Expansion	

DISCUSSION OF OPTIONS AVAILABLE TO THE BOARD: Conduct a public hearing on the proposed ordinance amendment. If no further changes are made to the proposed amendment the place it on the May 21, 2016 Special General Referendum ballot. If substantive changes are made then post if for a public hearing on March 28, 2016.

RECOMMENDATION: Hold Public Hearing on proposed ordinance amendment, if no further substantive changes are made to the proposed amendment, approve the amendment as posted to be placed on the May 21, 2016 Special General Referendum Ballot.

PROPOSED MOTION: I move to place the proposed York Village Affordable Elderly Housing Overlay District Expansion on the May 21, 2016 Special General Referendum ballot.

FISCAL IMPACT: N/A

DEPARTMENT LINE ITEM ACCOUNT: N/A

BALANCE IN LINE ITEM IF APPROVED: N/A

PREPARED BY: Dylan L. Smith, Planning Director REVIEWED BY: _____

Back to Agenda

Amendment #2

York Village Affordable Elderly Housing Overlay District

Ballot Language: The following language would appear on the ballot:

Article X
The Town hereby ordains amendment of the **Zoning Ordinance** to amend the York Village Affordable Elderly Housing Overlay District map.

Statement of Fact: The purpose of this amendment is to expand the York Village Affordable Elderly Housing Overlay District to include a parcel that directly abuts the current district.

Amendment:
Amend section 3.14 York Village Affordable Housing Overlay District by changing the reference date and expanding the overlay district map (see attachment) as follows:

3.14 York Village Affordable Elderly Housing Overlay District

The York Village Affordable Elderly Housing Overlay District shall include the property as shown on a map entitled, "York Zoning Ordinance: York Village Affordable Elderly Housing Overlay District" dated ~~March 5, 2003~~ *December 8, 2015.*

Recommended by the Planning Board:
Recommended by the Board of Selectmen:

Back to Agenda

York Zoning Ordinance: York Village Affordable Elderly Housing Overlay District

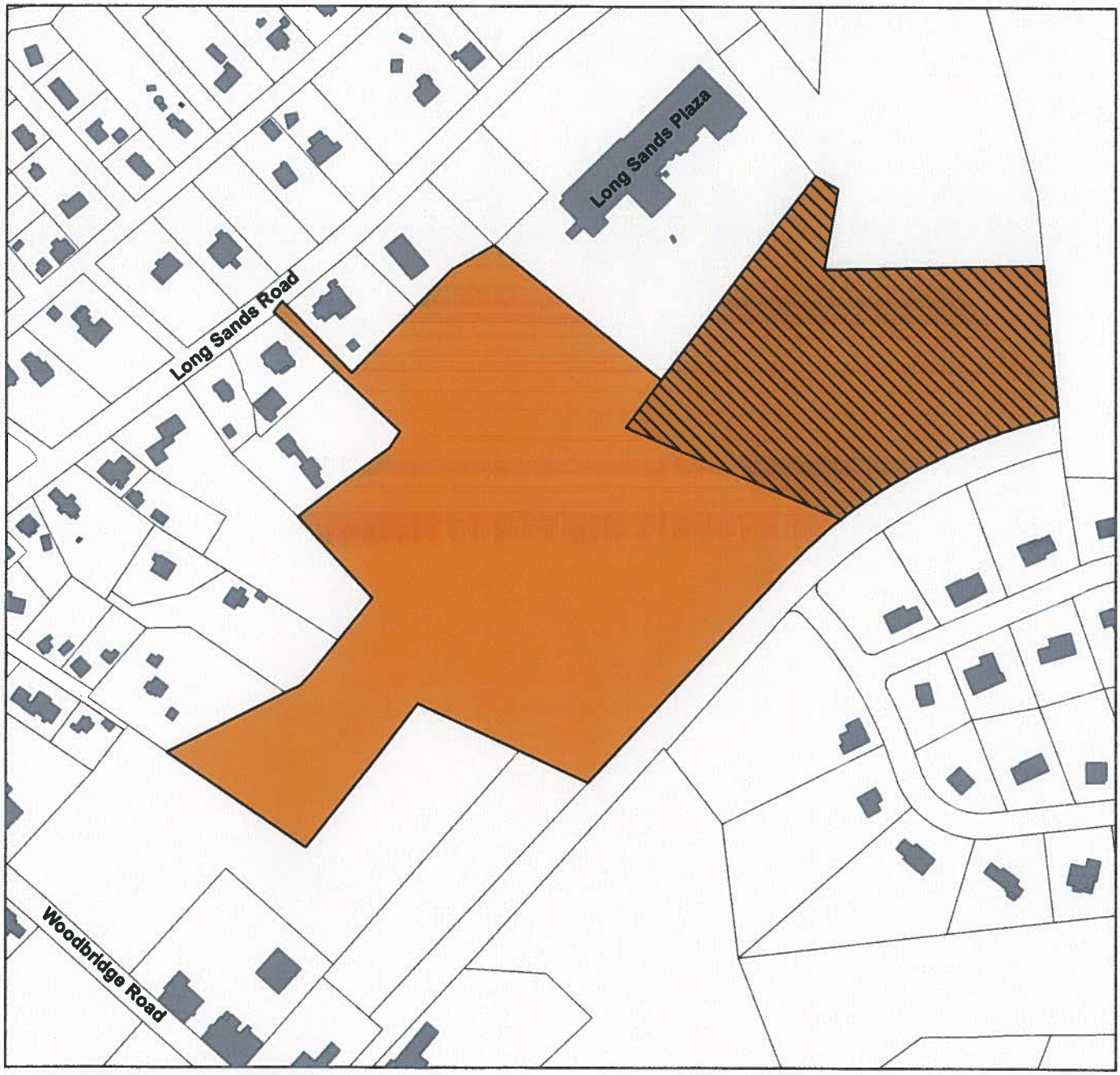

Locus

Buildings

Parcels

York Village Affordable Elderly Housing Overly District

Proposed Expansion of the York Village Affordable Elderly Housing Overlay District

York, Maine
DRAFT: December 8, 2015

Back to Agenda

REQUEST FOR ACTION BY BOARD OF SELECTMEN

DATE SUBMITTED: February 11, 2016	☒ ACTION
DATE ACTION REQUESTED: February 29, 2016	☐ DISCUSSION ONLY
SUBJECT: Zoning Ordinance Amendment- York Village Center Zoning Districts	

DISCUSSION OF OPTIONS AVAILABLE TO THE BOARD: Conduct a public hearing on the proposed zoning ordinance amendment. Discuss additional amendments to the language as proposed. In anticipation of a known comment/concern from York Hospital (as specified in the attached email), consider adding language to Section "10-B.2 Design Standards" of the York Hospital Overlay District as presented by the Planning Director.

RECOMMENDATION: Consider amending the proposed ordinance amendment with the prescribed language as presented by the Planning Director. Move to hold a second public hearing on the proposed ordinance amendment at the March 28, 2016 Board of Selectmen meeting.

PROPOSED MOTION: I move to hold a second public hearing on the proposed York Village Center Districts ordinance, as amended, at the March 28, 2016 Board of Selectmen regularly scheduled meeting.

FISCAL IMPACT: N/A

DEPARTMENT LINE ITEM ACCOUNT: N/A

BALANCE IN LINE ITEM IF APPROVED: N/A

PREPARED BY: Dylan L. Smith, Planning Director REVIEWED BY: _____

Back to Agenda

MEMO

To: Board of Selectmen

From: Dylan Smith, York Planning Director

Date: February 11, 2016

RE: Proposed amended language to the York Village Hospital Overlay District as part of the York Village Center Zoning Districts amendment

After considering the concerns brought forth by York Hospital (see attached email from Steve Pelletier) I have drafted the following highlighted language for the Board to consider adding to the York Village Center Zoning Districts amendment. I think the added language will grant flexibility in architectural design and building materials used for future development within the hospital overlay district. However, I think it will also ensure a reasonable level of municipal review of building design. The proposed added language is as follows:

Amendment: In Article 10-B, York Village Hospital Overlay District, add the following provisions to 10-B.2 Design Standards regarding building footprint limitations and building appearance:

> G. *Building Footprint. Maximum Building Footprint requirements shall not apply within this overlay district.*
>
> H. *Building Appearance. The Planning Board may consider alternative approaches to building design and materials in this overlay district but shall ensure structures are related harmoniously to the terrain and to existing buildings in the vicinity that have a visual relationship to the proposed buildings.*

Thank you very much for your consideration.

Sincerely,

Dylan Smith
Planning Director

Back to Agenda

Dylan Smith

From: Stephen Pelletier <SPelletier@yorkhospital.com>
Sent: Thursday, February 11, 2016 10:07 AM
To: Dylan Smith
Cc: Stephen H. Burns; Jud Knox
Subject: RE: Proposed York Village Center Zoning Districts and The York Village Hospital Overlay District

Importance: High

Dylan,
As an additional thought. Health Care Designs, for most interior and some exterior, are governed by **Federal standards, very specific AIA Architectural Health Care standards, and ADA standards.**
Thanks Steve

From: Dylan Smith [mailto:dsmith@yorkmaine.org]
Sent: Thursday, February 11, 2016 9:06 AM
To: Stephen Pelletier
Cc: Stephen H. Burns; Jud Knox
Subject: RE: Proposed York Village Center Zoning Districts and The York Village Hospital Overlay District

Hi Steve-

Thank you for your input. I will make note of this at the BOS hearing on the 29th of February as you might want to attend this meeting as well to share your thoughts and or concerns. The language is similar to the existing language of "6.1.12 Relation of Proposed Building to Environment" but is a little bit more prescriptive. Currently, there is not any discussion or section with regards to "building appearance" in section 10-B.2 of the Hospital Overlay District and perhaps, with your concerns known, something can be added in that section to clarify that the Planning Board can consider alternative approaches to building design and materials.

Best,
Dylan

Dylan L. Smith
Planning Director
Town of York
186 York Street
York, Maine 03909
(207) 363-1007

From: Stephen Pelletier [mailto:SPelletier@yorkhospital.com]
Sent: Wednesday, February 10, 2016 5:32 PM
To: Dylan Smith <dsmith@yorkmaine.org>
Cc: Stephen H. Burns <sburns@yorkmaine.org>; Jud Knox <JKnox@yorkhospital.com>
Subject: YH: Proposed York Village Center Zoning Districts and The York Village Hospital Overlay District
Importance: High

Dylan,

Back to Agenda

In reviewing the proposed 6.1.12.1 YVC-1 Non Residential Performance Standards: ....." All new buildings and major renovations will complement the best village and architectural characteristic in terms of scale, proportion, building height, window size, roof pitch and exterior building materials" I am concerned that the proposed standard is in conflict with the design standards in the voter approved York Village Hospital Overlay District.

The York Village Hospital Overlay District states : "A hospital is an important community institution, with unique needs regarding its site development. The purpose of this section is to offer certain flexibility so that the hospital cab expand, but require good performance standards."

I just want to make sure that the proposed York Village Center Zoning Standards don't adversely affect York Hospital as we change to meet the needs of the community.

Thanks Steve

IMPORTANT CONFIDENTIALITY NOTICE:

THIS COMMUNICATION AND ANY ACCOMPANYING ATTACHMENTS MAY CONTAIN CONFIDENTIAL AND PRIVILEGED PROTECTED HEALTH INFORMATION OR OTHER CONFIDENTIAL OR PROPRIETARY INFORMATION. IT IS INTENDED SOLELY FOR THE USE OF THE INTENDED RECIPIENT IDENTIFIED IN THIS EMAIL. IF YOU ARE NOT THE INTENDED RECIPIENT, ANY USE, DISTRIBUTION, DISCLOSURE, PRINTING OR COPYING OF THIS COMMUNICATION OR ATTACHMENTS IS STRICTLY PROHIBITED. IF YOU ARE NOT THE INTENDED RECIPIENT OR THIS EMAIL HAS BEEN RECEIVED BY YOU IN ERROR, PLEASE IMMEDIATELY NOTIFY THE SENDER AND DESTROY ALL COPIES OF THE ORIGINAL MESSAGE AND ANY ATTACHMENTS.

CONFIDENTIALITY: The information contained in this electronic mail message and any electronic files attached to it may be confidential information, and may also be the subject of legal professional privilege and/or public interest immunity. If you are not the intended recipient you are required to delete it. Any use, disclosure or copying of this message and any attachments is unauthorized. If you have received this electronic message in error, please inform the sender or contact town@yorkmaine.org. This footnote also confirms that this email message has been checked for the presence of computer viruses.

Back to Agenda

Amendment #1

York Village Center Zoning District

Ballot Language: The following language would appear on the ballot:

Article X
The Town hereby ordains amendment of the **Zoning Ordinance** to establish new Zoning Districts called the York Village Center-1 and York Village Center-2 (YVC-1 & YVC-2) Zoning Districts.

Statement of Fact: The purpose of this amendment is to implement recommendations found within Volume 1 of the Comprehensive Plan as referenced and articulated under Future Land Use area #8 regarding revising current zoning to establish specific York Village Center (YVC) zoning standards and as discussed in the recently adopted York Village Master Plan. The establishment of these village districts includes identifying district boundaries and creating village appropriate dimensional requirements, density allowances, permitted and prohibited uses, parking standards and including development performance standards as appropriate within the defined zones. The following sections of the zoning ordinance as it relates to the establishment of the York Village Center zoning districts have been included or amended.

Recommendations:
Recommended by the Planning Board:
Recommended by the Board of Selectmen:

Amendment: Add a new section to 1.3.13-Concerning Village Zones with the following:

1.3.13 Concerning Village Zones

The Comprehensive Plan recognizes the unique conditions in four village centers in Town, including York Village, York Harbor, York Beach, and Cape Neddick. Within each of these areas, standards relating to use, dimensions, density and design should be treated differently than in other areas of the community.

A. Goal for the York Beach Village Area. Promote an attractive, inviting, safe, pedestrian-focused, family-oriented environment; safeguard the historic flavor, character and diversity; safeguard clean healthy beaches; and help support coordinated improvements to businesses, residences and public places through a predictable and timely process.

B. Goal for the York Village Center Districts. Promote an attractive, inviting, safe, pedestrian-focused, family-oriented, four season environment; safeguard the historic architecture, character and diversity; and help support coordinated improvements to businesses, residences and public places through a predictable and timely process.

Back to Agenda

Amendment: Add a new definition of Building Footprint to Article 2-Definitions with the following:

> *Building Footprint: The exterior outline of a building where it meets the ground surface, measured on a horizontal plane.*

Amendment: Add York Village Center-1(YVC-1) and York Village Center-2 (YVC-2) districts to section 3.4-Map of Base Zoning Districts as follows:

3.4 Map of Base Zoning Districts

A Base Zoning Districts

The boundaries of base zoning districts established pursuant to this Ordinance are delineated in detail on a map entitled, "York Zoning Ordinance: Base Zoning Districts" dated ~~April 27, 2015~~ *February 4, 2016.*

The following base zones are delineated:

RES-1	Residential 1
RES-2	Residential 2
RES-3	Residential 3
RES-4	Residential 4
RES-5	Residential 5
RES-6	Residential 6
RES-7	Residential 7
BUS-1	Business 1
BUS-2	Business 2
YBVC	York Beach Village Center
YVC-1	*York Village Center-1*
YVC-2	*York Village Center-2*
RT 1-1	Route One-1, River
RT 1-2	Route One-2, Small Makes Sense
RT 1-3	Route One-3, Big Makes Sense
RT 1-4	Route One-4, Tourism/Recreation
RT 1-5	Route One-5, Cape Neddick Village
RT 1-6	Route One-6, Rural Mixed Use
GEN-1	General Development 1
GEN-2	General Development 2
GEN-3	General Development 3

Back to Agenda

Amendment: In Article 4, Use Regulations, add a new section to 4.1.2-Business, Village and General Districts with the following permitted use section:

Permitted Uses in YVC-1 and YVC-2

Residential Use Category (YVC-1 & YVC-2)

- *Single-Family Dwelling (Permitted throughout either district except on lots with frontage on York Street, Woodbridge Road or Long Sands Road. The use shall only be permitted within a mixed-use building except that the use may also occupy no more than 50% of the first floor gross floor area)*
- *Two-Family Dwelling (Permitted throughout district except on lots with frontage on York Street, Woodbridge Road or Long Sands Road. The use shall only be permitted within a mixed-use building except that the use may also occupy no more than 50% of the first floor gross floor area)*
- *Multi-Family Dwelling – Only on lots served by public sewer and public water. (Permitted throughout district except on lots with frontage on York Street, Woodbridge Road or Long Sands Road. The use shall only be permitted within a mixed-use building except that the use may also occupy no more than 50% of the first floor gross floor area)*
- *Boarding House Only on lots served by public sewer and public water. (Permitted throughout district except on lots with frontage on York Street, Woodbridge Road or Long Sands Road. The use shall only be permitted within a mixed-use building except that the use may also occupy no more than 50% of the first floor gross floor area)*
- *Bed & Breakfast Only on lots served by public sewer and public water.*
- *Elderly Housing Only on lots served by public sewer and public water. (Permitted throughout district except on lots with frontage on York Street, Woodbridge Road or Long Sands Road. The use shall only be permitted within a mixed-use building except that the use may also occupy no more than 50% of the first floor gross floor area)*
- *Elderly Congregate Housing Only on lots served by public sewer and public water. (Permitted throughout district except on lots with frontage on York Street, Woodbridge Road or Long Sands Road. The use shall only be permitted within a mixed-use building except that the use may also occupy no more than 50% of the first floor gross floor area)*

Back to Agenda

Commercial Use Category (YVC-1 & YVC-2)

- *Service Business Serving Local Needs such as, but not limited to, barber shop/hair salon/spa, shoe repair, Laundromat, dry-cleaning pick-up agency, tailoring, printing shop, caterer or other similar use (Individual establishment not to exceed 2,500 square feet of gross floor area)*
- *Store for Retail Sale of Merchandise provided all display, storage and sale of materials are conducted within a building. Store may also produce goods onsite, provided such are sold on site and the production area is smaller than the retail area. (Individual establishment not to exceed 3,500 square feet of gross floor area).*
- *Bank (without drive-through window, not to exceed 2,500 square feet of gross floor area).*
- *Lodging and Tourist Home/Inn*
- *Restaurant (Individual establishment not to exceed 3,500 square feet of gross floor area)*
- *Artisanal Food and/or Beverage Facility (Individual establishment not to exceed 5,000 square feet of gross floor area; retail sales of merchandise as part of this use shall not supersede 2,500 square feet of gross floor area)*
- *Ice Cream Stand (Individual establishment not to exceed 2,500 square feet of gross floor area)*
- *Florist (Individual establishment not to exceed 2,500 square feet of gross floor area)*
- *Pet Supply Shop (Individual establishment not to exceed 2,500 square feet of gross floor area; shall not include sales of live animals)*
- *Commercial School (Permitted throughout district except if the lot contains frontage on York Street, Woodbridge Road or Long Sands Road, the use shall be located on the second floor or higher and individual establishment not to exceed 2,500 square feet of gross floor area)*
- *Day Care Facility (Individual establishment not to exceed 2,500 square feet of gross floor area)*
- *Produce Store- such as,but not limited to small grocery stores selling meats, cheeses, fruits and vegetables or other similar goods (Individual establishment not to exceed 2,500 square feet of gross floor area)*
- *EXPRESSLY PROHIBITED Motel/Hotel; Fast Food Restaurant, whether the use is a principal use or an accessory use; Formula Restaurant, whether the use is a principal use or an accessory use; Truck Stop; Marina; Medical Marijuana Production Facility; Medical Marijuana Registered Dispensary; Dry Cleaning Facility.*

Back to Agenda

Office Use Category (YVC-1 & YVC-2)

- *Business, Financial, Professional or Government Office, Except Town of York or York School District Office (Provided the use does not occupy more than 50% of the street level gross floor area and does not occupy more than 50% of the portion of the building adjacent to York Street, Woodbridge Road or Long Sands Road)*
- *Town of York or York School District Office*
- *Office and or Clinic for Medical, Psychiatric, or Other Health Service for the Examination or Treatment of Persons as Outpatients, including laboratories that are part of such office or clinic (Provided the use does not occupy more than 50% of the street level gross floor area and does not occupy more than 50% of the portion of the building adjacent to York Street, Woodbridge Road or Long Sands Road)*
- *Radio or Television Studio (provided such us is located on the second floor or above and does not include a tower or antenna)*

Civic & Public Use Category (YVC-1 & YVC-2)

- *Cemetery*
- *Civic Use*
- *Cultural Facility*
- *Essential Service*
- *Hospital (Shall only be permitted within hospital overlay district)*
- *Medical Facility(Shall only be permitted within hospital overlay district)*
- *Nursing Home (Shall only be permitted within hospital overlay district)*
- *Membership Organization (provided such use is located on the second floor or above another permitted use)*
- *Municipal Use*
- *Religious Use*
- *School*
- *Utility District*

- *EXPRESSLY PROHIBITED:*

Back to Agenda

Industrial Use Category (YVC-1 & YVC-2)

- *Printing, Binding, Publishing and Related Arts and Trades(Individual establishment not to exceed 2,500 square feet of gross floor area)*
- *Bottling of Beverages (permitted only as accessory to an Artisanal Food and/or Beverage Facility)*
- *EXPRESSLY PROHIBITED: Waste Processing or Disposal Facility; Bulk Fuel Storage; Truck Terminal; Waste Transfer Facility; Bulk Storage Collection Bin; Wood Manufacturing and Fabrication; Wholesale Business and Storage in a Roofed Structure; Machine Shop, Assembly, Packaging, or Manufacturing.*

Vehicular Use Category (YVC-1 & YVC-2)

- *EXPRESSLY PROHIBITED: Sale, Rental and Accessory Storage of Automobiles, Light Trucks, Motorcycles, and Mopeds Conducted Wholly or Partially in Open Lots; Sale of Pickup Coaches, Campers, Tent Trailers and Similar Equipment, including Snowmobiles; Salvage Yard, Junk Yard, Wrecking Yard; Car Washing Establishment; Vehicle Service Station, Auto Repair Garage; Auto Body Repair Shop; Place for Repair, Sale, Rent or Storage of Pleasure Boats.*

Rural & Agricultural Use Category (YVC-1 & YVC-2)

- *Soil and Water Conservation Practices – Conducted in accordance with the standards of the USDA Natural Resources Conservation Service including but not limited to creation and maintenance of farm ponds for agricultural purposes.*
- *Aquaculture*
- *General Purpose Farm, Agriculture and Nursery*
- *Timber Harvesting*
- *Forest Management Activity, except for Timber Harvesting*
- *Sale of Produce Raised on Same Premises*
- *Wildlife Management Practice*
- *Harvesting of Wild Crops*
- *EXPRESSLY PROHIBITED: Commercial Stable; Veterinary Establishment, Kennel, or Similar Establishment; Mineral Exploration; Sand/Gravel Pit, Quarry, etc.*

Back to Agenda

Recreation & Amusement Use Category (YVC-1 & YVC-2)

- *Indoor Amusement/Entertainment/Assembly Place which may include a performing arts facility (Enclosed and individual establishment not to exceed 5,000 square feet of gross floor area)*
- *Open Air Venue/Area for Theatrical and Musical Performances (capacity not to exceed 300 persons)*
- *Indoor Sports Facility (No Gambling)*
- *Outdoor Sport and Amusement Facility*
- *EXPRESSLY PROHIBITED: Campground; Travel Trailer Park; Amusement Arcade (as Primary or Accessory Use); Drive-In Theater; Bath House for Non-Commercial Purposes; Country Club.*

Miscellaneous Use Category (YVC-1 & YVC-2)

- *Pier, Dock, Wharf, Breakwater, Causeway, Bridge or Other Structure or Use Extending Over or Below the Normal High Water Mark – Temporary or Permanent.*
- *Mortuary, Undertaking or Funeral Establishment (Individual establishment not to exceed 2,500 square feet of gross floor area)*
- *Lettering or Sale of Gravestones (Individual establishment not to exceed 2,500 square feet of gross floor area)*
- *Filling or Other Earthmoving Activity*
- *Road or Driveway Construction*
- *Structure Accessory to Permitted Use – If the principal structure or principal use is a dwelling unit, an accessory structure shall not have cooking facility and shall not have more than one of the following: living facility, sanitary facility or sleeping facility.*
- *Accessory Use Customarily Incident to Allowed Use*
- *Use Similar to Permitted Use*
- *EXPRESSLY PROHIBITED: Casino; Head Shop; Obscene Exhibition; Dump; Billboard; Flea Market; Use Similar to Prohibited Use; Drive through facility.*

Back to Agenda

Amendment: In Article 5, Dimensional Regulations, add a new YVC-1 and YVC-2 Zoning Districts (village core and village peripheral) to 5.2.2 – Other Districts with the following dimensional requirements and amended footnotes:

Dimensional Regulations

NEW ZONING DISTRICT	BUS-1 BUS-2	YBVC	GEN-1 GEN-2	GEN-3	*York Village Center-1*	*York Village Center-2*
Minimum Land Area (Sq. Feet)						
w/o year-round public water or sewer	43,560	20,000	130,680	43,560	*20,000*	*20,000*
with year-round public water	43,560	20,000	130,680	43,560	*20,000*	*20,000*
with year-round public water and sewer	30,000	5,000	130,860	30,000	*5,000*	*10,000*
Minimum Street Frontage (Feet)						
w/o year-round public water or sewer	135	100	200 e	125 e	*100*	*100*
with year-round public water	135	100	200 e	125 e	*100*	*100*
with year-round public water and sewer	135	50	200 e	100 e	*50*	*50*
Minimum Lot Depth (Feet)	100	None	None	None	*None*	*None*
Minimum Front Yard Setback (Feet)						
w/o year-round public water or sewer	30	20 b	50 k	30 k	*N/A*	*15v*
with year-round public water	30	20 b	50 k	30 k	*N/A*	*15v*
with year-round public water and sewer	30	None	50 k	30 k	*N/A*	*15v*
Maximum Front Yard Setback (Feet)	N/A	N/A	N/A	N/A	*15 v*	*N/A*
Minimum Rear Yard Setback (Feet)						
w/o year-round public water or sewer	20	12	30 k	20 k	*12*	*12*
with year-round public water	20	12	30 k	20 k	*12*	*12*
with year-round public water and sewer	20	10	30 k	20 k	*6*	*12*
Minimum Side Yard Setback (Feet)						
w/o year-round public water or sewer	20	12	30 k	20 k	*12*	*12*
with year-round public water	20	12	30 k	20 k	*12*	*12*
with year-round public water and sewer	20	5 t	30 k	20 k	*6t*	*6t*
Maximum Coverage (Impervious Surface Ratio)	25%	100%	25% l	25% l	*75% x*	*75%*
Maximum Building and Structure Height (Feet)	35	35 u	35	35	*35*	*35*
Maximum Building Footprint (Square Feet)	N/A	N/A	N/A	N/A	*7,000*	*7,000*
		AMENDED ~~**11/04/08**~~				

Back to Agenda

Note: These footnotes apply to the Dimensional Regulation Tables identified in Sections 5.2.1, 5.2.2, 5.2.3 and 5.2.4

FOOTNOTES

t Where the owners of 2 adjoining buildings agree, in writing, to connect their buildings, the side yard setback requirement may be waived by the Town, provided the Fire Chief with jurisdiction approves the request. The Fire Chief's decision shall be based on public safety standards, taking into account life-safety code requirements, ability to access the building inside and out during an emergency, and other matters relevant to the situation. *Lots within the YVC-1 and YVC-2 districts shall have a minimum side yard setback of 6 feet except that this may be reduced to 0 feet, provided the cumulative side yard setbacks are not less than 12 feet.*

v The maximum front setback of 15 feet may be increased in the YVC-1 district if the space within the setback is devoted to open air use for the public. Examples may include, but not be limited to, space for outdoor seating, gardens, pocket parks, green space etc.) as determined by the Planning Board. The minimum front setback in the YVC-2 district is 15 feet or no more than the average depths of adjacent front lots, whichever is lesser.

x The maximum lot coverage may be increased up to 100% if the owner provides innovative stormwater design using low impact development (LID), public space, and/or innovative landscape design as determined by the Planning Board.

Amendment: In Article 5, Dimensional Regulations, add YVC-1 and YVC-2 to section 5.3.3 regarding minimum floor space in a multifamily unit as follows:

5.3.3 Provisions Applicable to RES-1, RES-2, RES-3, GEN-1, GEN-2, GEN-3, *YVC-1 & YVC-2* Districts

Amendment: In Article 5, Dimensional Regulations, repeal section 5.4.12 regarding York Village Apartments in the GEN-3 Zone as follows:

5.4.12 ~~York Village Apartments~~ *Reserved.*
~~In the GEN-3 Zone easterly of Long Sands Road (on the north side of York Street) and easterly of Lindsay Road (on the south side of York Street), the number of dwelling units permitted above a commercial or office use shall not be limited by lot size or the density limits specified in §5.4.1. **AMENDED 11/03/09**~~

Amendment: In Article 6, Supplemental Use Requirements, specifically 6.1 Non-Residential Performance Standards, add YVC-1 and YVC-2 as follows:

6.1 Non-Residential Performance Standards -- Applicable to RES-1, RES-2, RES-3, YBVC, *YVC-1, YVC-2*, GEN-1, GEN-2, and GEN-3 Districts

Any non-residential development and use shall meet or exceed the Performance Standards listed below to the greatest extent practical.

Back to Agenda

Amendment: In Article 6, Supplemental Use Requirements, specifically 6.1.8.3 regarding screening of non-residential uses add the following language:

6.1.8.3 Boundaries with existing residential properties shall be screened with a dense evergreen hedge six (6) feet or more in height. Non-residential developments shall have screening at least twenty (20) feet in depth along all side and rear lot lines. Screening may include, but not be limited to, evergreen shrubs, trees, fences, earth or wall berms or any combination thereof, forming a visual barrier not less than six (6) feet in height. (Except, chain-link fencing that includes interwoven plastic or metallic slats or interwoven fabric shall be prohibited.) The Planning Board, by written waiver, may reduce the depth of screening to eight (8) feet, if the Planning Board determines that the results of such waiver will not be inconsistent with the purposes of this ordinance, that the public's health, safety and general welfare will be adequately protected and that reduction will not significantly deprive neighboring properties of the protections provided by this ordinance. *YVC-1 and YVC-2 districts are exempt from this provision except for lots within those districts that are adjacent to a residential district; or historic district, site or landmark as designated in Article 12-Historic and Archeological Resources of this ordinance.*

Amendment: In Article 6, Supplemental Use Requirements, specifically 6.1.8.5 regarding buffer strip requirements for separating parking or storage areas add the following language:

6.1.8.5 All parking or storage areas shall be separated from any public street by a landscaped buffer strip at least 15 feet wide, planted with shade trees (minimum 2" caliper, planted at least every 50 feet along the street frontage) and dense medium height shrubs (three feet in height) to screen parked vehicles. *With the exception of storage areas, this provision shall not apply to the YVC-1 and YVC-2 districts.*

Amendment: In Article 6, Supplemental Use Requirements, specifically 6.1.12 Relation of Proposed Building to Environment, add the following language:

6.1.12 Relation of Proposed Building to Environment

Proposed structures shall be related harmoniously to the terrain and to existing buildings in the vicinity that have a visual relationship to the proposed buildings. The achievement of such relationship may include the enclosure of space in conjunction with other existing buildings or other proposed buildings and the creation of focal points with respect to avenues of terrain features or other buildings. In areas with a high concentration of historic properties, the Board may require new construction to utilize exterior building materials which harmonize with surrounding properties, and to be designed so as not to be architecturally incompatible in terms of scale, height, window size, and roof pitch.

Back to Agenda

6.1.12.1 YVC-1 and YVC-2 Non-residential Performance Standards

The Planning Board shall give consideration to how any proposed project within the YVC-1 and YVC-2 districts enhance the traditional northern New England village character of the York Village Center Districts, in a manner consistent with the Comprehensive Plan. Proposed buildings or other structures must be designed and constructed so as to respect the historic architectural styles of existing buildings.

All new buildings and major renovations will complement the best village and architectural character in terms of scale, proportion, building height, window size, roof pitch, and exterior building materials. For major renovations to existing buildings that trigger Planning Board Review per Article 18.15-E, the removal of distinctive materials or alteration of features that represent the best architectural character of a property shall be avoided. New buildings shall not diminish the prominence of existing church steeples or historic markers. The following materials are expressly prohibited from building exteriors in YVC-1 and YVC-2: vinyl siding, aluminum siding, Exterior Insulation and Finishing System ("EIFS"), foam or PVC materials.

Amendment: In Article 6, Supplemental Use Requirements, specifically 6.2 Commercial Development Requirements, add reference to the YVC-1 and YVC-2 districts as follows:

6.2 Commercial Development Requirements -- Applicable to RES-1, RES-2, RES-3, YBVC, *YVC-1, YVC-2*, GEN-1, GEN-2, and GEN-3 Districts

No residential building may be altered or converted to a commercial use without the required density, setbacks, or parking.

Amendment: In Article 7, Special Provision, specifically 7.1-A regarding Temporary Use of Manufactured Housing Unit, add reference to the YVC-1 and YVC-2 districts as follows:

7.1 Temporary Use of Manufactured Housing Unit

Any person who can show good intentions of building a home may apply to the Board of Selectmen for a permit to locate a manufactured housing unit or recreation vehicle on the proposed home site during the construction of said home for a period of one year. If the applicant, at the end of one year, has not finished the proposed home to a livable state, the applicant may re-apply to the Board of Selectmen for a maximum of twelve (12) months extension of said permit. The Board of Selectmen, after being satisfied of good faith on the part of the applicant, may issue such permit for one year and extend such permit not to exceed twelve (12) months beyond the initial year. This allowance shall apply within the following zones:

A. RES 1-A, RES 1-B, RES-2, RES-3, YBVC, *YVC-1, YVC-2*, GEN-1, GEN-2 and GEN-3 base zoning districts;

Back to Agenda

Amendment: In Article 7, Special Provisions, 7.5-Conversion of Historic Buildings, specifically 7.5.1 and 7.5.1.1, add reference to the YVC-1 and YVC-2 districts and correct a reference to the former BUS-3 district by replacing it with YBVC as follows:

7.5 Conversion of Historic Buildings

The provisions of §7.5 shall be available only for a building that is a contributing building in a Local Historic District or that is listed in this Ordinance as an Historic Landmark.

7.5.1 Provisions Applicable to RES-5, RES-6, RES-7, YBVC, *YVC-1 and YVC-2* Districts

7.5.1.1 The Planning Board may review and authorize the conversion of an existing large single-family dwelling or other building to accommodate more than one family and or commercial use in the ~~BUS-3~~ *YBVC*, *YVC-1 and YVC-2* zones provided that all the following conditions are met:

a. The house or building has at least 5,000 square feet of gross living area.

b. The house or building shall be located on a lot served by public water and public sewer.

c. The house or building has historical significance in accordance with Section 7.5.1.2 below.

Amendment: Repeal Article 3 Section 3.15 York Village Center Overlay District and Article 10-E, York Village Center Overlay District:

~~**3.15 York Village Center Overlay District**~~

~~The York Village Center Overlay District shall include the property as shown on a map entitled, "York Zoning Ordinance: York Village Center Overlay District" dated April 27, 2015. **Amended 5/20/2006; 11/03/2015**~~

and;

~~**ARTICLE TEN-E**~~
~~**YORK VILLAGE CENTER OVERLAY DISTRICT**~~

~~**10-E.1 Purpose**~~

~~In keeping with the policies of the Comprehensive Plan, the purpose of this overlay district is to allow higher lot coverage to better match existing development patterns and to accommodate new municipal facilities in York Village.~~

Back to Agenda

~~**10-E.2 Lot Coverage Limits**~~

~~Within this Overlay District, maximum lot coverage shall be 50%. However, the Planning Board may increase the maximum permitted lot coverage to 75% in exchange for increased buffers and/or other impact mitigation, including but not limited to enhanced stormwater drainage systems, as determined appropriate by the Planning Board. These limits shall supersede lot coverage limits in the base zoning district, as allowed per §21.2. **Amended 5/20/2006**~~

~~**10-E.3 Municipal Building Height**~~

~~Building height for a principal municipal building shall not exceed 50 feet. This standard shall supersede more restrictive building height limits imposed by the base zone, as allowed by §21.2. **AMENDED 5/19/2007**~~

Amendment: In Article 10-B, York Village Hospital Overlay District, add the following provision to 10-B.2 Design Standards regarding building footprint limitations:

G. *Building Footprint. Maximum Building Footprint requirements shall not apply within this overlay district.*

Amendment: In Article 15, Parking, add a new parking performance standards section for the YVC-1 & YVC-2 Zoning District as follows:

15.3 Parking Performance Standards in the YVC-1 & YVC-2 Zoning Districts

The parking standards of §15.1.1.2 are national standards based on suburban-style development, where people drive rather than walk or bike from one use to the next. Such standards are completely unsuitable in a village area which is focused on pedestrian movement, and will in fact result in designs which may completely be out of character with the Town's design goals for this village. Parking spaces shall be provided to conform to the number required in this section. Where a proposed use does not fall clearly into one of the listed activities, the Board shall determine the activity which most closely resembles the proposed use, and the proposed use shall comply with the parking standards of that category.

A. *Alternative Standard for Required Parking in YVC-1 & YVC-2. Parking requirements in the YVC-1 and YVC-2 base zones shall be 50% of that specified in §15.1.1.2.*

B. *Change or Expansion of Non-Residential Use without Building Enlargement in YVC-1 & YVC-2. A change of use from one non-residential use to another, or an expansion of a non-residential use, shall trigger parking analysis subject to (§15.3-E) below, unless the change or expansion of use is found to be in compliance with (§15.3-A) above.*

C. *Parking Non-Conformity in YVC-1 & YVC-2. The provisions of §17.4.B, which require lessening of non-conformity, shall not apply to parking in the YVC-1 & YVC-2 base zones.*

Back to Agenda

D. *Parking in the Front Yard.* *No portion of any lot which is used to satisfy the front yard requirements of this ordinance shall be used for parking. Parking shall be located in the rear of the lot (behind the building), unless the applicant can demonstrate to the Planning Board the need for parking to be located on the side of the building using pertinent standards located in §15.3-E and §15.3-F below.*

E. *Parking Requirement Reduction.* *The Planning Board may reduce off-street parking requirements of proposals in the YVC-1 & YVC-2 districts greater than what is specified in this section provided the Board considers the following:*

1. *Where legal on-street parking is located within 1,000 feet of a non-residential use and the Board determines that this parking will be available to meet some or all of the parking demand for the particular use(s).*
2. *Where publicly supplied off-street parking is located within 1,000 feet of a nonresidential use and the Board determines that this parking will be safe, convenient, and available to meet some or all of the parking demand.*
3. *Where it is clearly demonstrated that the parking demand will be lower than that established by this section and that the reduction will not detract from neighborhood property values, inconvenience to the public, or increase congestion on adjacent streets.*
4. *For the reuse or redevelopment of a parcel, if the Planning Board determines that the new use will not significantly increase the demand for parking compared to the former use except as prescribed in §15-3-B above.*
5. *If the Planning Board determines that the demand for parking will be less than the required standard because some customers/users will walk or take alternative transportation to the site. In these cases, the owner of the property seeking the reduction or their representative, shall be responsible for providing documentation to the Planning Board substantiating the reduced parking demand or alternative supply.*

F. *Additional Modified Parking Standards.* *In applying or modifying the parking standards for any proposed use in the YVC-1 & YVC-2 districts, the Planning Board shall consider:*

1. *Parking spaces shall be sufficient to accommodate the normal day-to-day residential or non-residential use.*
2. *The likelihood of people walking or bicycling to the proposed use and the number of bicycle racks proposed. The Board shall consider any plan by the applicant to make the site more appealing for pedestrians and bicyclists.*
4. *The size of the structure and the site.*

Back to Agenda

5. *The environmental, scenic, or historic sensitivity of the site (including applicable limitations on impermeable surfaces). In cases where sufficient area for parking cannot be created on the site without disturbance to these resource values, the board may require a reduction in the size of the structure so that the available parking will be sufficient.*

6. *The availability of on-street parking.*

7. *Availability of off-site off-street parking that is open to the public, the owner, controlled by the applicant, or available on a shared unit basis. Availability of accessible satellite parking shall also be considered.*

8. *Accessibility to public transit facilities such as public bus stations or routes, or scheduled bus services to the site.*

9. *Other standards used in generally accepted traffic engineering and planning manuals.*

G. *Parking requirements for residential dwellings and related uses. The requirements of §15.3-A above may be waived for applications that involve dwelling units with less than 1,000 square feet of floor area and elderly or workforce housing as defined in this ordinance. These requirements may also be waived if the applicant can demonstrate that all required parking can be accommodated through mixed use development, shared parking or other situations deemed acceptable by the Planning Board as prescribed in §15.3-E and §15.3-F above.*

Amendment: In Article 16, Sign Standards, add YVC-1 and YVC-2 in the following Summary Table of Dimensional Standards:

Back to Agenda

Summary Table of Dimensional Standards for Signs

Type of Sign	Zoning District	Maximum Sign Area	Total Number Allowed	Min. Setback	Maximum Height
A-Frame Signs	All Zones	8 sq. ft.	1 per business	n/a	4 ft.
Blade Signs	All except RES-1-A, RES 1-B, RES-2, RES-3	8 sq. ft.	1 per 1st floor business	n/a	12 ft.
	RES-1-A, RES 1-B, RES-2, RES-3	4 sq. ft.	1 per principal use	n/a	12 ft.
Directory Sign	All Zones	4 Sq. ft .	1 per public entrance	n/a	n/a
Freestanding Signs ***Multiple Business Signs***	Route 1 Zones	100 sq. ft.	1 per lot, unless lot fronts on more than one road	12 ft.	15 ft.
	BUS-1, BUS-2, GEN-1, GEN-2, GEN-3, RES-4, RES-5, RES-6, RES-7, YBVC, *YVC-1 & YVC-2*	64 sq. ft.	1 per lot, unless lot fronts on more than one road	12 ft.	12 ft.
Freestanding Signs	Route 1 zones	48 sq. ft.	1 per lot, unless lot fronts on more than one road	12 ft.	15 ft.
	BUS-1, BUS-2, GEN-1, GEN-2, GEN-3, RES-4, RES-5, RES-6, RES-7, YBVC, *YVC-1 & YVC-2*	20 sq. ft.	1 per lot, unless lot fronts on more than one road	12 ft.	12 ft.
	RES-1-A, RES 1-B, RES-2, RES-3	4 sq. ft.	1 per principal use	n/a	12 ft.
Identification Sign	All Zones	3 sq. ft.	n/a	n/a	7 ft.
New Business Openings	Route 1 Zones	32 sq. ft.	1 per business	n/a	n/a
	All Other Zones	20 sq. ft.	1 per business	n/a	n/a
Open Flags	All Zones	15 sq. ft (3ft. X 5ft.)	1 per business	n/a	n/a
Open House	All Zones	5 sq. ft.	4 per open house	n/a	n/a
Temporary Development	All Zones	16 sq. ft. each/32 sq. ft. total	n/a	n/a	n/a
Temporary Event Signs	Route 1 Zones	32 sq. ft.	1 per business, unless lot fronts on more than one road	n/a	n/a
	All Other Zones	20 sq. ft.	1 per business, unless lot fronts on more than one road	n/a	n/a
Temporary Real Estate Signs	Route 1 Zones	12 sq. ft.	1 per unit for sale for each street frontage	n/a	n/a
	All Other Zones	5 sq. ft.	1 per unit for sale for each street frontage	n/a	n/a
Wall Signs	All Zones	25 sq. ft or 10% of wall area	1 per business	n/a	15 ft.
Window Signs	All Zones	25% of window surface	n/a	n/a	n/a
Yard Sale Signs	All Zones	5 sq. ft. each	4 signs off premise	n/a	n/a

Back to Agenda

Amendment: In Article 17, Non-Conforming Situations, specifically 17.3.4-Dimensional Requirements for Non-Conforming Lots of record, add YVC-1 and YVC-2 to 17.3.4.2 as follows:

17.3.4.2 In Districts GEN-1, GEN-2, GEN-3, *YVC-1, YVC-2,* RES-1, RES-2, and RES-3 side yard setbacks must be at least 12% of the width, and the rear yard setback must be at least 12% of the average depth, but in no case may the side yard or rear yard setback be less than 5 feet, and in no case shall setbacks for non-conforming lots of record be made to be greater than that required for conforming lots in that base zone *unless prescribed elsewhere in this ordinance.*

Amendment: In Article 18, Administration, specifically 18.15 Delegation of Site Plan Review Authority, add the following section regarding the Planning Boards jurisdiction to review site plans in the YVC-1 and YVC-2 districts:

E. Regarding non-residential development in the YVC-1 and YVC-2 districts. In addition to applicable Planning Board authorization to regulate sites; any non-residential development that results in the alteration of more than 50% of the exterior façade, any expansion of 1,500 square feet of gross floor area or more, or a proposal for a new principle non-residential or mixed-use building shall be subject to applicable Ordinance, Site Plan and Subdivision Regulations.

Back to Agenda

York Village Center Zoning Districts
DRAFT 2/4/2016

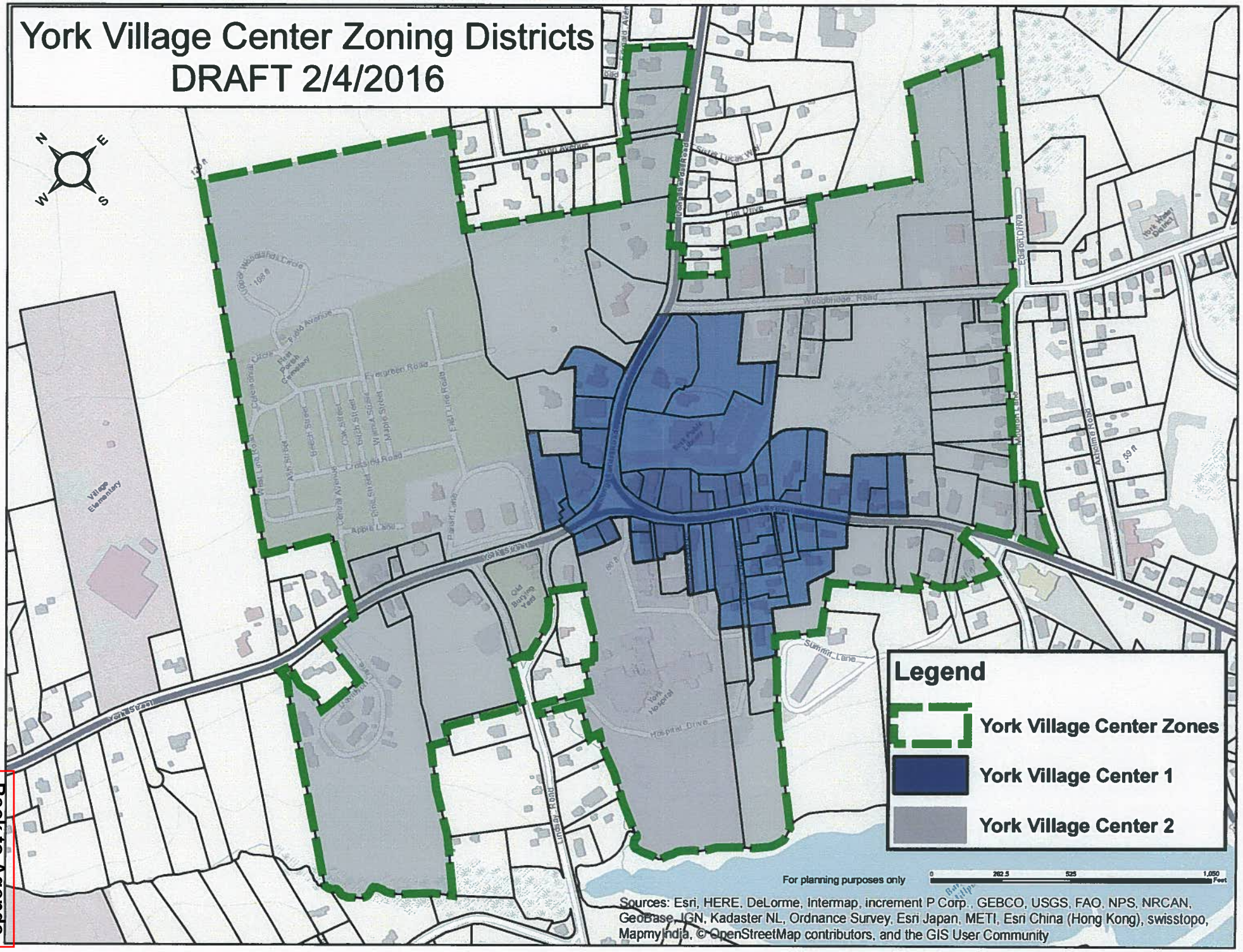

Back to Agenda

York Zoning Ordinance: Base Zoning Districts

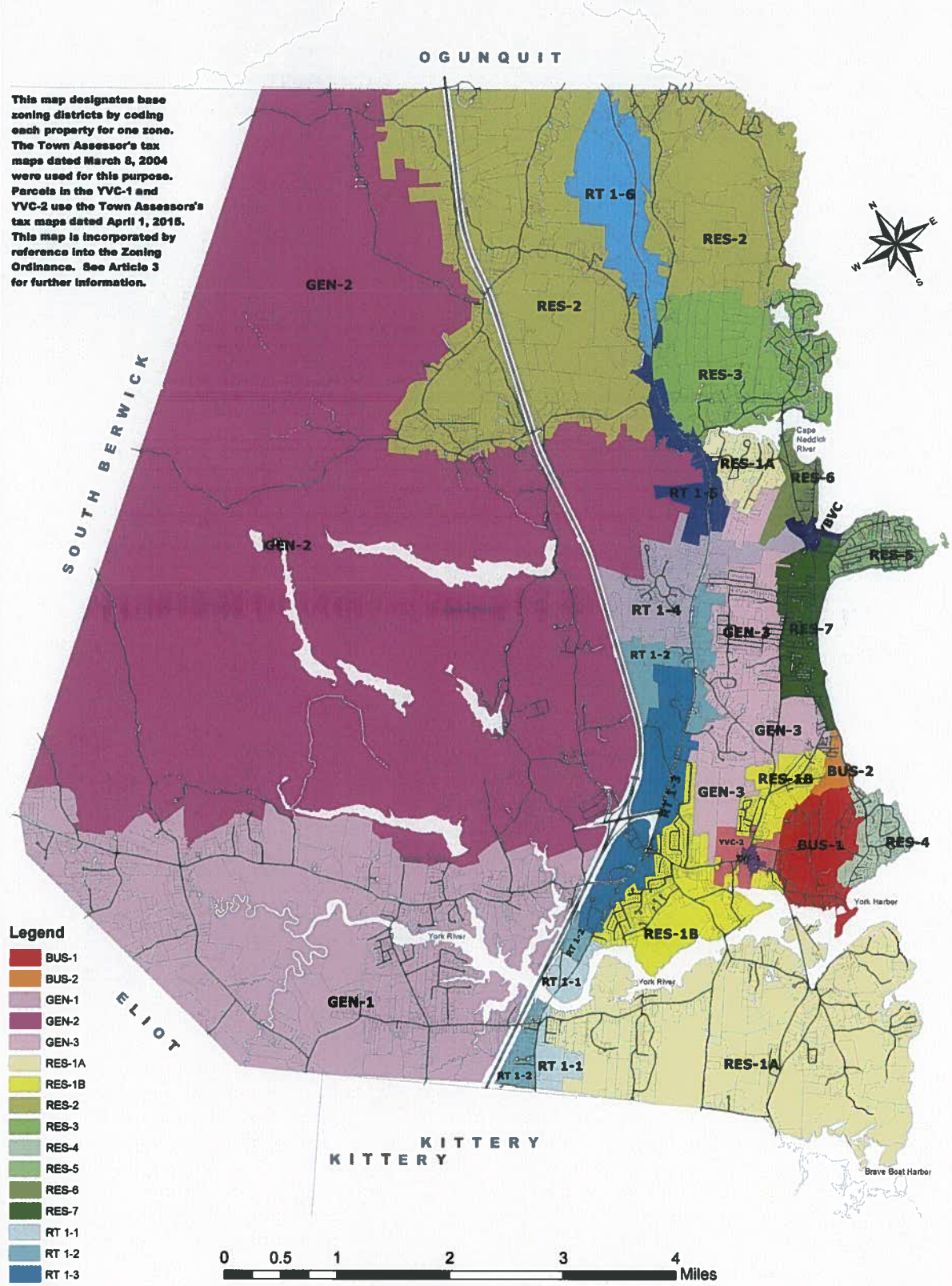

Planning Office
York, Maine
Map Prepared: Februrary 4, 2016

Back to Agenda

REQUEST FOR ACTION BY BOARD OF SELECTMEN

DATE SUBMITTED: February 11, 2016	☒ ACTION
DATE ACTION REQUESTED: February 29, 2016	☐ DISCUSSION ONLY
SUBJECT: Business Licensing Ordinance Amendment	

DISCUSSION OF OPTIONS AVAILABLE TO THE BOARD: Conduct a public hearing on the proposed ordinance amendment. If no further changes are made to the proposed amendment then place it on the May 21, 2016 Special General Referendum ballot. If substantive changes are made then post if for a public hearing on March 28, 2016.

RECOMMENDATION: Hold Public Hearing on proposed ordinance amendment, if no further substantive changes are made to the proposed amendment, approve the amendment as posted to be placed on the May 21, 2016 Special General Referendum Ballot.

PROPOSED MOTION: I move to place the proposed Business Licensing Ordinance Amendment on the May 21, 2016 Special General Referendum ballot.

FISCAL IMPACT: N/A

DEPARTMENT LINE ITEM ACCOUNT: N/A

BALANCE IN LINE ITEM IF APPROVED: N/A

PREPARED BY: Dylan L. Smith, Planning Director REVIEWED BY: _____

Back to Agenda

Amendment #1

Business Licensing Ordinance

Ballot Language: The following language would appear on the ballot:

Article X
The Town hereby ordains amendment of the **Business Licensing Ordinance** to ensure that water and sewer district providers are allowed the opportunity to inspect businesses that may provide food and beverage service prior to the Board of Selectmen issuing a business licensing permit.

Statement of Fact: The purpose of this amendment is to ensure water and sewer district utilities are provided the opportunity to inspect businesses that may provide food and beverage service and are connected to a public water or sewer provider prior to the Board of Selectmen issuing a business license permit. This is intended to ensure businesses that may provide food and beverage service and have water or sewer service hookups are working appropriately and are complying with the specific utility districts service guidelines.

Recommendations:
Recommended by the Board of Selectmen:

Amendment: Amend the Business Licensing Ordinance by incorporating the following language into the applicable sections of the ordinance.

In section 2.5.1- Required Inspections, add the following language:

2.5.1 Required Inspections
Each establishment shall be inspected by Town staff as a condition of the issuance of new license or for renewal. For each license type, the Ordinance specifies which departments *and sewer or water utility districts* are required to inspect and describes the frequency and nature of inspections (see Section 4.2). Submittal of an application to the Town Manager's Office constitutes agreement to make the premises available for inspection during normal working hours. Such inspections shall generally be conducted prior to action by the Board of Selectmen, but may be deferred by the Board if the operation is seasonal and not open at the time of application, or for other good cause.

D. Sewer and Water Utility District Inspection. Sewer and water utility district service inspections are to be conducted by the district providing the service to the establishment. The purpose of sewer and water utility

Back to Agenda

district service inspections is to ensure that sewer and water service is functioning properly for the business utilizing the service and is complying with the districts guidelines for use.

In section 4- Standards, add the following language:

4.1.3 On-Site Septic *or Public Sewer*
If the licensed establishment utilizes a septic system, compliance with Town septic tank pumping requirements shall be required. Compliance shall be verified by the CEO before the Board issues, renews or amends a license. *If the licensed establishment utilizes public sewer through a sewer utility district then the applicant must adhere to any and all applicable requirements of that sewer district. This shall be verified by the sewer district providing the service prior to the Board issuing, renewing or amending a license.*

4.1.4 Grease Traps
If the licensed establishment utilizes a grease trap, compliance with cleaning requirements of State and/or local plumbing codes shall be required. Compliance shall be verified by the CEO before the Board issues, renews or amends a license. *If the applicant is connected to public sewer, compliance shall be verified by the sewer utility district providing service to the establishment before the Board issues, renews or amends a license.*

In section 4.2- License-Specific Standards and Requirements, add the following language:

4.2.1 Bed and Breakfast License
This license shall be required for operation of a Bed and Breakfast as defined in the York Zoning Ordinance. The following shall apply:

A. Inspections Required:
1. Code Inspection - annual.
2. Fire Inspection - annual.
3. *Sewer District - annual.*
4. *Water District - annual.*

4.2.2 Innkeeper's License
This license shall be required for operation of a Hotel, Motel or Inn as defined in the York Zoning Ordinance or Life Safety 101 Code, whichever is more broadly defined. The following shall apply:

A. Inspections Required:
1. Code Inspection - annual.
2. Fire Inspection - annual.
3. *Sewer District - annual.*
4. *Water District - annual.*

Back to Agenda

4.2.3 Food Service License

This license shall be required for any person who prepares and offers for sale food or drink for public consumption on-site (restaurant) or off-site (take-out restaurant), but not for the preparation of packaged foods. This License was formerly called the Victualers License. The following shall apply:

A. The purpose of this license is solely to ensure compliance with the general standards imposed on all licensed businesses. This is not a health-related permit and the Town will not engage in health-related inspection of the premises because the Town does not have certified health inspectors as would be required to inspect per Title 22 M.R.S. §2499.

B. Inspections Required:
   1. Code Inspection - annual.
   2. Fire Inspection - annual.
   3. *Sewer District - annual.*
   4. *Water District - annual.*

4.2.4 Liquor License

This license is required for the sale of liquor (as defined in Title 28-A M.R.S. §2) to be consumed on the premises. The following shall apply:

A. Inspections Required:
   1. Fire Inspection - annual.
   2. Police Inspection - annual.
   3. *Sewer District - annual.*
   4. *Water District - annual.*

4.2.6 Special Amusement License

This license shall be required for an establishment where liquor is sold for on-site consumption and which also provides live music, dancing, and/or entertainment of any kind. The following shall apply:

A. Inspections Required:
   1. Code Inspection – annual.
   2. Fire Inspection – annual.
   3. Police Inspection – annual.
   4. *Sewer District - annual.*
   5. *Water District - annual.*

4.2.7 Dance Hall License

This license shall be required for any establishment with public dancing that is subject to State licensing under Title 8 M.R.S. §161, unless that establishment has a Special Amusement License. The following shall apply:

A. Inspections Required:

Back to Agenda

1. Fire Inspection - annual.
2. Police Inspection - annual.
3. *Sewer District - annual.*
4. *Water District - annual.*

In section 5- Definitions, add the following language:

Sewer District- The public sewer service provider of the establishment.

Water District- The public water service provider of the establishment.

Back to Agenda

THE TOWN OF

YORK, MAINE

186 York Street, York, Maine 03909

BUSINESS LICENSE APPLICATION

NOTE: Business Licenses are not transferable to another person, business or location.

Business Name: _____

Street Address: _____

Business Owner: _____ Business Manager: _____

Mailing Address: _____ Mailing Address: _____

_____ _____

Phone Number: _____ Phone Number: _____

E-mail Address: _____ E-mail Address: _____

Please indicate who is to be the Primary Contact with the Town: ☐ OWNER or ☐ MANAGER

Is the Business Owner same as the prior year? ☐ YES ☐ NO ☐ NEW BUSINESS

Please indicate which Licenses or Local Approvals you seek:

Lodging:

___ Bed and Breakfast License (C/F/S/W)
___ Innkeeper License (C/F/S/W)
Number of Rooms: ____

Entertainment:

___ Special Amusement License (F/P/S/W)
___ Dance Hall License (F/P/S/W)
___ Bowling Alley License (F)
___ Coin-Operated Amusement License (P)
___ Bingo, Beano and Games of Chance

Food and Beverage:

___ Food Service License (C/F/S/W)
Number of Seats: ____ / ____ (Existing / Proposed)
___ Liquor License (F/P/S/W)
___ Bottle Club License (F/P/S/W)

Miscellaneous:

___ Transient Seller's License
___ Flea Market License
___ Junkyard, Auto Graveyard/Recycling License
___ Other: _____

C – Code Enforcement Inspection Required F – Fire Department Inspection Required P – Police Department Inspection Required
S – Sewer District Inspection Required W – Water District Inspection Required

Code Enforcement: (207) 363-1002 Police Department: (207) 363-1031

Village Fire Department: (207) 363-1015 Beach Fire Department: (207) 363-1014

York Sewer District: (207) 363-4232 York Water District: (207) 363-2265

Other Municipal Water and Sewer Districts may apply depending on your business location

- CONTINUE TO BACK PAGE OF APPLICATION -

Back to Agenda

Provide the following information about any relevant State licenses:

STATE LICENSE INFORMATION			
ID Number(s):			
Expiration Date(s):			
Classification(s):			

FEES: Each application will incur a $60 fee, plus $30 for each license after the first. All NEW applications will have an additional $50 fee, and all license amendments will have a $25 fee. All fees are to be paid at time of submittal and shall be non-refundable. Cash or Check only; Please make check payable to Town of York.

Please read the following and sign to complete your application:

I understand that a license is required before operating or conducting any business or activity governed by the Town's Business Licensing Ordinance and that ongoing compliance with the provisions of the Town's Business Licensing Ordinance and other applicable Town codes is required throughout the entire license period.

I understand that this Business License Application must be filled out completely, all fees must be paid, and all necessary department inspections must be completed and passed before the license(s) will be considered by the Board of Selectmen.

Business Owner: _____ Have you ever been convicted of a Felony? YES / NO
Signature

Business Manager: _____ Have you ever been convicted of a Felony? YES / NO
Signature

(If either person has a Felony conviction, please attach an explanation of the circumstances)

FOR OFFICE USE ONLY

FEES	Amount	Map – Lot: _____ - _____
Application and First License ($60)		Processed By:
Subsequent Licenses ($30 each)		Received Date:
New License Fee ($50)		Amount Received: $
License Amendment ($25)		Check # _____ or Cash ☐
Other:_____		**LICENSE #:** _____ - _____
TOTAL DUE	$	

Department Approvals	Date of Approval	Department Approvals	Date of Approval
Code Enforcement		Sewer	
Fire		Water	
Police		Tax Collector	

Board of Selectmen _____ *Town Manager for the Board of Selectmen* _____ *Date*	**Special Conditions** *(Attached if Necessary)* **YES NO**

Back to Agenda

REQUEST FOR ACTION BY BOARD OF SELECTMEN

DATE SUBMITTED: February 19, 2016	☒ ACTION
DATE ACTION REQUESTED: February 29, 2016	☐ DISCUSSION ONLY
SUBJECT: Selectmen's Policies	

DISCUSSION OF OPTIONS AVAILABLE TO THE BOARD: At the meeting of February 8th the Board agreed to consider changes to two of the Selectmen's Policies in Section 3: Application & Appointment Procedure for Boards, Commissions, Committees (Not Trusteeships); and the Charter for the Open Space Committee.

I have attached a memo about each of these, along with copies of the current policies.

RECOMMENDATION: Regarding the Application and Appointment Procedure, I recommend no change to the policy.

Regarding the Charter for the Open Space Committee, I recommend the Board repeal this Charter.

PROPOSED MOTION: I offer one motion pertaining to the Open Space Committee Charter, but a second motion would be appropriate if the Board wants to change the Application and Appointment Procedure. The proposed motion is:

I move to repeal the committee charter of the Open Space Committee.

Prepared by Stephen H. Burns, Town Manager: _____

Back to Agenda

MEMO

TO: **Board of Selectmen**

FROM: **Stephen H. Burns, Town Manager** SHB

DATE: **February 19, 2016**

RE: **Selectmen's Policies**

Open Space Committee Charter

I recommend repeal of the charter for the now-defunct Open Space Committee. This Committee hasn't existed for years, though the Charter still exists (copy attached). In reviewing the purpose of this committee, much of this work has been undertaken by the York Land Trust. The Town has partnered with the Land Trust multiple times since this Committee stopped meeting, and every time asked the voters have endorsed financial support for conservation land acquisitions. Conservation needs are generally well addressed by the Land Trust.

The Parks and Recreation Ordinance (copy attached) charges the Parks and Recreation Board with the functions that were assigned to the Open Space Committee, including open space protection. Perhaps the Board of Selectmen should request a joint workshop and charge the Parks & Rec Board with development of a land needs assessment.

Given that the Parks & Rec Board has this area of responsibility already in its charge, and that every additional committee created places a demand on the budget and staff time, I stand by my recommendation to repeal this charter.

Application & Appointment Procedure

It was noted during the initial discussion that perhaps Section 16 of the policy (copy attached), which pertains to an appointments sub-committee, warranted further discussion. In the policy it calls for annual appointment of a two-member subcommittee, which in turn would conduct the interviews and make recommendations to the Board about appointments. Whether to implement this system or change it is a policy choice for the Board and it seems that either approach would work. In practice, I think the subcommittee to handle interviews would make meeting logistics simpler so my preference would be to leave the policy unchanged and to return to this practice. However, I don't feel strongly one way or the other about this.

Back to Agenda

d.

TOWN OF YORK
Open Space Committee
Approved by Selectmen 7/26/99

PURPOSE:

The Open Space Committee is being established to assist the Board of Selectmen with the implementation of the Open Space Acquisition Account as approved by York Voters on May 22, 1999. The Committees role is advisory to the Board of Selectmen. They shall have the following responsibilities:

1. Identify land for possible purchase with Open Space Funds using the guidelines established by the Selectmen's Policy on the Open Space Fund.

2. Review with the Board of Selectmen all recommended land and easement purchases.

3. The negotiation of land and easement purchases shall be under the direct guidance of the Board of Selectmen.

4. Research alternative and complimentary funding sources such as State, Federal and Local Grants.

COMMITTEE COMPOSITION:

The Committee will be appointed by the Board of Selectmen and will have the following composition:

1. A member of the Conservation Commission
2. A member of the York Land Trust
3. Seven members of the General Public. (Amended per Board of Selectmen on April 22, 2002) The Board would prefer that some of the members in this category have real estate and/or grant writing experience.
4. A quorum shall be a majority of those appointed members who are in attendance at time of vote.

CHAIR & VICE-CHAIR:

The Chair shall be a voting member of the Committee and shall be chosen by majority vote. The Chair will be responsible for the orderly conduct of Committee meetings. A Vice-Chair shall also be chosen by majority vote and shall be a voting member of the Committee. The Vice-Chair shall be responsible to perform the duties of the Chair in the absence of the Chair.

Back to Agenda

MEETINGS AND TIME TABLE:

The Committee shall determine meeting times and dates. All meetings shall be held in public and properly noticed. In the event the Committee must enter into Executive Session to discuss the purchase of property, the Committee shall comply with MRSA Title 1, Section 405 of State Law. The Committee shall use the privilege of executive sessions only when absolutely necessary to protect the interests of the Town or property owners.

Back to Agenda

Town of York

Parks and Recreation Ordinance

Establishment

There shall be a Parks and Recreation Board, which shall consist of members appointed by and responsible to the Board of Selectmen. The responsibility of the Parks and Recreation Board is to advise the Selectmen on public parks, beaches and recreation issues. The Board will serve in an advisory capacity and will have no supervisory authority over the Parks and Recreation Department. The Board will work with the Parks and Recreation Director to develop a master plan for open space, parks, recreation and beaches as well as discuss issues pertaining to recreation policies and park and beach operations. Recommendations from the Board will be brought to the Board of Selectmen for subsequent review.

Membership; Appointment; Term

The Parks and Recreation Board shall be composed of five (5) members, each of whom shall be appointed by the Board of Selectmen. Members shall be appointed for three year staggered terms or until their successor is appointed or qualified. The present Recreation and Parks Committees shall constitute the Parks and Recreation Board under this ordinance and each member thereof shall serve the remainder of his term. Both the current Recreation Committee and Parks Commission will be phased out with the members serving the remainder of their terms on the Park and Recreation Board.

Qualifications

Board members shall be registered voters of the Town of York.

Vacancies

If a seat on the Parks and Recreation Board becomes vacant, the vacancy shall be filled by appointment of the Board of Selectmen for the unexpired term, as soon as possible after the vacancy occurs.

Back to Agenda

Powers and Duties

The Parks and Recreation Board shall advise the Board of Selectmen on issues pertaining to public parks, beaches and recreation.

The Board of Selectmen will provide the Parks and Recreation Department with a list of all town owned buildings and properties for which they will be responsible. This list will be updated in writing as necessary.

Compensation

Park and Recreation Board members shall receive no compensation for their services.

Meetings

Induction of Board members into office: The Board shall first meet at the usual place for holding meetings at 7:00 P.M. on the first Wednesday of the month following the enactment of this ordinance. Members-elect shall be sworn to the faithful discharge of their duties by the Town Clerk.

Regular meetings: The Board may, at its first meeting or as soon thereafter as possible, establish by-laws or regulations, a regular place and time for holding its regular meeting and shall meet regularly at least once a month. It shall also provide a method for calling special meetings. Actions of the Board shall be recorded by the secretary of the Board, and a copy thereof shall be filed with the Board of Selectmen within a reasonable time after such action is taken.

As indicated by 1 M.R.S.A. 406, there shall be public notice of all Board meetings.

Attendance at Meetings

Board members shall not absent themselves from more than 3 consecutive meetings without obtaining an excuse from the Board. Failure to obtain such excuse shall create a presumption that the Board member has resigned his or her membership upon the Board and the Chairman of the Board shall thereupon promptly notify the Town Manager of such presumption and the Board of Selectmen shall promptly fill said vacancy after affording the unexcused member an opportunity to appear and be heard and show just cause for failure to obtain the required excuse.

Back to Agenda

Chairman: At its first meeting or as soon thereafter as practicable, the Board shall elect, by majority vote of the entire Board, one of its members to serve for the ensuing year as chairman, and the Board may fill, for an unexpired term, any vacancy in the office of chairman that may occur. The chairman shall preside at the meeting of the Parks and Recreation Board and shall be recognized as the head of the Board for all ceremonial purposes. In the temporary absence or disability of the chairman, the Board may elect a chairman Pro tempore from among its members. He or she shall have all the powers as chairman during such temporary absence or disability of the chairman.

Quorum: A simple majority of the Parks and Recreation Board members shall constitute a quorum for the transaction of business. If a quorum is not present and those who are present adjourn the meeting with the intent to reconvene when a quorum will be present, at least twenty-four (24) hours notice of the reconvening shall be given to all members who were not present at the meeting which was adjourned. Notice shall also be given in the same manner to media representatives.

Rules and Procedure: The Board shall provide for keeping a record of its proceedings and shall determine its own rules of procedure and make regulations for enforcing the same.

Director of Parks and Recreation

Appointment: The Town Manager, with confirmation by the Board of Selectmen, shall appoint a Parks and Recreation Director, who shall perform the duties provided in this ordinance. No member of the Parks and Recreation Board shall receive such appointment during the term of which he shall have been appointed nor within one (1) year after the expiration of his term, nor shall any member of the Board act in this capacity.

Qualifications: In appointing the Director, the Town Manager shall give special consideration to his executive or administrative qualifications and to his actual experience and knowledge of accepted practices with respect to duties of the office as set forth below and referred to in the approved job description.

Chief Administrator: The Director shall be the chief administrative officer of the Parks and Recreation Department and shall be responsible to the Town Manager for the proper administration of all departmental affairs. He shall be required to:

Back to Agenda

Perform the duties as described by the approved job description, in the best interest of the Parks and Recreation Program.

Prepare a budget annually, submit it to the Parks and Recreation Board, the Finance Committee, Town Manager and the Board of Selectmen for review and be responsible for its administration after adoption.

Prepare and submit to the Parks and Recreation Board, as of the end of the fiscal year, a complete report on the finances and administrative activities of the department for the preceding year. A copy of the said report shall be submitted to the Board of Selectmen through the Town Manager.

Attend all meetings of the Parks and Recreation Board, unless excused, and keep the Board advised of the financial condition and future needs of the department and make such recommendations as may be necessary for the successful operation of the department.

Adopted at Special Town Meeting, December 6, 1990.

Back to Agenda

a.

APPLICATION & APPOINTMENT PROCEDURE FOR BOARDS, COMMISSIONS, COMMITTEES (NOT TRUSTEESHIPS)

PREAMBLE: The Board of Selectmen is charged with the responsibility for the appointment of members to various Town-related Boards, Commissions or Committees. The importance of these appointments cannot be over-emphasized because of the tremendous influence the respective Boards, Commissions or Committees have on the direction of York Town government.

1. When a vacancy on a Board, Commission or Committee occurs, the Board of Selectmen is to be notified. (Vacancies arise at the termination of an appointed term, a resignation or a removal from office by the appointing body - the Board of Selectmen).

2. Annually on June 30th, the terms of some members of most Boards, Commissions and Committees will expire. Members whose terms are expiring will serve until a replacement is appointed unless the Board of Selectmen takes a specific action to the contrary on or before June 30th.

3. The Town Manager advertises the position vacancy/vacancies. The Selectmen and others are encouraged to recruit York citizens to apply for any and all vacancies to Boards, Commissions or Committees.

4. Applications forms are available in the Town Manager's or Town Clerk's Office and/or in the back of each year's Town Report.

5. On Boards, Commissions or Committees where there are alternate members, when a vacancy occurs in the full membership, the alternate member(s) will be considered to fill the vacancy unless the alternate member(s) request otherwise.

6. Completed applications, with qualifications, are to be submitted to the Town Manager's Office who advises the Board of Selectmen, at a regular Selectmen's Meeting, that an application is on file.

7. The Board of Selectmen may schedule an interview with the candidate(s) for the vacant position(s). The members of the respective Board, Commission or Committee may make a written recommendation to the Board of Selectmen in regard to the candidacy of any applicant for appointment. However, appointments are at the discretion of the Board of Selectmen.

8. The Board of Selectmen must make appointments to various position vacancies at a public meeting of the Board of Selectmen. The Board of Selectmen should make every effort to make appointments to various position vacancies at a regularly scheduled meeting of the Board.

Back to Agenda

9. Once a person is appointed to a position on a Board, Commission or Committee, the formal document appointing the individual will be prepared and signed by a majority of the members of the Board of Selectmen.

10. The appointee will be duly notified of his/her appointment and will be requested to come to the Town Clerk's Office to be sworn in at the earliest possible date, but in no case more than forty-five days. No appointee shall vote until they have been sworn in. The Chairperson of the appropriate Board, Commission or Committee will be notified of the Selectmen's appointment by the Town Manager's Office and will be provided with the pertinent information concerning the appointee(s).

11. Each appointee will meet with the Chairperson of the respective Board/Commission/Committee for an orientation briefing, providing information on the membership of the Board/Commission/Committee, how it interacts with Town Offices and other Boards/Commissions/Committees, the responsibilities of the specific Board/Commission/Committee to which the individual has been appointed and specific training that would be useful in the performing of the functions. Copies of applicable Board/Commission/Committee documents (ordinances, Minutes, etc.) will be distributed at the orientation briefing. The appointee will also be provided with a regular meeting schedule and location of meetings.

12. The Chairperson will assure that the appointee is introduced to members of the respective Board/Commission/Committee at or before the first regular meeting following the member's appointment.

13. Training (proper preparation for the duties) should be emphasized as an important facet to accepting appointment to any Board/Commission/Committee.

14. Except where ordinances, committees or by-laws require the Board of Selectmen, upon a majority, by vote may appoint a provisional or regular Chair of a newly formed Board, Committee or Commission. The Board of Selectmen may also appoint a provisional Chair of any existing Board, Committee or Commission if the Board, Committee or Commission is unable to elect a Chair after two or more regular meetings.

15. Unless specified by the York Home Rule Charter, the annual organizational meeting of a Board, Commission or Committee shall occur at the first regular meeting after July 1st unless the Board of Selectmen requests that the organizational meeting be delayed until additional appointments are made.

16. Annually, the Chairman shall select two members of the Board to serve as the Appointments Sub-Committee. These two members shall be responsible for interviewing candidates for the various Boards, Commissions and Committees and to make written recommendations on appointments to the full Board. In conducting its interviews, the sub-committee shall notify the full Board when interviews are to be held and shall provide public notice of the interviews.

Back to Agenda

17. Appointment of any Committee Member is at the discretion of the Board of Selectmen. Application for a Committee vacancy does not guarantee appointment to a Committee, even if there is only one applicant.

Adopted at Selectmen's Meeting 7/14/92. Vote: 4-0-0.

Amended at Selectmen's Meeting 12/8/92. Vote: 5-0-0.
Amended at Selectmen's Meeting 7/13/93.
Amended at Selectmen's Meeting 12/28/93. Vote: 4-1-0.
Amended at Selectmen's Meeting 6/14/99. Vote: 5-0-0.

Back to Agenda

REQUEST FOR ACTION BY BOARD OF SELECTMEN

DATE SUBMITTED: February 19, 2016	☒ ACTION
DATE ACTION REQUESTED: February 29, 2016	☐ DISCUSSION ONLY
SUBJECT: Match for York Village Improvements	

DISCUSSION OF OPTIONS AVAILABLE TO THE BOARD: When I presented the draft FY17-21 Capital Budget to the Board of Selectmen back in January, I proposed the voters be asked to decide whether to raise and appropriate $400,000 to be used to match up to $3.6M of State and Federal transportation funds to complete improvements in York Village. I recommended a single vote to ensure the decision is made once and not over multiple years, and to ensure the voters see the entire magnitude of project cost (rather than breaking it out into smaller bits and pieces). Because there are mandatory timeline for spending bond funds, and because we don't know how quickly we'll be receiving the State and Federal funds, I suggested that a cash match would be most suitable.

As the Budget Committee has reviewed the proposed FY17 Town and School operating budgets, it because apparent they believed it would be necessary to reduce the impact to taxpayers. As originally proposed, the Town and School's use of property tax revenues would increase by 4.9% and 6.7% respectively. This would be a large impact.

The most obvious means of reducing the Town's impact is to finance the match for the York Village Improvements. Because this is a unified series of capital projects that will be constructed and last for decades, bond funding for this match is legitimate. The net short term impact of this change is to reduce the Town's increase in use of property taxes from 4.9% to 1.9%.

Financing the match will incur added cost to the Town. $400,000 bonded for 5 years at 2.5% interest will add about $30,000 in interest to the total cost of the match.

My initial concern about bonding this match was the necessity of taking all the money up front but not being able to spend it quickly enough. On checking with the Town's bond counsel, this is not a problem. Voters can approve the project, with a total cost not to exceed $4M and local match not to exceed $400,000, and the amount bonded can be taken out in increments as needed. This allows the bonded match to be obtained in synch with the availability of State and Federal funds, which is likely to be received over multiple years. A letter from our attorney is attached.

Back to Agenda

RECOMMENDATION: I recommend the Board ask the Budget Committee to change the match for York Village improvements from current year funding to bond funding.
PROPOSED MOTION: I move to ask the Budget Committee to change the match for York Village improvements from current year funding to bond funding.

FISCAL IMPACT: This will add about $30,000 to the overall cost of the project (assuming a 5 year bond at 2.5% annual interest)
DEPARTMENT LINE ITEM ACCOUNT:
BALANCE IN LINE ITEM IF APPROVED:

Prepared by Stephen H. Burns, Town Manager: _____

Back to Agenda

York Town Budget

Bond - funding for the $400K match

(Actual means the approved budget, overlay used & Valuation) Description	Actual FY14	Actual FY15	Actual FY16	Budget FY17	FY15 Increase	FY16 Increase	FY17 Increase	FY15 %	FY16 %	FY17 %
Municipal										
Budgeted Expenses	16,922,712	17,488,540	18,095,139	18,860,324	565,828	606,599	765,185	3.3%	3.5%	4.2%
Budget Committee Adjustment				(400,000)						
Adjusterd Budget	16,922,712	17,488,540	18,095,139	18,460,324	565,828	606,599	365,185	3.3%	3.5%	2.0%
Projected Revenue from State	505,000	275,000	269,400	282,000	(230,000)	(5,600)	12,600	-45.5%	-2.0%	4.7%
Other Revenue	4,010,880	4,021,380	4,165,400	4,573,200	10,500	144,020	407,800	0.3%	3.6%	9.8%
Fund Balance	650,000	650,000	600,000	300,000	-	(50,000)	(300,000)	0.0%	-7.7%	-50.0%
Funded from Other Sources	5,165,880	4,946,380	5,034,800	5,155,200	(219,500)	88,420	120,400	-4.2%	1.8%	2.4%
Municipal Amount to be financed by Property Taxes	11,756,832	12,542,160	13,060,339	13,305,124	785,328	518,179	244,785	6.7%	4.1%	1.9%
Schools										
Budgeted Expenses	27,487,166	28,647,341	29,684,473	31,633,315	1,160,175	1,037,132	1,948,842	4.2%	3.6%	6.6%
Budget Committee Adjustment										
Adjusterd Budget	27,487,166	28,647,341	29,684,473	31,633,315	1,160,175	1,037,132	1,948,842	4.2%	3.6%	6.6%
					-	-				
Projected Revenue from State	972,376	1,115,414	1,160,971	1,254,436	143,038	45,557	93,465	14.7%	4.1%	8.1%
Other Revenue	299,928	447,033	376,104	428,559	147,105	(70,929)	52,455	49.0%	-15.9%	13.9%
Fund Balance	403,945	270,150	270,000	200,000	(133,795)	(150)	(70,000)	-33.1%	-0.1%	-25.9%
Funded from Other Sources	1,676,249	1,832,597	1,807,075	1,882,995	156,348	(25,522)	75,920	9.3%	-1.4%	4.2%
Schools Amount to be financed by Property Taxes	25,810,917	26,814,744	27,877,398	29,750,320	1,003,827	1,062,654	1,872,922	3.9%	4.0%	6.7%
Municipal & Schools										
Budgeted Expenses	44,409,878	46,135,881	47,779,612	50,093,639	1,726,003	1,643,731	2,314,027	3.9%	3.6%	4.8%
					-	-				
Projected Revenue from State	1,477,376	1,390,414	1,430,371	1,536,436	(86,962)	39,957	106,065	-5.9%	2.9%	7.4%
Other Revenue	4,310,808	4,468,413	4,541,504	5,001,759	157,605	73,091	460,255	3.7%	1.6%	10.1%
Fund Balance	1,053,945	920,150	870,000	500,000	(133,795)	(50,150)	(370,000)	-12.7%	-5.5%	-42.5%
Funded from Other Sources	6,842,129	6,778,977	6,841,875	7,038,195	(63,152)	62,898	196,320	-0.9%	0.9%	2.9%
Amount to be financed by Property Taxes	37,567,749	39,356,904	40,937,737	43,055,444	1,789,155	1,580,833	2,117,707	4.8%	4.0%	5.2%
County Tax to be financed by Property Taxes	2,406,949	2,390,073	2,416,154	2,442,732	(16,876)	26,081	26,578	-0.7%	1.1%	1.1%
Total Amount to be financed by Property Taxes	39,974,698	41,746,977	43,353,891	45,498,176	1,772,279	1,606,914	2,144,285	4.4%	3.8%	4.9%
Overlay	233,314	146,209	255,837	204,742	(87,105)	109,628	(51,095)	-37.3%	75.0%	-20.0%
Total to be Financed by Property Tax	40,208,012	41,893,186	43,609,728	45,702,917	1,685,174	1,716,542	2,093,189	4.2%	4.1%	4.8%
Taxable Valuation	3,855,034,616	3,915,250,959	3,964,520,605	4,016,059,373	60,216,343	49,269,646	51,538,768	1.6%	1.3%	1.3%
Tax Rate	10.43	10.70	11.00	11.38	0.27	0.30	0.38	2.6%	2.8%	3.5%
Overlay %	0.58%	0.35%	0.59%	0.45%						

Enter Estimated County Tax % Increase 1.1%

Blue Numbers = Formulas Black Numbers = Data Input

Enter Overlay as a % of Amt to be Financed by Property tax 0.45% (.0059=0.59%)

0

Enter Estimated % increase (decrease) in Taxable Valuation 1.3%

Property Value	FY14 Tax	FY15 Tax	FY16 Tax	FY17 Tax	FY 15	FY16	FY17
300,000	3,129	3,210	3,300	3,414	81	90	114
500,000	5,215	5,350	5,500	5,690	135	150	190

Back to Agenda

York Town Budget

Current-year funding for the $400K match

(Actual means the approved budget, overlay used & Valuation) Description	Actual FY14	Actual FY15	Actual FY16	Budget FY17	FY15 Increase	FY16 Increase	FY17 Increase	FY15 %	FY16 %	FY17 %
Municipal										
Budgeted Expenses	16,922,712	17,488,540	18,095,139	18,860,324	565,828	606,599	765,185	3.3%	3.5%	4.2%
Budget Committee Adjustment										
Adjusterd Budget	16,922,712	17,488,540	18,095,139	18,860,324	565,828	606,599	765,185	3.3%	3.5%	4.2%
Projected Revenue from State	505,000	275,000	269,400	282,000	(230,000)	(5,600)	12,600	-45.5%	-2.0%	4.7%
Other Revenue	4,010,880	4,021,380	4,165,400	4,573,200	10,500	144,020	407,800	0.3%	3.6%	9.8%
Fund Balance	650,000	650,000	600,000	300,000	-	(50,000)	(300,000)	0.0%	-7.7%	-50.0%
Funded from Other Sources	5,165,880	4,946,380	5,034,800	5,155,200	(219,500)	88,420	120,400	-4.2%	1.8%	2.4%
Municipal Amount to be financed by Property Taxes	11,756,832	12,542,160	13,060,339	13,705,124	785,328	518,179	644,785	6.7%	4.1%	4.9%
Schools										
Budgeted Expenses	27,487,166	28,647,341	29,684,473	31,633,315	1,160,175	1,037,132	1,948,842	4.2%	3.6%	6.6%
Budget Committee Adjustment										
Adjusterd Budget	27,487,166	28,647,341	29,684,473	31,633,315	1,160,175	1,037,132	1,948,842	4.2%	3.6%	6.6%
					-	-				
Projected Revenue from State	972,376	1,115,414	1,160,971	1,254,436	143,038	45,557	93,465	14.7%	4.1%	8.1%
Other Revenue	299,928	447,033	376,104	428,559	147,105	(70,929)	52,455	49.0%	-15.9%	13.9%
Fund Balance	403,945	270,150	270,000	200,000	(133,795)	(150)	(70,000)	-33.1%	-0.1%	-25.9%
Funded from Other Sources	1,676,249	1,832,597	1,807,075	1,882,995	156,348	(25,522)	75,920	9.3%	-1.4%	4.2%
Schools Amount to be financed by Property Taxes	25,810,917	26,814,744	27,877,398	29,750,320	1,003,827	1,062,654	1,872,922	3.9%	4.0%	6.7%
Municipal & Schools										
Budgeted Expenses	44,409,878	46,135,881	47,779,612	50,493,639	1,726,003	1,643,731	2,714,027	3.9%	3.6%	5.7%
					-	-				
Projected Revenue from State	1,477,376	1,390,414	1,430,371	1,536,436	(86,962)	39,957	106,065	-5.9%	2.9%	7.4%
Other Revenue	4,310,808	4,468,413	4,541,504	5,001,759	157,605	73,091	460,255	3.7%	1.6%	10.1%
Fund Balance	1,053,945	920,150	870,000	500,000	(133,795)	(50,150)	(370,000)	-12.7%	-5.5%	-42.5%
Funded from Other Sources	6,842,129	6,778,977	6,841,875	7,038,195	(63,152)	62,898	196,320	-0.9%	0.9%	2.9%
Amount to be financed by Property Taxes	37,567,749	39,356,904	40,937,737	43,455,444	1,789,155	1,580,833	2,517,707	4.8%	4.0%	6.2%
County Tax to be financed by Property Taxes	2,406,949	2,390,073	2,416,154	2,442,732	(16,876)	26,081	26,578	-0.7%	1.1%	1.1%
Total Amount to be financed by Property Taxes	39,974,698	41,746,977	43,353,891	45,898,176	1,772,279	1,606,914	2,544,285	4.4%	3.8%	5.9%
Overlay	233,314	146,209	255,837	270,799	(87,105)	109,628	14,962	-37.3%	75.0%	5.8%
Total to be Financed by Property Tax	40,208,012	41,893,186	43,609,728	46,168,975	1,685,174	1,716,542	2,559,247	4.2%	4.1%	5.9%
Taxable Valuation	3,855,034,616	3,915,250,959	3,964,520,605	4,016,059,373	60,216,343	49,269,646	51,538,768	1.6%	1.3%	1.3%
Tax Rate	10.43	10.70	11.00	11.50	0.27	0.30	0.50	2.6%	2.8%	4.5%
Overlay %	0.58%	0.35%	0.59%	0.59%						

Enter Estimated County Tax % Increase 1.1%

Enter Overlay as a % of Amt to be Financed by Property tax 0.59% (.0059=0.59%)

Enter Estimated % increase (decrease) in Taxable Valuation 1.3%

Blue Numbers = Formulas

Black Numbers = Data Input

Property Value	FY14 Tax	FY15 Tax	FY16 Tax	FY17 Tax	FY 15	FY16	FY17
300,000	3,129	3,210	3,300	3,449	81	90	149
500,000	5,215	5,350	5,500	5,748	135	150	248

Back to Agenda

Stephen H. Burns

From: Shana Cook Mueller <smueller@bernsteinshur.com>
Sent: Thursday, February 18, 2016 10:37 AM
To: Stephen H. Burns
Cc: Wendy Anderson; Mary E. Costigan
Subject: York Village project and bond article

Hi Steve,

To follow up from our phone call today, I wanted to confirm that a cohesive infrastructure project involving multiple components that is expected to occur over a number of years can be approved by the voters in a single bond issue warrant article. The article would theoretically provide an approval of the project, including a description of the project, an appropriation of the (roughly) $4 million for the project, and a statement that provides the two methods of funding the project, (1) to accept/receive grants from PACTS or other appropriate governmental agency in an amount up to $3.6 million, and (2) to issue bonds in the amount of up to $400,000. The bond article would also include a financial statement, as we always do for bond articles, which will provide an estimate of the debt service costs using an *estimated* particular interest rate and term. An approval of such a bond article would authorize the Town to borrow $400,000 in one bond issue or over multiple years of bond issues that add up to $400,000. It would also allow the Town to accept the grant monies and use them for the project.

I'm happy to draft such an article for you as your process for this project becomes clearer. Please let me know if you have any further questions.

Thank you,
Shana

Shana Cook Mueller
Shareholder
207 228-7134 direct
207 774-1200 main
207 770-2587 fax
My Bio | LinkedIn | Twitter

BERNSTEINSHUR
CELEBRATING 100 YEARS | Portland, ME | Augusta, ME | Manchester, NH

Confidentiality notice: This message is intended only for the person to whom addressed in the text above and may contain privileged or confidential information. If you are not that person, any use of this message is prohibited. We request that you notify us by reply to this message, and then delete all copies of this message including any contained in your reply. Thank you.

Back to Agenda

REQUEST FOR ACTION BY BOARD OF SELECTMEN

DATE SUBMITTED: February 26, 2016	☒ ACTION
DATE ACTION REQUESTED: February 29, 2016	☐ DISCUSSION ONLY
SUBJECT: Maine State Retirement System – Membership Exclusion	

DISCUSSION OF OPTIONS AVAILABLE TO THE BOARD: Attached is a memo to the Board from Liam Gallagher, our Human Resources Director. In this memo he outlines the reasons the Board is being asked to verify the Town's current practice of offering the Maine Public Employees Retirement System benefit only to full-time, permanent employees, as has been the practice since 1948.

There is a question about a couple School employees and their eligibility for this program, and Liam will address this matter with the Board if this proves necessary.

RECOMMENDATION: Send a letter to the Maine Public Employees Retirement System that affirms the Town's practice of offering State retirement only to full-time, permanent employees.

PROPOSED MOTION: I move to continue offering membership in the Maine Public Employees Retirement System Participating Local District Plan for full-time, permanent, employees as defined as those regularly scheduled to work 30 hours each week on a year round basis, and as outlined in the non-union personnel policy, established by practice, and originally intended upon the plan's incorporation. This reaffirmation of eligibility shall provide for, and otherwise not limit, the specific exception of two existing (2) York School Department support staff.

Prepared by Stephen H. Burns, Town Manager: _____

Back to Agenda

Town of York
186 York Street
York, Maine 03909-1314

Liam Gallagher, PHR
Director of Human Resources

P: (207) 363-1000 ext. 232
F: (207) 363-1019

To: Board of Selectmen
From: Liam Gallagher
Subj: Maine Public Employees Retirement System – Membership Exclusion
Date: February 12, 2016

Following the attendance of a Maine Public Employees Retirement System (MainePERS) seminar, a question was raised by administration as to whether or not the Town of York was compliant with chapters 401 and 802 of the MainePERS rules for membership. Chapters 401 and 802 define eligible employees as those working *"15 or more hours per week, 720 hours in a 12-month period or seasonal employees with employment in excess of 5 months"*.

The Town of York, by both practice and policy, extends coverage to full-time, permanent, employees as defined by the non-union personnel policy, or applicable collective bargaining agreement. Per the non-union personnel policy (as approved by the BOS on July 29, 2003), a full-time employee is defined as those who are, *"regularly scheduled to work at least 30 hours each week on a year round basis"* (Section II; K Employee Classifications). Additionally, per Section V; E. Retirement Program, *"The Town of York will offer a choice of retirement programs to all full time employees."*

Given the discrepancy between MainePERS' eligibility rules and the Town's practice and policy, we contacted the Participating Local District (PLD) Administrator for clarification. The Administrator confirmed that if the documents MainePERS had on file for the Town's plan (enclosed), combined with the current policy and practice, substantiated the membership exclusions and the Town could continue its current practice without modification. While current practice is firmly established, MainePERS did request a formal motion by the municipal governing body (Board of Selectmen) reaffirming that the Town's intention is to only provide membership within the narrower eligibility definition.

Taking no action will not invalidate, or necessitate a change to, the current membership practice however it may leave the Town's existing practice open to question or dispute in the future from a narrow group of current or future employees who fall within the MainePERS eligibility guidelines but outside of the Town's narrower definition.

Back to Agenda

Stephen H. Burns

From: Stephanie Fecteau <Stephanie.Fecteau@mainepers.org>
Sent: Friday, January 29, 2016 3:36 PM
To: Liam Gallagher
Cc: Stephen H. Burns; Wendy Anderson
Subject: RE: Town of York: Membership Exclusion
Attachments: York eligibility docs.pdf

Liam,

Thank you for the information you provided today. I have completed my review of the Town's records and didn't find anything to suggest that the Town of York has ever offered MainePERS membership to anyone other than full-time employees. There is a question on two members of the school support side but we can address those as well.

To clear up any confusion in the future and to ensure that our records reflect the intent and practices of the Town, we ask that the current governing body submit an action, clarifying the Town's original intent with regard to MainePERS eligibility for participation.

Attached is a PDF containing two documents I discovered during my review. You'll notice that the Town's original vote to join PERS indicates that participation is for its "permanent" employees. I could not find any documentation that provides the definition of permanent. Also included is a letter regarding the merger of the Town and York Harbor wherein it suggests that the Town was only allowing MainePERS participation for its full-time employees. This along with the materials you provided today is sufficient documentation to show that the Town has not been inconsistent in its administration of the plan over the years.

Next steps-- Please provide me with a certified copy of a vote taken by the current board that clearly states what the original intent of the Town was with regard to MainePERS eligibility for participation. This should include a statement about eligibility for the Town's school support staff as well. It is acceptable to have a different set of standards for the two groups, we just want our records to be appropriately documented and consistent with the Town's practices.

With very few exceptions, it appears as though the school may have been following the same threshold (30 hours per week) but I can't say for sure. Town and school officials should talk this over prior to submitting the clarifying vote to make sure all parties are on the same page going forward.

Upon review of the school support's payroll, I found two part-time members. If these employees work in a capacity that will fall under the clarified exclusions, the Town can provide an exception to allow them to remain in the plan and make it clear that only employees working X hours per week shall be eligible for MainePERS participation going forward. Current part-time members would be grandpartented and not "kicked-out" of the plan.

The two individuals in question are:
[redacted] bus driver working 20 hours per week.
[redacted] part-time Secretary- hours vary

I hope you find this information helpful and I apologize for the delay in responding to your original inquiry. Let me know if you have any questions as we move forward with this process.

Thanks,

Back to Agenda

Stephanie D. Fecteau
PLD Plan Administrator
Maine Public Employees Retirement System (MainePERS)
PO Box 349
Augusta, ME 04332-0349
T: (207)512-3305
F: (207) 512-3282

Note: Regular e-mail communications are not secure. In order to safeguard sensitive information, we recommend using secure e-mail when sending Social Security Numbers, account numbers and other detailed financial information via e-mail. To send MainePERS a secure e-mail please visit our secure portal at https://web1.zixmail.net/s/login?b=mainepers. You may reach MainePERS at 1-800-451-9800 between 8:00 a.m. and 5:00 p.m., Monday through Friday.

From: Liam Gallagher [mailto:lgallagher@yorkmaine.org]
Sent: Friday, January 29, 2016 11:26 AM
To: Stephanie Fecteau
Cc: Stephen H. Burns; Wendy Anderson
Subject: Town of York: Membership Exclusion
Importance: High

Stephanie,

Per our conversation, I have attached the Non-union Personnel Policy effective July 1, 2003 and the Board of Selectmen meeting minutes approving the document on July 29, 2003 (p. 4 - 03–110(4)).

Per Section II; K. Employee Classifications;

"Full-time Employees

Full-time employees are defined as those employees who have successfully completed a probationary period and are regularly scheduled to work at least 30 hours each week on a year round basis. Full-time employees are eligible for all benefits offered by the Town of York.

Part-time Employees.

Part-time employees are defined as those employees who are scheduled to work less than 30 hours per week on a year round basis. Part-time employees are entitled to partial vacation time. Holidays and sick leave are not granted to this classification of employees.

Contract/Subcontract Employee:

Contract/Subcontract employment is employment under a personal services contract between the Town and an individual. No benefits are offered.

Temporary Employee

Temporary employment is an appointment to work a standard work week or less on a regular basis but for a defined limited period of time, usually not to exceed six (6) months. Extensions of temporary employment may be granted by the Town Manager for up to three (3) months. Temporary employees are paid for hours worked and receive no other benefits.

Seasonal Employment.

Seasonal employment is appointment to a position that generally has a duration coinciding with the one or more of the four (4) seasons and the position terminates with the end of one or more of the applicable season(s). Such employees are paid for hours actually worked and receive no other benefits except those mandated including Workers' Compensation."

Back to Agenda

Per Section V; E. Retirement Program;

"The Town of York will offer a choice of retirement programs to all full time employees. The Town will contribute on behalf of the employee in either the Maine State Retirement System as a Participating Local District or in an ICMA RC (457) Deferred Compensation Program.

Maine State Retirement System.

The employer's contribution as mandated by the Maine State Retirement Program will be paid by the Town for all eligible and participating full time employees.

ICMA R.C. Deferred Compensation Program

All full time employees not participating in the Maine State Retirement Program and not subject to a Collective Bargaining agreement may request that the Town contribute to the ICMA Retirement Corporation, 457 Fund Deferred Compensation Program on their behalf. All full time employees participating in the MSRS Program offered by the Town who wish to participate in the ICMA Program may do so at their own expense through payroll deduction. The Town will contribute 7.5% to the ICMA RC program on behalf of those full time employees not participating in MSRS.

Social Security

All employees are mandated to participate in the Social Security System."

Per our policy, and existing practice, we exclude membership for employees working in permanent positions less than 30 hours per week, seasonal employees or temporary employees.

The request for clarification comes following a MainePERS presentation our Finance Director attended and after reviewing Chapters 401 and 802 of the MainePERS Rules which provides definitions of eligible employees as those working 15 or more hours per week, 720 hours in a 12 month period or seasonal employees with employment in excess of 5 months. Based on our conversation, it would appear that the Town's existing policy and practice would supersede the defined membership guidelines however it was recommended we reaffirm our policy with regard to membership exclusions by executing a document reflecting this practice signed by the governing body of the municipality (Board of Selectmen).

If you could, please confirm the above or clarify and correct where necessary. Thank you, Stephanie.

lg

Liam Gallagher, PHR, SHRM-CP
Director of Human Resources
Town of York
186 York Street, York, ME 03909
p: (207) 363-1000 ext. 232
f: (207) 363-1019
e: lgallagher@yorkmaine.org
I: www.yorkmaine.org

CONFIDENTIALITY: The information contained in this electronic mail message and any electronic files attached to it may be confidential information, and may also be the subject of legal professional privilege and/or public interest immunity. If you are not the intended recipient you are required to delete it. Any use, disclosure

Back to Agenda

x

SELECTMEN
NELSON C. HUTCHINS, CHAIRMAN
HAVEN H. WINN
REGINALD T. FROST

INCORPORATED · AGAMENTICUS, 1641 · GORGEANA, 1642 · YORK, 1652

Town of York

MAINE

TOWN CLERK AND TAX COLLECTOR
NORRIS A. TALPEY
TREASURER
GILMAN L. MOULTON

May 6, 1948

State of Maine

Employees' Retirement System

Augusta, Maine.

Dear Sir:

The following is a copy of the vote passed in the Special Town Meeting of April 24, 1948:

Article VI. Upon a motion duly seconded it was voted that the Town adopt the retirement plan of the Maine State Employees' Retirement System for the benefit of its permanent employees and authorize the Selectmen to issue notes not exceeding $737 in value to cover the intial expense of such plan.

"Plan A"

Very truly your's

Norris A. Talpey

Town Clerk

I 140
25
4640

Back to Agenda

Board of Selectmen
LEON H. BLAISDELL, Jr., Chairman
GEORGE S. HUTCHINS, Jr.
L. RICHARD ZACHARIAS

Administrative Assistant
EDWIN E. KIMBALL

Town of York
Maine 03909

December 29, 1975

Maine State Retirement System
State Office Building
Augusta, Maine 04333

ATT'N: Participating District Representative
RE: Leonard Wieland

Dear Mrs. Grant:

In answer to your letter of December 24, 1975, inquiring if there are additional employees from the York Harbor merger eligible to join the State Retirement System, be advised that Mr. Wieland was the only full time York Harbor municipal employee.

Suggests only F.T. employees were eligible

As to Mr. Wieland's salary based on the calendar year, the following figures should be accepted.

1 April 1972	through 31 December 1972	$5,850
1 Jan. 1973	through 31 December 1973	$8,385
1 Jan. 1974	through 31 December 1974	$8,970
1 Jan. 1975	through 30 September 1975	$7,371

Sincerely,

Edwin E. Kimball
Administrative Assistant

EEK/jpp

Back to Agenda

REQUEST FOR ACTION BY BOARD OF SELECTMEN

DATE SUBMITTED: February 17, 2016	☒ ACTION
DATE ACTION REQUESTED: February 29, 2016	☐ DISCUSSION ONLY
SUBJECT: Request for Contingency	

DISCUSSION OF OPTIONS AVAILABLE TO THE BOARD: The Town owns a cable that crosses York Street in the vicinity of the intersection with Organug Road, and it is used to hang the banners across the road. On November 13, 2015, this cable dropped, banner and all, and damaged a passing vehicle, essentially knocking off an external mirror. Our insurance provided refused to pay a claim on this because the municipality is exempt from liability, but it seems to me this is not the morally correct answer. I directed staff to have the person get their car repaired and that the Town would pay the bill for that repair. That repair has been completed and the total cost of that repair is $330.49. I am requesting this amount be paid from the Selectmen's contingency budget.

I would also appreciate any direction the Board would be willing to offer about the desirability of having the banner cables on York Street and Main Street. I've asked DPW to include their regular inspection and maintenance in their program of regular work, but with very few people using the location on Main Street is it worth keeping?

RECOMMENDATION: I recommend the Town pay this bill from Selectmen's contingency.

PROPOSED MOTION: I move to pay for the vehicle repair necessitated by the failure of the banner cable on York Street, in the amount of $330.49

FISCAL IMPACT: $330.49

DEPARTMENT LINE ITEM ACCOUNT: Selectmen's Contingency Account

BALANCE IN LINE ITEM IF APPROVED: $39,669.51

Prepared by Stephen H. Burns, Town Manager: _____

Back to Agenda

S & J COLLISION CENTER

336 US Route One
York, ME 03909

INVOICE

Date	Invoice #
2/4/2016	12777
TERMS	

Bill To
[redacted] York, ME 03909

REPAIR ORDER #
18238

VIN Number	Vehicle
JTLZE4FE8CJ030031	2012 Scion XB

Item	Description	Amount
Non Taxable Parts		296.69
Sheet Metal Labor		28.80
Non Taxable Haz Waste		5.00

Thank you for doing business with
S & J Collision Center.

Phone # 207-363-7961

Sales Tax (5.5%)	$0.00
Total	$330.49
Payments/Credits	$0.00
Balance Due	$330.49

Back to Agenda

S&J COLLISION CENTER

336 US Route 1, York, ME 03909
Phone: (207) 363-7961
FAX: (207) 363-6076

Workfile ID: 1d3256a0
Federal ID: 22-3870657

Final Bill

RO Number: 18238

Customer:
[redacted]
YORK, ME 03909
[redacted]

Insurance:
Town of York

Adjuster:
Phone:
Claim:
Loss Date:
Deductible:

Estimator: Adam Leeman
Create Date: 1/5/2016

Year:	2012	Style:	4D WGN	VIN:	JTLZE4FE8CJ030031	Mileage In:	
Make:	SCIO	Color:	BROWN			Mileage Out:	
Model:	XB	License:	[redacted]	Job Number:		Vehicle Out:	

Line	Ver	Operation	Description	Qty	Extended Price $	Part Type	Labor	Type	Paint
1	E01		**FRONT DOOR**						
2	E01	Remove/Replace	LT Mirror assy	1	244.51	OEM	0.6	Body	
3	E01	Remove/Replace	LT Mirror cover army rock	1	52.18	OEM	0.0	Body	
4	E01		Hazardous waste removal	1	5.00	Other			

Estimate Totals	Discount $	Markup $	Rate $	Total Hours	Total $
Parts					301.69
Labor, Body			48.00	0.6	28.80
Subtotal					**330.49**
Sales Tax					0.00
Grand Total					**330.49**
Net Total					**330.49**

Estimate Version	Total $
Original	330.49

Insurance Total $:	330.49
Received from Insurance $:	0.00
Balance due from Insurance $:	330.49
Customer Total $:	0.00
Received from Customer $:	0.00
Balance due from Customer $:	0.00

T = Taxable Item, RPD = Related Prior Damage, AA = Appearance Allowance, UPD = Unrelated Prior Damage, PDR = Paintless Dent Repair, A/M = Aftermarket, Rechr = Rechromed, Reman = Remanufactured, OEM = New Original Equipment Manufacturer, Recor = Re-cored, RECOND = Reconditioned, LKQ = Like Kind Quality or Used, Diag = Diagnostic, Elec = Electrical, Mech = Mechanical, Ref = Refinish, Struc = Structural

Back to Agenda

REQUEST FOR ACTION BY BOARD OF SELECTMEN

DATE SUBMITTED: February 16, 2016	☒ ACTION
DATE ACTION REQUESTED: February 29, 2016	☐ DISCUSSION ONLY
SUBJECT: Property Redemption – Tax Map 0090-0084-N; 3 Bog Road	

DISCUSSION OF OPTIONS AVAILABLE TO THE BOARD:

1. Approve the Property Redemption Request for the total taxes, interest and costs due
2. Deny the Property Redemption Request and keep the property under Town ownership

RECOMMENDATION: Approve the Property Redemption Request from Kenneth and Charon Churchill for 3 Bog Road.

PROPOSED MOTION: I moved to approve the property redemption of Tax Map 0090-0084-N, located at 3 Bog Road, as requested, subject to the condition that all taxes, interest and administrative costs are paid in full by no later than April 8, 2016 with cash or certified bank check.

FISCAL IMPACT:

DEPARTMENT LINE ITEM ACCOUNT:

BALANCE IN LINE ITEM IF APPROVED:

PREPARED BY: _____ REVIEWED BY: _____

Melissa M. Avery, Assistant to the Town Manager

Back to Agenda

TO: Board of Selectmen
FROM: Melissa M. Avery, Assistant to the Town Manager
DATE: February 16, 2016
RE: Tax Foreclosure Redemption: Map 0090 Lot 0084-N; 3 Bog Road

Kenneth and Charon Churchill, former property owner of property identified as Tax Map 0090, Lot 0084-N, located at 3 Bog Road in York, Maine, requests to redeem this property for which the Town has foreclosed after the maturing of tax lien for Fiscal Year 2014.

We are recommending to the Selectmen, that Kenneth and Charon Churchill be allowed to redeem this property providing the following condition(s) are met:

Condition #1 – Kenneth and Charon Churchill shall pay in full, to the Town of York, all past year(s) and current years taxes, interest, administrative and lien costs, which total **$7,229.41** by no later than **April 8, 2016**.

FY2014 TAXES AND INTEREST	$2,328.22
FY2015 TAXES AND INTEREST	$2,238.00
FY2016 TAXES AND INTEREST	$2,463.19
ADMINISTRATIVE/LIEN COSTS	$ 200.00
	$7,229.41

Parcel Information

Map-Lot	Size of Lot	Assessed Value	Party Requesting Redemption
0090-0084-N	.87 Acres	$16,300	Kenneth and Charon Churchill

Back to Agenda

Summary | Detail | Notes | Payment Plan

Access

- Tax Map # 0090 0084 N
- Linked to Tax Map # 0090 0084 N
- Parcels Linked to Tax Map # 0090 0084 N
- CHURCHILL CHARON L
- Linked to CHURCHILL CHARON L

Filters

Year

Sub System

- Active A/R
- Hide zero balance

Late Charges

As of Date 4/8/2016

- Display
- Keep Setting

Daily Interest Amount $1.24

Year id	Sub System	Bill Number	Billed	Interest	Fee	Paid	Balance Due	Late Charges	Total Due	1st Due	2nd Due	Up
2016	Real Property Tax	RE1689	$2,403.50				$2,403.50	$59.69	$2,463.19	$1,201.75	$1,201.75	
2015	Tax Title	RE1675	$2,136.15				$2,136.15	$101.85	$2,238.00	$2,136.15		
2014	Tax Title	RE1663	$2,086.95		$9.74		$2,096.69	$231.53	$2,328.22	$2,096.69		
2013	Tax Title	RE1646	$2,261.21	$213.00	$9.48	$2,483.69	$0.00	$0.00	$0.00	$0.00		
2012	Tax Title	RE1657	$2,186.60	$207.26	$9.11	$2,402.97	$0.00	$0.00	$0.00	$0.00		
2011	Tax Title	RE1664	$1,890.69	$184.38	$8.75	$2,083.82	$0.00	$0.00	$0.00	$0.00		
2010	Tax Title	TT128598	$1,468.04	$301.25	$8.59	$1,777.88	$0.00	$0.00	$0.00	$0.00		
2009	Tax Title	TT117698	$1,227.44	$251.42		$1,478.86	$0.00	$0.00	$0.00	$0.00		
			$19,511.94	$2,023.43	$53.88	$14,952.91	$6,636.34	$393.07	$7,029.41	$5,434.59	$1,201.75	

Refresh | Search

Back to Agenda

Jan. 25, 2016

Board of selectmen,

on Jan 22nd I had gone to the town hall to drop off an application to missy and pay our property tax at the same time. unfortunately while waiting in line to pay the taxes, I had a migraine and had to go back home. I came back monday morning to speak with wendy on what to do. We have been through a lot financially with tuitions, the new project, and life. It would have helped paying the $2,300.00 with everything coming at once. What ever you can arrange for our situation would be greatly apriciated.

Thank you,

Kenny & Charon Churchill

3 Bog Road (0090-0084-N)

Back to Agenda

REQUEST FOR ACTION BY BOARD OF SELECTMEN

DATE SUBMITTED: February 26, 2016	☒ ACTION
DATE ACTION REQUESTED: February 29, 2016	☐ DISCUSSION ONLY
SUBJECT: Replacement of the Circuit Breaker Ordinance	

DISCUSSION OF OPTIONS AVAILABLE TO THE BOARD: The State's Circuit Breaker Program was a property tax relief program for lower income Mainers. It provided property tax relief from the State, and the Town had a local program which supplemented the State's tax relief. The State Program was terminated a few years ago, and though the Town's Ordinance (copy attached) remains on the books, it can't be administered because there is no longer a State program in place. I requested the Board repeal the Town's Ordinance on March 24, 2014, but the Board declined in hopes of re-establishing the program at some point in the future.

The State has now replaced the program in the form of an income tax credit. It is now possible for the Town to again help lower income folks by providing property tax relief, though it is a bit more complicated now. The program would be based on people receiving the tax credit on their income taxes. This is confidential information, and it would be appropriate to ask the York Community Service Association (YCSA), which currently administers our General Assistance program, to add this to their responsibilities. Anyone who demonstrates they have received the State tax credit could then be offered a local property tax credit. I spoke with Michelle Surdoval, YCSA Executive Director, and she is interested in pursuing this with the Town.

I have asked Dylan Smith to draft a replacement for our old Circuit Breaker Ordinance (copy attached). If the Board is so inclined, this can be refined and posted for two public hearings in time for a May vote.

If we pursue this Ordinance we also need to seek a budget appropriation to make the system work. The Town last funded Circuit Breaker in FY14 in the amount of $50,000. A request to the Budget Committee should be made immediately because there is still time in their process to add this request. The amount requested is up to the Board. We should also be increasing the amount paid to YCSA to cover the cost of administration.

Back to Agenda

RECOMMENDATION: I recommend we refine the draft and post for an initial public hearing on March 14th. Further, I recommend we find out the cost to administer this program and request of the Budget Committee money to pay for property tax relief and to administer the program.

PROPOSED MOTION: I move to direct the Town Manager to refine and post the proposed property tax relief ordinance for a public hearing on March 14th and to forward to the Budget Committee requests for funds to pay for this program and its administration.

Prepared by Stephen H. Burns, Town Manager: _____

Back to Agenda

Property Tax Relief for Low Income
Circuit Breaker Program Ordinance
of the Town of York
Adopted May 22, 2004

1. Purpose

The purpose of this Ordinance is to provide relief to those taxpayers and renters resident in the Town of York who are of low or modest income and whose property tax costs constitute a significant portion of their total income.

2. Program Description

Under this program, the Town of York will provide supplemental benefit to individuals who qualify as York residents and beneficiaries of the Maine Residents Property Tax Program established by Chapter 907 of Title 36, M.R.S.A. (the "State Program"). York residents who qualify for and receive payment under that program may present proof of such payment by the State of Maine to the Town Clerk or designee and shall automatically qualify for a supplemental benefit from the Town of York. The amount of the supplemental benefit shall be a percentage of the State payment, subject to any pro-ration requirements as described in Section 6 of this ordinance.

3. Qualified Persons

Any York resident who qualifies under the State Program and pays property taxes to the Town of York or rent for the rental of property in the Town of York shall be eligible for the benefit described herein, provided, however, that no homeowner shall be eligible for such benefit on a home assessed at a value higher than the average assessed value of all homes sold in the Town of York during the prior year. An owner of multiple York properties shall not be eligible if the aggregate value of those properties exceeds the average assessed value of a home sold in York during the previous year, ending March 31.

4. Eligible Amounts

York taxpayers and renters who are paid by the State under the provisions of 36 MRSA Section 6207 (regular program) shall be eligible for a benefit of up to 50% of the benefit calculated under the State Program; provided, however, that the benefit to be received by any applicant shall not exceed the sum of $500.00.

York taxpayers and renters who are paid by the State under the provisions of 36 MRSA Section 6206 (Special Elderly Household Program), shall be eligible for a benefit of up to 200% of the benefit calculated under the State Program.

Back to Agenda

Notwithstanding these eligibility standards, A) no person shall receive a benefit hereunder for taxes or rent which, when added to the benefit from the State under the State Program, exceeds 100% of the total property tax paid or rent paid on the subject eligible property.

5. Application and Initial Benefit Payment

Between September 1st and February 28th annually, York residents may apply to the Town Clerk for a benefit hereunder on forms provided by the Town Clerk. Each form must be accompanied by satisfactory evidence of eligibility and benefit payment by the State of Maine under the State Program for the current period, including a statement of the amount of the State Program benefit and the basis and/or type of such benefit. The Town Clerk shall review and determine if the application is complete and accurate and if the applicant is eligible for a benefit hereunder.

If the Town Clerk determines that the applicant is qualified for a benefit hereunder, the Town Clerk shall then determine the total benefit amount based on the formula set forth in Section 4 of this ordinance, and the Town Clerk shall then within 20 days pay the applicant 50% of the total benefit amount as their initial benefit payment.

6. Final Benefit Payments

On or about February 28th, annually, the Town Clerk shall determine the total amount of benefits due to all eligible York applicants as of that date. After deducting the total of the initial benefit payments then due or paid, the Town Clerk will divide the total of remaining benefit amounts by the total remaining funds provided for in the current year budget account established for this program.

If the total of remaining benefit amounts is less than or equal to the funds available in such budgetary account, then each eligible applicant shall be paid their full remaining benefit amount as their final benefit payment.

If the total of remaining benefit amounts is greater than the funds remaining in such budgetary account, then these remaining funds shall be allocated among all then qualified applicants on a pro-rata basis, and then paid to those applicants as their final benefit payment.

Applications received after February 28th shall be paid only if funds remain after distribution of all benefits for applications received prior to February 28th. Applications received after February 28th shall be: A) approved and paid on a first-come, first serve basis until the budgetary account is exhausted, and B) shall be paid at 65% of the total benefit eligibility only.

7. Failure to Appropriate Funds

Failure of the taxpayers of York to appropriate funds to pay for this program shall constitute a suspension of the program for that year.

T: data files York. Town of%2004 General tax relief ordinance.doc

Amended May 20, 2006

Back to Agenda

Proposed Amendment

to be considered at a

May 2016 General Referendum

<u>Amendment</u>

1. Property Tax Relief for Low Income Circuit Breaker Program Ordinance of the Town of York

Back to Agenda

Amendment #1

Property Tax Relief for Low Income Circuit Breaker Program Ordinance of the Town of York

Ballot Language: The following language would appear on the ballot:

Article X
The Town hereby ordains amendment of the Property Tax Relief for Low Income Circuit Breaker Program Ordinance of the Town of York.

Statement of Fact: The purpose of this amendment is to resume providing relief to York resident taxpayers and renters who earn low to modest incomes and to include changes enacted in State law, which repealed the "Residents Property Tax Program" (formerly Chapter 907 of Title 36, M.R.S.A) and replaced it with the "Maine Property Tax Fairness Credit" (Chapter 822 section 5219-II of Title 36, M.R.S.A).

Amendment: Repeal and Add language to the Property Tax Relief for Low Income Circuit Breaker Program Ordinance of the Town of York with the following (see Attachment):

Recommended by the Planning Board:
Recommended by the Board of Selectmen:

Back to Agenda

Property Tax *Fairness Credit*
~~Relief for Low-Income Circuit~~
~~Breaker~~ Program Ordinance of the
Town of York
Adopted May 22, 2004

1. Purpose

The purpose of this Ordinance is to provide relief to ~~those~~ *York resident* taxpayers and renters ~~resident in the Town of York and who are of~~ *who earn* low ~~or~~ *to* modest income. ~~and whose property tax costs constitute a significant portion of their total income~~.

2. Program Description

Under this program, the Town of York will provide a supplemental benefit to individuals who qualify as York residents and beneficiaries of the Maine *Property Tax Fairness Credit* ~~Residents Property Tax~~ Program established by Chapter ~~907~~ *822 section 5219-II* of Title 36, M.R.S.A. (the "State Program"). York residents who qualify for and receive payment under that program may present proof of such payment by the State of Maine to the ~~Town Clerk~~ *Town of York's General Assistance Coordinator or designee* and shall automatically qualify for a supplemental benefit from the Town of York. The amount of the supplemental benefit shall be a percentage of the State payment, subject to any pro-ration requirements as described in Section 6 of this ordinance.

3. Qualified Persons

Any York resident who qualifies under the State Program and pays property taxes to the Town of York or rent for the rental of property in the Town of York shall be eligible for the benefit described herein. ~~provided, however, that no homeowner shall be eligible for such benefit on a home assessed at a value higher than the average assessed value of all homes sold in the Town of York during the prior year~~. *However*, an owner of multiple York properties shall not be eligible. ~~if the aggregate value of those properties exceeds the average assessed value of a home sold in York during the previous year, ending March 31.~~(Discussion- If someone has multiple properties, yet qualifies due to the income levels as specified in the law, it seems potentially unfair or may not meet the intent of the program whereby a refund could be obtained. Perhaps should leave a section about owning multiple properties? A person could sell one in order to supplement their income.)

4. Eligible Amounts

York ~~taxpayers and renters~~ *residents* who are paid by the State under the provisions of 36 MRSA Section 6207 (regular program) shall be eligible for a benefit of up to 50% of the benefit calculated under the State Program; provided, however, that the benefit to be received by any applicant shall not exceed the sum of $500.00.

York ~~taxpayers and renters~~ *residents* who are paid by the State under the provisions of 36 MRSA Section 6206 (Special Elderly Household Program), shall be eligible for a benefit of up to 200% of the benefit calculated under the State Program.

~~Notwithstanding these eligibility standards, A) no person shall receive a benefit hereunder for taxes or rent which, when added to the benefit from the State under the State Program, exceeds~~

Back to Agenda

~~100% of the total property tax paid or rent paid on the subject eligible property.~~

York residents who qualify for a refund under the provisions of 36 M.R.S.A Section 5219-II (State Program) shall be eligible for a benefit of up to 50% of the benefit calculated under the State Program. (Discussion: Is 50% appropriate? Currently, the law contains a maximum benefit of $600 ($900 if you are 65 years of age or older) if you meet the eligible requirements as prescribed in the law (see Property Tax Fairness Credit Tax form or section 5219-II).

5. Application and Initial Benefit Payment

~~Between September 1st and February 28th annually,~~ York residents may apply to the *Town of York's General Assistance Coordinator or designee* ~~Town Clerk~~ for a benefit hereunder on forms provided by the ~~Town Clerk~~ *Town of York's General Assistance Coordinator or designee*. Each form must be accompanied by satisfactory evidence of eligibility and benefit payment by the State of Maine under the State Program for the current period, including a statement of the amount of the State Program benefit and the basis and/or type of such benefit. The ~~Town Clerk~~ *Town of York's General Assistance Coordinator or designee* shall review and determine if the application is complete and accurate and if the applicant is eligible for a benefit hereunder.

If the ~~Town Clerk~~ *Town of York's General Assistance Coordinator or designee* determines that the applicant is qualified for a benefit hereunder, the ~~Town Clerk~~ *Town of York's General Assistance Coordinator or designee* shall then determine the total benefit amount based on the formula set forth in Section 4 of this ordinance, and the ~~Town Clerk~~ *Town of York's General Assistance Coordinator or designee* shall then within 20 days pay the applicant 50% of the total benefit amount as their initial benefit payment.

6. Final Benefit Payments

~~On or about February 28th annually,~~ The ~~Town Clerk~~ *Town of York's General Assistance Coordinator or designee* shall determine the total amount of benefits due to all eligible York applicants ~~as of that date~~. After deducting the total of the initial benefit payments then due or paid, the ~~Town Clerk~~ *Town of York's General Assistance Coordinator or designee* will divide the total of remaining benefit amounts by the total remaining funds provided for in the current year budget account established for this program.

If the total of remaining benefit amounts is less than or equal to the funds available in such budgetary account, then each eligible applicant shall be paid their full remaining benefit amount as their final benefit payment.

If the total of remaining benefit amounts is greater than the funds remaining in such budgetary account, then these remaining funds shall be allocated among all then qualified applicants on a pro-rata basis, and then paid to those applicants as their final benefit payment.

Applications received ~~after February 28th~~ *during the calendar year* shall be paid only if funds remain after distribution of all benefits for applications received ~~prior to February 28th~~ *during the calendar year*. Applications received ~~after February 28th~~ shall be: A) approved and paid on a first-come, first serve basis until the budgetary account is exhausted. ~~and B) shall be paid at 65% of the total benefit eligibility only~~.

7. Failure to Appropriate Funds

Back to Agenda

Failure of the taxpayers of York to appropriate funds to pay for this program shall constitute a suspension of the program for that year.

Amended May 20, 2006
Amended May 21, 2016

NOTE: The Word file was re-created on 10/25/2013 by the Community Development Department by converting the PDF file to Word, then correcting the conversion errors.

Back to Agenda

From Lewiston

Note: For Informational Purposes only.

Maine Residents Property Tax and Rent Refund "Circuitbreaker" Program

The Maine Residents Property Tax and Rent Refund "Circuitbreaker" Program has been repealed as part of the enacted state budget for claims beginning on or after August 1, 2013. The Circuitbreaker Program has been replaced by a refundable Property Tax Fairness Credit that can be claimed on the Maine Individual Income Tax Form.

The new credit will be available beginning in **January, 2014** on the 2013 Maine Individual Income Tax Form 1040ME. A worksheet will be included with Form 1040ME to calculate the amount of the credit.

Who will be eligible for the new Property Tax Fairness Credit? Homeowners or renters will be eligible who meet all of the following requirements:

1. Were Maine residents during any part of the tax year;
2. Owned or rented a home in Maine during any part of the tax year and lived in that home during the year;
3. Had Maine adjusted gross income of not more than $40,000; and
4. Paid property tax on a home in Maine during the tax year that was more than 10% of Maine adjusted gross income or paid rent to live in a home or apartment in Maine during the tax year that was more than 40% of Maine adjusted gross income.

How much is the refundable credit? Qualified Maine residents can get as much as $300 ($400 if 70 years of age or older).

How does someone apply for the refundable credit? To claim the credit, an applicant must file the 2013 Form 1040ME and the Property Tax Fairness Credit Worksheet, which will be available in January, 2014.

Can applicants receive assistance in applying for the credit? Yes, Maine Revenue Services will assist applicants to complete Form 1040ME and the Property Tax Fairness Credit Worksheet. For help, call 207-626-8475 weekdays 8:00am – 5:00pm or visit Maine Revenue Services at 51 Commerce Drive, Augusta, ME 04330, weekdays 8:00am – 4:30pm. Closed on State recognized holidays.

Where can applicants get Form 1040ME after January 1, 2014? Forms can be downloaded from the Maine Revenue Services web site at http://www.maine.gov/revenue/forms or by calling 207-624-7894 to request that a form be mailed. Those who filed a Circuitbreaker application on or after August 1, 2012, will receive by mail a Form 1040ME booklet at the end of this year, even if they did not file Form 1040ME last year.

~~E-mail Questions or Call (207) 626-8475 for Additional Information~~

Back to Agenda

Maine Revised Statutes

Title 36: TAXATION

Part 8: INCOME TAXES

Chapter 822: TAX CREDITS

§5219-II. Property tax fairness credit

For tax years beginning on or after January 1, 2013 and before January 1, 2014, a Maine resident individual is allowed a property tax fairness credit as computed under this section against the taxes imposed under this Part. [2013, c. 551, §2 (AMD).]

1. Definitions. As used in this section, unless the context otherwise indicates, the following terms have the following meanings.

A. "Benefit base" means property taxes paid by the resident individual during the tax year on the individual's homestead in this State or rent constituting property taxes paid by the resident individual during the tax year on a homestead in the State. [2013, c. 368, Pt. L, §1 (NEW).]

B. "Dwelling" means an individual house or apartment, duplex unit, cooperative unit, condominium unit, mobile home or mobile home pad. [2013, c. 368, Pt. L, §1 (NEW).]

C. "Homestead" means the dwelling owned or rented by the taxpayer or held in a revocable living trust for the benefit of the taxpayer and occupied by the taxpayer and the taxpayer's dependents as a home, and may consist of a part of a multidwelling or multipurpose building and a part of the land, up to 10 acres, upon which it is built. "Owned" includes a vendee in possession under a land contract, one or more joint tenants or tenants in common and possession under a legally binding agreement that allows the owner of the dwelling to transfer the property but continue to occupy the dwelling as a home until some future event stated in the agreement. [2013, c. 368, Pt. L, §1 (NEW).]

D. "Rent constituting property taxes" means 25% of the gross rent actually paid in cash or its equivalent during the tax year solely for the right of occupancy of a homestead in the State. "Rent constituting property taxes" does not include rent subsidized by government programs that limit housing costs to a percentage of household income except that this exclusion does not apply to persons receiving social security disability or supplemental security income disability benefits. For the purposes

Back to Agenda

of this paragraph, "gross rent" means rent paid at arm's length solely for the right of occupancy of a homestead, exclusive of charges for any utilities, services, furniture, furnishings or personal property appliances furnished by the landlord as part of the rental agreement, whether or not expressly set out in the rental agreement. If the landlord and tenant have not dealt with each other at arm's length, and the assessor is satisfied that the gross rent charged was excessive, the assessor may adjust the gross rent to a reasonable amount for purposes of this section. [2013, c. 368, Pt. L, §1 (NEW).]

[2013, c. 368, Pt. L, §1 (NEW) .]

2. Credit. A resident individual filing a single or married separate return or resident spouses filing joint returns with Maine adjusted gross income up to $40,000 are allowed a credit against the taxes imposed under this Part in an amount equal to 40% of the amount by which the benefit base exceeds 10% of the resident individual's or the resident spouses' total Maine adjusted gross income as defined under section 5102, subsection 1-C, paragraph A that is greater than zero. The credit may not exceed $300 for resident individuals under 70 years of age as of the last day of the taxable year and $400 for resident individuals 70 years of age and older as of the last day of the taxable year. In the case of married individuals filing a joint return, only one spouse is required to be 70 years of age and older to qualify for the $400 credit limitation. In the case of resident married individuals filing separate returns, each of whom claim the credit on the same homestead, the credit for each spouse may not exceed $150 if, for the taxable year, neither spouse was a resident individual 70 years of age or older or $200 if, for the taxable year, at least one spouse was 70 years of age or older.

[2013, c. 368, Pt. L, §1 (NEW) .]

3. Refundability of credit. The tax credit is refundable after the application of nonrefundable credits.

§5219-II. Maine capital investment credit for 2013 (As enacted by PL 2013, c. 368, Pt. TT, §18 is REALLOCATED TO TITLE 36, SECTION 5219-JJ)

[2013, c. 368, Pt. L, §1 (NEW) .]

SECTION HISTORY
RR 2013, c. 1, §54 (RAL). 2013, c. 368, Pt. L, §1 (NEW). 2013, c. 368, Pt. TT, §18 (NEW). 2013, c. 551, §2 (AMD).

The Revisor's Office cannot provide legal advice or interpretation of Maine law to the public.
If you need legal advice, please consult a qualified attorney.

Office of the Revisor of Statutes (mailto:webmaster_ros@legislature.maine.gov) • 7 State House Station • State House Room 108 • Augusta, Maine 04333-0007

Page composed on 01/05/2016 01:03:45.

Back to Agenda

Maine Revised Statutes

Title 36: TAXATION

Part 9: TAXPAYER BENEFIT PROGRAMS

Chapter 907: MAINE RESIDENTS PROPERTY TAX PROGRAM HEADING: PL 1989, C. 534, PT. A, §1 (RPR)

§6206. Income limitations for elderly households

A claimant representing an elderly household shall qualify for the following benefits subject to the following income limitations. [1987, c. 516, §§3, 6 (NEW).]

1. Single-member elderly households. For single-member elderly households, the benefit shall be calculated as follows:

If household income equals:	The benefit equals:
$ 0 to $6,800	100% of the benefit base up to a maximum of $400
$6,801 to $7,000	75% of the benefit base up to a maximum of $300
$7,001 to $7,200	50% of the benefit base up to a maximum of $200
$7,201 to $7,400	25% of the benefit base up to a maximum of $100

[1987, c. 516, §§3, 6 (NEW) .]

2. Elderly households with 2 or more members. For elderly households with 2 or more members, the benefit shall be calculated as follows:

If household income equals:	The benefit equals:
$ 0 to $8,100	100% of the benefit base up to a maximum of $400
$8,101 to $8,500	75% of the benefit base up to a maximum of $300
$8,501 to $8,800	50% of the benefit base up to a maximum of $200
$8,801 to $9,200	25% of the benefit base up to a maximum of $100

[1987, c. 516, §§3, 6 (NEW) .]

Back to Agenda

3. Minimum benefit. No claim of less than $5 may be granted.

[1987, c. 516, §§3, 6 (NEW) .]

SECTION HISTORY
1987, c. 516, §§3,6 (NEW).

The Revisor's Office cannot provide legal advice or interpretation of Maine law to the public. If you need legal advice, please consult a qualified attorney.

Office of the Revisor of Statutes (mailto:webmaster_ros@legislature.maine.gov) • 7 State House Station • State House Room 108 • Augusta, Maine 04333-0007

Page composed on 01/05/2016 01:03:45.

Back to Agenda

Maine Revised Statutes

Title 36: TAXATION

Part 9: TAXPAYER BENEFIT PROGRAMS

Chapter 907: MAINE RESIDENTS PROPERTY TAX PROGRAM HEADING: PL 1989, C. 534, PT. A, §1 (RPR)

§6207. Income limitations for nonelderly households

A claimant representing a nonelderly household qualifies for the following benefits subject to the following income limitations. [1997, c. 557, Pt. A, §3 (AMD); 1997, c. 557, Pt. G, §1 (AFF).]

1. Benefit calculation. For claimants representing a nonelderly household, the benefit is calculated as follows:

A. [1989, c. 534, Pt. A, §6 (NEW); 1989, c. 878, Pt. B, §36 (RP).]

A-1. Fifty percent of that portion of the benefit base that exceeds 4% but does not exceed 8% of income plus 100% of that portion of the benefit base that exceeds 8% of income to a maximum payment of $2,000; and [2009, c. 213, Pt. XXX, §1 (AMD).]

B. For application periods beginning on August 1, 2009, August 1, 2010, August 1, 2011 and August 1, 2012, the benefit is limited to 80% of the amount determined under paragraph A-1. [2011, c. 380, Pt. P, §1 (AMD).]

[2011, c. 380, Pt. P, §1 (AMD) .]

2. Income eligibility.

[2005, c. 2, Pt. E, §§7, 8 (AFF); 2005, c. 2, Pt. E, §5 (RP) .]

2-A. Income eligibility. For application periods beginning on or after August 1, 2008, a single-member household with a household income in excess of $60,000 and a household with 2 or more members with a household income in excess of $80,000 are not eligible for a benefit.

[2007, c. 700, Pt. A, §2 (NEW) .]

3. Subsidized housing; special needs payment. A claim may not be granted under this section to claimants:

Back to Agenda

A. Whose housing costs for the year for which relief is requested were subsidized by government programs that limit housing costs to a percentage of household income, except that the exclusion provided by this paragraph does not apply to persons receiving social security disability or supplemental security income disability benefits. [1999, c. 494, §1 (AMD).]

B. [1997, c. 557, Pt. A, §3 (RP); 1997, c. 557, Pt. G, §1 (AFF); 1997, c. 683, Pt. B, §24 (RP).]

[1999, c. 494, §1 (AMD) .]

4. Minimum benefit. A claim of less than $10 may not be granted.

[1997, c. 557, Pt. A, §3 (AMD); 1997, c. 557, Pt. G, §1 (AFF) .]

SECTION HISTORY
1987, c. 516, §§3,6 (NEW). 1987, c. 839, §3 (AMD). 1987, c. 876, §§5,10 (AMD). 1989, c. 534, §§A6-8 (AMD). 1989, c. 878, §§B36,37 (AMD). 1991, c. 780, §Q3 (AMD). 1991, c. 780, §Q5 (AFF). 1993, c. 410, §§C6,7 (AMD). 1995, c. 368, §§CCC8,9 (AMD). 1995, c. 368, §CCC11 (AFF). 1995, c. 395, §S4 (AMD). 1995, c. 639, §32 (AMD). 1997, c. 530, §A33 (AMD). 1997, c. 557, §A3 (AMD). 1997, c. 557, §G1 (AFF). 1997, c. 683, §B24 (AMD). 1999, c. 494, §1 (AMD). 2005, c. 2, §§E4,5 (AMD). 2005, c. 2, §§E7,8 (AFF). 2007, c. 700, Pt. A, §2 (AMD). 2009, c. 213, Pt. XXX, §§1, 2 (AMD). 2011, c. 380, Pt. P, §1 (AMD).

The Revisor's Office cannot provide legal advice or interpretation of Maine law to the public. If you need legal advice, please consult a qualified attorney.

Office of the Revisor of Statutes (mailto:webmaster_ros@legislature.maine.gov) • 7 State House Station • State House Room 108 • Augusta, Maine 04333-0007

Page composed on 01/05/2016 01:03:45.

Back to Agenda

SCHEDULE PTFC
FORM 1040ME
2015
Attachment Sequence No. 3

PROPERTY TAX FAIRNESS CREDIT

For MAINE RESIDENTS and PART-YEAR RESIDENTS ONLY.
Enclose with your Form 1040ME.
See instructions.
For more information, visit www.maine.gov/revenue/forms.

1502205

99

Name(s) as shown on Form 1040ME

Your Social Security Number

Enter your date of birth MM DD YYYY

If married, enter your spouse's date of birth MM DD YYYY

Physical location of property where you lived during 2015 (if different from your mailing address):

TOTAL INCOME - Complete line 1 or line 2 below, but not both. Complete line 1 if you do not file federal Form 1040, 1040A or 1040EZ. Complete line 2 if you do file federal Form 1040, 1040A or 1040EZ. Then go to line 3.

IF YOU DO NOT FILE FEDERAL FORM 1040, 1040A or 1040EZ, ENTER:

1. (a) Social security benefits and railroad retirement benefits (see instructions) ..... 1a. .00
   (b) Interest and dividends (see instructions) ..... 1b. .00
   (c) Pensions, annuities and IRA distributions (see instructions) ..... 1c. .00
   (d) Wages, salaries, tips, etc. (see instructions.) ..... 1d. .00
   (e) Other income (see instructions) ..... 1e. .00

OR, IF YOU DO FILE FEDERAL FORM 1040, 1040A or 1040EZ, ENTER:

2. (a) Federal total income (from federal Form 1040, line 22, Form 1040A, line 15 or Form 1040EZ, line 4). Part-year residents - see instructions. ..... 2a. .00
   (b) Social security benefits not included on line 2a above (federal Form 1040, line 20a minus line 20b or Form 1040A, line 14a minus line 14b) and railroad retirement benefits not included on line 2a above (see instructions) ..... 2b. .00
   (c) Interest not included on line 2a above ..... 2c. .00
   (d) Loss add-backs (see instructions) ..... 2d. .00

3. **Total Income.** Add lines 1a through 1e **OR** lines 2a through 2d above ..... 3. .00
   If the amount on line 3 is more than the amount shown in the table below for your filing status and the number of personal exemptions you claim on Form 1040ME, line 13, stop here. You do not qualify for the property tax fairness credit. Otherwise, go to line 4.

If your Filing Status is: AND	You claim no more than 2 personal exemptions OR	You claim more than 2 personal exemptions
	Your maximum income limitation is:	
Single	$33,333	$33,333
Head of Household, or Married filing Jointly, or Qualifying Widow(er)	$43,333	$53,333
Married filing Separately	$21,667	$26,667

Continue on next page

Back to Agenda

1502206

99

BENEFIT BASE - PROPERTY TAX and/or RENT PAID:

4. Enter the property tax you paid on your home in 2015. (See instructions.) ..... 4. .00
If you paid no property tax in 2015, skip to line 5a.

5. (a) Enter the rent you paid on your home in 2015. (See instructions.) ..... 5a. .00
If you paid no rent in 2015, skip to line 6.

(b) Does the rent entered on line 5a include heat, utilities, furniture or similar items? ..... 5b. Yes No

(c) If line 5b is yes and you know the amount paid for heat, utilities, furniture or similar items, enter that amount on line 5c. If yes, and you do not know the amount paid, multiply line 5a by 15% (.15) and enter the result on line 5c. If line 5b is no, enter "0" on line 5c. ..... 5c. .00

(d) Line 5a minus line 5c ..... 5d. .00

(e) Multiply line 5d by 15% (.15) ..... 5e. .00

(f) Landlord's name and telephone number

6. Add lines 4 and 5e. ..... 6. .00

7. Enter the amount shown in the table below for your filing status and the number of personal exemptions you claim on Form 1040ME: ..... 7. .00

If your Filing Status is: AND	You claim no more than 2 personal exemptions	OR You claim more than 2 personal exemptions
	Your maximum benefit base is:	
Single	$2,000	$2,000
Head of Household, or Married filing Jointly, or Qualifying Widow(er)	$2,600	$3,200
Married filing Separately	$1,300	$1,600

8. Benefit base. Enter the smaller of line 6 or line 7 ..... 8. .00

PROPERTY TAX FAIRNESS CREDIT CALCULATION:

9. Multiply line 3 by 6% (.06) ..... 9. .00

(a) Is the amount on line 8 more than the amount on line 9? ..... 9a. Yes No
If yes, go to line 10 below. If no, stop here, you do not qualify for the Property Tax Fairness Credit.

10. Subtract line 9 from line 8 ..... 10. .00

11. Multiply line 10 by 50% (.50) ..... 11. .00

12. Were you or your spouse (if married filing jointly) at least 65 years of age during the tax year? ..... 12. Yes No

(a) If yes, enter $900. If no, enter $600. ..... 12a. .00
NOTE: If you are married filing a separate return and both you and your spouse claim the property tax fairness credit on the same homestead, enter $450 if yes or $300 if no.

13. Enter line 11 or line 12a, whichever is smaller, here and on **Form 1040ME, line 25d.** ..... 13. .00

Back to Agenda

SCHEDULE PTFC – PROPERTY TAX FAIRNESS CREDIT INSTRUCTIONS

Who is eligible?

You may qualify for a **refundable** Property Tax Fairness Credit up to $600 ($900 if you are 65 years of age or older) if you meet all of the following:

- You were a Maine resident during any part of the tax year;
- You owned or rented a home in Maine during any part of the tax year and lived in that home as your principal residence during the year;
- Your total income during 2015 was not more than the amount shown in the table below for your filing status and the number of personal exemptions you claim:

If your Filing Status is: AND	You claim no more than 2 personal exemptions OR	You claim more than 2 personal exemptions
	Your maximum income limitation is:	
Single	$33,333	$33,333
Head of Household, or Married filing Jointly, or Qualifying Widow(er)	$43,333	$53,333
Married filing Separately	$21,667	$26,667

- You paid property tax on your home (principal residence) in Maine during the tax year that is greater than 6% of your total income or you paid rent on your home (principal residence) in Maine during the tax year that is greater than 40% of your total income. **Note** that the amount of property tax or rent you can include may be limited. See line 7 on Schedule PTFC.

SPECIFIC INSTRUCTIONS

Step 1. Complete Form 1040ME according to the form instructions.

However, if you are filing Form 1040ME only to claim the property tax fairness credit, you have no Maine income modifications on Form 1040ME, Schedule 1 and you do not file a federal income tax return, complete Maine Form 1040ME according to the instructions below:

- fill in your name, address, social security number, telephone number and, if married, your spouse's name and social security number;
- check Box A below your address;
- enter your correct filing status on lines 3-7;
- enter your correct residency status on lines 8-11;
- check the applicable boxes on lines 12a through 12d if either you or your spouse were 65 years or over or blind during 2015;
- enter the number of personal exemptions you can claim on line 13;
- enter 0 on lines 14, 15 and 16;
- complete Schedule PTFC (see Step 2 instructions below); and
- enter the amount from Schedule PTFC, line 13 on Form 1040ME, lines 25d, 25e, 27, 28, 32 and 33b. Any refund will be mailed to you. However, if you want your refund deposited directly into your checking or savings account, also complete lines 33c, 33d and 33e.

Note: Part-year residents must also complete Form 1040ME, Schedule NR and related Worksheet B – Income Allocation Worksheet.

Step 2. Complete Schedule PTFC. Enter your name and social security number as shown on Form 1040ME. Also enter your date of birth and your spouse's date of birth, if married.

Complete either lines 1a through 1e **OR** lines 2a through 2d. **If you do not file federal Form 1040, 1040A or 1040EZ, complete lines 1a through 1e. If you do file a federal Form 1040, 1040A or 1040EZ, enter your income on lines 2a through 2d.**

If you do not file federal Form 1040, 1040A or 1040EZ:

Line 1a. Social security and railroad retirement benefits. Enter all payments received under the federal Social Security Act, including regular social security benefits, social security disability benefits and supplemental security income. Include the gross amount before Medicare is subtracted. This amount can generally be located on federal Form SSA-1099 (see also federal Form 1040, line 20a). Also enter on this line the amount of railroad retirement benefits received. This amount can generally be located on federal Form RRB-1099 or RRB-1099-R.

Line 1b. Interest and dividends. Enter all interest and ordinary dividends you received. These amounts can generally be found on the federal Form 1099 issued by the payer.

Line 1c. Pensions, annuities and IRA distributions. Enter the amount of all pensions, annuities and IRA distributions you received that would be included in federal total income if you filed a federal income tax return. These amounts can generally be found on the federal Form 1099 issued by the payer.

Line 1d. Wages, salaries, tips, etc. Enter the total amount of wages, salaries and other compensation that would be included in federal total income if you filed a federal income tax return. This amount is generally reported in box 1 of the federal Form W-2 or on the federal Form 1099 issued by the payer.

Back to Agenda

Line 1e. Other income. Enter alimony received; business income (but do not enter business losses); capital gains; other gains; any income from rental real estate, royalties, partnerships, S corporations, trusts, etc.; farm income; unemployment compensation; any other income that would be included in federal total income if you filed a federal income tax return. For more information on federal total income, see federal income tax forms and instructions at www.irs.gov.

If you do file federal Form 1040, 1040A or 1040EZ:

Line 2a. Federal Total Income. Enter your federal total income from federal Form 1040, line 22; 1040A, line 15 or 1040EZ, line 4. Part-year residents - enter on line 2a the portion of your federal total income related to that part of the tax year you were a Maine resident plus any Maine-source income while you were a nonresident. To determine this amount, add Form 1040ME, Worksheet B, Column B, line 15 plus Worksheet B, Column E, line 15.

Line 2b. To the extent not already included in federal total income on line 2a, enter all payments received under the federal Social Security Act and the amount of railroad retirement benefits received. See the instructions for line 1a above.

Line 2c. Enter only amounts not already included in federal total income on line 2a.

Line 2d. Loss add-backs. Enter on line 2d the amount of any negative amount (net loss) shown on federal Form 1040, lines 12, 13, 14, 17, 18 and 21. Enter the total of the amounts as a positive number.

Line 3. Total income. If the amount on line 3 is more than the amounts shown in the table, you do not qualify for the property tax fairness credit.

Line 4. Property Tax. If you owned your home in Maine and lived in that home during 2015, enter the amount of property tax paid during 2015 on your house and house lot up to 10 acres. If your house is on land that is more than 10 acres, call your town or city assessor to get the tax on your house and the land up to 10 acres. Part-year residents - enter only the property tax amounts you paid for your home in Maine during the part of the tax year you were a Maine resident. **Note: You may be asked to provide proof of the property tax paid before a refund is issued.**

- Do not use the amount of property tax assessed; enter only the amount of tax actually paid on your home during 2015.
- Do not include amounts paid for interest or special assessments.
- Do not include property taxes on property other than your primary residence.
- Do not claim any property tax paid by others. If the home is jointly owned, **enter only the property tax you paid.** You can claim the tax you paid on your home even if you have transferred ownership to someone else under a legal agreement that allows you to continue to live in the home, but you can claim the tax on the home only for as long as you live in the home.
- Do not include taxes on any part of your home or property used exclusively for business. For example, you owned a two-story building. You lived upstairs and ran a store downstairs. You can claim one-half of the property tax you paid. Do not include property taxes claimed as a business expense on your federal tax return.
- Do not include taxes on any part of your home that serves as a separate dwelling. Include only the taxes paid for the part of the home you occupied as your primary residence. For example, your primary residence is one unit located in a three-unit dwelling. You can claim only one-third of the property tax paid.

Note: If you owned a home that was on rented land or vice-versa, you can include the property tax you paid during 2015 on line 4 and the rent you paid during 2015 on line 5a. For example, you owned a mobile home located in a park. Enter the property tax on your mobile home on line 4 and the lot rent you paid on line 5a.

Line 5. Rent.

Line 5a. Enter the total rent you paid for your home (principal residence) in Maine during 2015. If you moved during the tax year, include the rent you paid during the tax year to live in each home or apartment. Include Workfare payments received from your town used to pay your rent. Part-year residents - enter only rent amounts you paid on your home in Maine during the part of the tax year you were a Maine resident. **Note: You may be asked to provide copies of rent receipts or canceled checks before a refund is issued.**

- Do not include mortgage payments or room and board payments. Mortgage payments and room and board payments are not rent.
- Do not include the rent amount paid by a government program.
- Do not include rent for any part of your home that was rented out to others. For example, you share an apartment with your sister. Each of you are equally responsible for one-half of the rent. Include only the amount of rent you paid to live in the apartment.
- Do not include rent for any part of your home used exclusively for business. For example, you rent a two-story building. You live in a 2nd floor apartment and run a business on the 1st floor. Claim only the portion of rent you paid for the right to live in the 2nd floor apartment.
- Do not include rent claimed as a business expense on your federal return.

Line 5c. If the rent you entered on line 5a includes an amount for heat, utilities, furniture or other similar items and you know the amount paid toward the heat, utilities, furniture or other similar items, enter the amount on line 5c. If your landlord cannot provide the amount you paid for heat, utilities, furniture or other similar items, multiply the amount on line 5a by 15% (.15) and enter the result on line 5c. If the rent entered on line 5a does not include an amount paid for heat, utilities, furniture or other similar items, enter 0 on line 5c.

Line 5d. Subtract line 5c from line 5a. The rent you paid can include only the amount paid for the right to live in your home, excluding amounts paid for heat, utilities, furniture or other similar items.

Back to Agenda

REQUEST FOR ACTION BY BOARD OF SELECTMEN

DATE SUBMITTED: February 26, 2016	☒ ACTION
DATE ACTION REQUESTED: February 29, 2016	☐ DISCUSSION ONLY
SUBJECT: Special Event Permit Applications	

DISCUSSION OF OPTIONS AVAILABLE TO THE BOARD: All appropriate departments have been notified and have given approval. Options available to the Board: 1) Approve/Deny all Special Event Permit Applications listed below in one motion. 2) Approve/Deny Special Event Permit Applications in separate motions

RECOMMENDATION: Approve all Special Event Permit Applications in one motion.

PROPOSED MOTION: I move to approve the following Special Event Permit applications subject to all, if any, conditions given by Department Heads:

a. Coast to Summit 100
b. Walk for Wishes
c. Big A 50K
d. Wedding at Churchill Ranch
e. Spring Ride for the Troops
f. York Little League Opening Day Parade

FISCAL IMPACT: N/A

DEPARTMENT LINE ITEM ACCOUNT: N/A

BALANCE IN LINE ITEM IF APPROVED: N/A

PREPARED BY: _____ REVIEWED BY: _____

Back to Agenda

Town of York, Maine
Special Event Permit Application

This application for a special event permit is hereby presented to the York Town Manager, 186 York Street, York, ME 03909.

Date: 02/11/2016

Name of Event: Coast To Summit 100

Type of Event: Fundraiser / 6 1/2 mile run (see attached)

Organization Name: Coast To Summit 100 Phone #: (603) 918-0062

Organization Address: 61 Darcy Road City York State: ME Zip: 03909

Applicant Name: Tom Cross Phone #: (603) 918-0062

Applicant Address: 61 Darcy Road City: York State: ME Zip: 03909

Contact Name for Day of Event: Tom Cross Contact Phone # (603) 918-0062

Date of Event: 07/16/2016 Day of Week: Saturday

Starting Time: 5:30 AM Ending Time: 6:45 AM

Assembly Area: Harbor Beach

Dispersal Area: Highland Farms Preserve (parking area)

Event Route: Harbor Beach to Fisherman's Walk to Steedman Woods to Mill Dam Road to Lindsay Road to organug Road to Seabury Road to Southside Road to Beech Ridge Road to Scotland Bridge Road to Cider Hill Road (91) to Highland Farms Preserve parking area.

Approximate Number of Persons Attending (If more than 500, Insurance coverage needed)

≤ 25

Describe number of bands, vehicles, signs, floats, or other articles carried or displayed along with method of participation (walking, bicycles, motorcycles etc):

None

Describe how group is organized and supervised to insure order: Each participant is required to know the course, obey all traffic laws and regulations, and provide own support along the course.

Purpose of the Event: Fundraiser with 100% of proceeds to go to charity / non-profit organization.

The above information is true to the best of my knowledge and belief.

Signature of Applicant: Thom B. Cross

Back to Agenda

Town of York, Maine
Special Event Permit Application

This application for a special event permit is hereby presented to the York Town Manager, 186 York Street, York, ME 03909.

Date: 2/5/16

Name of Event: Walk for Wishes

Type of Event: Walk for charity

Organization Name: Make-A-Wish Maine Phone #:

Organization Address: 477 Congress St, Suite M1 City Portland State: ME Zip: 04101

Applicant Name: Lisa Anderson Phone #: 207-363-5641

Applicant Address: 4 Bristol Ln City: York State: ME Zip: 03909

Contact Name for Day of Event: Lisa Anderson Contact Phone # 207-451-0052

Date of Event: 5/19/16 Day of Week: Thursday

Starting Time: 4:30 setup / 6 pm walk start Ending Time: 8 pm

Assembly Area: York Middle School

Dispersal Area: York Middle School field

Event Route: York Middle School → (L) onto Organug Rd → (L) onto Lindsay Rd → (R) into Steadman Woods (optional) → (R) onto Lindsay Rd (after Steadman Woods circuit) → (L) onto Indian Trail → (R) onto Organug Rd → Middle School

Approximate Number of Persons Attending (If more than 500, Insurance coverage needed)
250 – 400

Describe number of bands, vehicles, signs, floats, or other articles carried or displayed along with method of participation (walking, bicycles, motorcycles etc):
banner will be held @ start of walk. Participants will walk or run route. signage & walk route marshalls will be at intersections.

Describe how group is organized and supervised to insure order: walk route marshalls will be at all intersections. All walkers will be "launched" at 6 pm. Marshalls will scan area after event

Purpose of the Event: raise funds to grant wishes

The above information is true to the best of my knowledge and belief.

Signature of Applicant: Lisa Anderson

Back to Agenda

Town of York, Maine
Special Event Permit Application

This application for a special event permit is hereby presented to the York Town Manager, 186 York Street, York, ME 03909.

Date: 2-5-2016

Name of Event: BIGA 50K

Type of Event: TRAIL Running Race

Organization Name: n/A Phone #: n/A

Organization Address: n/A City ____ State: ____ Zip: ____

Applicant Name: RICHARD COLLINS Phone #: 207-363-8882

Applicant Address: 6 OLD Mountain Road City: CAPE NEDDICK State: ME Zip: 03902

Contact Name for Day of Event: Same as App Contact Phone # 603-502-7349

Date of Event: APRIL 30, 2016 Day of Week: SATURDAY

Starting Time: 7:00 AM Ending Time: 5:00 PM

Assembly Area: Top of Mt Agamenticus

Dispersal Area: Same

Event Route: SEE Attached map + trail turn sheet

Approximate Number of Persons Attending (If more than 500, Insurance coverage needed)
70

Describe number of bands, vehicles, signs, floats, or other articles carried or displayed along with method of participation (walking, bicycles, motorcycles etc):
none

Describe how group is organized and supervised to insure order: two race directors 5-10 Volunteers

Purpose of the Event: trail race

The above information is true to the best of my knowledge and belief.

Signature of Applicant: Richard Dlal

Misc: There is a $15 entry fee with all proceeds going to Mt A Conservation
This is the 6th year of the race

Back to Agenda

Town of York, Maine
Special Event Permit Application

This application for a special event permit is hereby presented to the York Town Manager, 186 York Street, York, ME 03909.

Date: Dec 3, 2015

Name of Event: Wedding at Churchill Ranch

Type of Event: Wedding

Organization Name: Jill Cliff Phone #: 978-376-2826

Organization Address: 181 Merrimack St City Methuen State: Ma Zip: 01844

Applicant Name: Kenneth Churchill Phone #: 617-407-6096

Applicant Address: 1 Churchill Ct City: York State ME Zip: 03909

Contact Name for Day of Event: Kenny Churchill Contact Phone # 617-407-6096

Date of Event: Sept 24, 2016 Day of Week: Saturday

Starting Time: 2:00 pm Ending Time: 9:00 pm

Assembly Area: 1 Churchill Ct. Lower left field off of driveway

Dispersal Area: 1 Churchill Ct Lower left and right fields off drive way.

Event Route: 91- Bog Rd. - 1 Churchill Ct

Approximate Number of Persons Attending (If more than 500, Insurance coverage needed)
175

Describe number of bands, vehicles, signs, floats, or other articles carried or displayed along with method of participation (walking, bicycles, motorcycles etc):

Describe how group is organized and supervised to insure order: Workers of Churchill Ranch Weddings will be present.

Purpose of the Event: Marriage

The above information is true to the best of my knowledge and belief.

Signature of Applicant: [signature]

Back to Agenda

Town of York, Maine
Special Event Permit Application

This application for a special event permit is hereby presented to the York Town Manager, 186 York Street, York, ME 03909.

Date: 2/22/16

Name of Event: Spring Ride For The Troops

Type of Event: Fund Raiser To Raise Money For Our Veterans

Organization Name: Patriot Riders of America Maine Chapter One Phone #: 207-651-9328

Organization Address: P.O. Box 1259 City Sanford State: ME Zip: 04073

Applicant Name: Bruce Knight Phone #: 207-651-9328

Applicant Address: 7 Jesse Circle City: Sanford State: ME Zip: 04073

Contact Name for Day of Event: Bruce Knight Contact Phone # 207-651-9328

Date of Event: May 1, 2016 Day of Week: Sunday

Starting Time: 8 AM Ending Time: 11 AM

Assembly Area: York High School

Dispersal Area: York High School

Event Route: See Attachment

Approximate Number of Persons Attending (If more than 500, Insurance coverage needed)
800

Describe number of bands, vehicles, signs, floats, or other articles carried or displayed along with method of participation (walking, bicycles, motorcycles etc):

Motorcycles

Describe how group is organized and supervised to insure order: Over seen By The Executive Board, Board of Directors and Road Captain

Purpose of the Event: Help our Veterans

The above information is true to the best of my knowledge and belief.

Signature of Applicant: Bruce Knight

Back to Agenda

Town of York, Maine
Special Event Permit Application

This application for a special event permit is hereby presented to the York Town Manager, 186 York Street, York, ME 03909.

Date: 2/25/16

Name of Event: YLL Opening Day Parade

Type of Event: Parade

Organization Name: York Little League Phone #: 207-752-7164

Organization Address: PO Box 696 City CN State: ME Zip: 03902

Applicant Name: Hillary Fitzgerald Phone #: 207-361-3072

Applicant Address: 15 RiverwoodDr City: York State: ME Zip: 03909

Contact Name for Day of Event: Jana Doughty Contact Phone # 207-752-7164

Date of Event: April 30, 2016 Day of Week: Saturday

Starting Time: 9am Ending Time: 9:45am

Assembly Area: YHS Football Field

Dispersal Area: Smith Field

Event Route: Weber Road to Ridge Road to Smith Field

Approximate Number of Persons Attending (If more than 500, Insurance coverage needed)
300

Describe number of bands, vehicles, signs, floats, or other articles carried or displayed along with method of participation (walking, bicycles, motorcycles etc):
Kids will be walking with signs for each LL team

Describe how group is organized and supervised to insure order: Many parent volunteers and coaches will walk with their teams, PD is there for traffic

Purpose of the Event: to kick off the beginning of the season

The above information is true to the best of my knowledge and belief.

Signature of Applicant: Hillary E. Fitzgerald

Back to Agenda