Town of York
186 York Street
York, Maine 03909-1314

Town Manager/ Selectmen (207)363-1000

Town Clerk/ Tax Collector (207)363-1003

Finance/ Treasurer (207)363-1004

Code Enforcement (207)363-1002

Planning (207)363-1007

Assessor (207)363-1005

Police Department (207)363-1031

Dispatch (207)363-4444

York Beach Fire Department (207)363-1014

York Village Fire Department (207)363-1015

Public Works (207)363-1011

Harbor Master (207)363-1000

Senior Center (207)363-1036

Parks and Recreation (207)363-1040

Fax (207)363-1009 (207)363-1019

www.yorkmaine.org

BOARD OF SELECTMEN'S MEETING AGENDA
5:30/6:00/6:30/7:00PM MONDAY, OCTOBER 3, 2016
YORK LIBRARY

5:30PM: Executive Session: Pursuant to M.R.S. § 405.6.F (Poverty Abatement – Case #16-05 and #16-06)

6:00PM: Executive Session: Pursuant to M.R.S. § 405.6.D (Collective Bargaining Contracts)

6:30PM: Workshop with the Tax Task Force

Call to Order

Opening Ceremonies

A. **Minutes**

B. **Chairman's Report**

C. **Manager's Report**

D. **Awards**
1. Bid Award: Heavy Plow Truck Chassis – Public Works
2. Bid Award: 2 Ton Truck – Public Works
3. Bid Award: Truck Body/Snowplow Installation – Public Works
4. Bid Award: 1 ½ Ton Diesel Truck – Parks and Recreation
5. Bid Award: Radio Tower – Police Department
6. Bid Award: Radio Equipment – Police Department

E. **Reports**
1. Mary-Anne Szeniawski – November Election
2. Rozanna Patane – Report on LED Interior Lighting Project, Weatherization Program, and Energy Use Data Gathering Process

F. **Citizens' Forum** – The Citizens' Forum is open to any member of the audience for comments on any matter. All comments should be respectful in tone and should be directed to the Chair. Comments should be brief and to the point. Questions that require extended answers or that cannot be readily answered will be referred to the Town Manager for follow-up.

Anyone who wishes to submit a written request for future agenda items can do so on the form available at this meeting or may obtain the form through the Town Manager's Office.

G. **Public Hearings**

1. Long Beach Avenue – Final Design

H. **Endorsements**

Business Licenses:

- Eaton's Neck, LLC DBA: Lighthouse Inn and Carriage House (Innkeeper, Food Service); located at 20 Nubble Road
- Maryjane Merritt DBA: The Union Bluff Hotel (Food Service, Liquor, Special Amusement, Innkeeper, Coin-Operated Amusement); located at 8 Beach Street
- Two Beach Street, LLC DBA: Atlantic House (Innkeeper); located at 2 Beach Street

I. **Old Business**

1. Discussion and Possible Action: Collective Bargaining Agreement, York DPW Association
2. Discussion and Possible Action: CMP Easement at 36 Main Street
3. Discussion and Possible Action: Long Beach Avenue Final Design
4. Discussion and Possible Action: Long Sands Bathhouse
5. Discussion and Possible Action: Authorization for Design and Permitting for Garage at new Police Station
6. Discussion and Possible Action: Celtic Contract for LED Streetlights

J. **New Business**

1. Discussion and Possible Action: Tax Task Force
3. Discussion and Possible Action: Adopt Hazard Mitigation Plan
4. Discussion and Possible Action: Poverty Abatements
5. Discussion and Possible Action: Pole Location Permits
6. Discussion and Possible Action: Special Event Permits

K. **Future Agendas**

L. **Other Business**

M. **Citizens' Forum**

Adjourn

REQUEST FOR ACTION BY BOARD OF SELECTMEN

DATE SUBMITTED: September 28, 2016	☒ ACTION
DATE ACTION REQUESTED: October 3, 2016	☐ DISCUSSION ONLY
SUBJECT: DPW FY 2017 Heavy Duty Plow Truck Chassis Bid Award	

DISCUSSION OF OPTIONS AVAILABLE TO THE BOARD: DPW solicited bids from truck manufactures. The following bids were received:

1. Liberty International: $66,000
2. Portland North Truck Center: $72,025

Historical Costs: *The following table shows the historical costs of this truck chassis.*

Comparison Values	*FY2011*	*FY2012*	*FY2013*	*FY2014*	*FY2015*	*FY2017*
Chassis Price				*$92,040*	*$91,900*	*$93,500*
Trade				*$30,000*	*$30,000*	*$27,500*
Chassis Price (w/Trade)	*$56,688*	*$61,290*	*$61,290*	*$62,040*	*$61,900*	*$66,000*
Percentage Increase		*+8.1%*	*0%*	*+1.2%*	*-0.2%*	*+6.6%*

RECOMMENDATION: DPW recommends that Liberty International be awarded the bid for the Heavy Duty Plow Truck Chassis.

PROPOSED MOTION: **I move to award the FY 2017 Heavy Duty Plow Truck Chassis to Liberty International Trucks in the amount of $66,000.00.**

FISCAL IMPACT: $66,000

DEPARTMENT LINE ITEM ACCOUNT: 281.0000.6002

BALANCE IN LINE ITEM IF APPROVED: $97,000

PREPARED BY: __Dean Lessard_____ REVIEWED BY: _____

Back to Agenda

Back to Agenda

Town of York

186 York Street, York Maine

BID PRICE FORM
NEW TRUCK CHASSIS

BID SUBMISSION DATE: Thursday September 22, 2016
BID SUBMISSION DEADLINE: 1:30PM
BID OPENING DATE: Thursday September 22, 2016
BID OPENING TIME: Approximately 1:30PM
BID OPENING LOCATION: Town Hall, 186 York Street, York, Maine

Proposer herby offers to provide the equipment described in the applicable specifications.

A. Name of Company submitting proposal: Liberty International Trucks

Address: 132 Pierce Road Barrington, NH 03825

Telephone: 603-665-2009

B. Provide one (1) new current Model Truck Chassis as follows:

Manufacturer: Navistar

Model Year/Number: 2017 7400 WorkStar

C. Summary of Total Costs to Town of York as Follows:

Total for Truck Chassis $ 93,500.00

Total for Truck Chassis with trade in: $ 66,000.00

Approximate delivery Date: 75-90 days

D. Name of Company Representative Authorized to Submit Proposals:

Name: Jim Ramsay

Title: Municipal Sales

Date: 9/21/16

Signature: Jim Ramsay

Return sealed bids to: Town Manager's Office
Town of York
186 York Street
York, Maine 03909

Clearly Mark Envelope: "Proposal for Plow Truck Chassis"

Back to Agenda

Town of York, DPW
International 7400 Truck Specifications

General Specifications

1. Truck shall be a 2017 International Model 7400 SFA 4X2 with a GVWR: 39,000 Calc. GVWR: 41,000. .... Yes ☑ No ☐
2. Cab configuration shall beStandard Cab w/107" BBC. .... Yes ☑ No ☐
3. Wheelbase: 177", CA: 102", Axle to Frame: 63". .... Yes ☑ No ☐
4. Wheelbase range 146" through and including 195". .... Yes ☑ No ☐

Bidder comments _____

Frame Rails

1. Heat treated Alloy Steel single rail 10.866"x3.622"x.433"thick, rated 2,654,400 lb.-in RBM. .... Yes ☑ No ☐
2. Frame shall be clear behind cab on outside as to allow for snow wing/body installation. .... Yes ☑ No ☐
3. Frame cross members, fuel tank, battery boxes and suspension shall be fastened with huck spin fasteners. .... Yes ☑ No ☐
4. Frame extension front integral; 20" in front of grill (if H.P. Fairfield wins bid OMIT) .... Yes ☑ No ☐
5. Frame rails shall have applied at factory a corrosion resistant e-coat primer. .... Yes ☑ No ☐

Bidder comments _____

Front Axles and Suspension

1. Front axle shall be Meritor 18,000 lbs. capacity wide track I beam type. .... Yes ☑ No ☐
2. Front Springs shall be Parabolic, Taper Leaf; 18,000 lbs. capacity with shock absorbers. .... Yes ☑ No ☐
3. Front spring pins shall include maintenance free rubber bushings. .... Yes ☑ No ☐
4. Front right auxiliary air bag, driver controlled is required. .... Yes ☑ No ☐

Bidder comments _____

Back to Agenda

Town of York, DPW
International 7400 Truck Specifications

Brakes

1. Dual airbrake system with Bendix ABS must be provided. ..... Yes ☑ No ☐
2. Front brakes shall be air cam, 16.5"X6.0", includes long stroke brake chambers ..... Yes ☑ No ☐
3. Rear brakes shall be air cam, 16.5"X7.0" with spring parking, includes long stroke brake chambers. ..... Yes ☑ No ☐
4. All air lines color and size coded nylon with quality quick connect airline fittings and air tank drain valve. .. Yes ☑ No ☐
5. Front and rear automatic slack adjusters shall be Haldex. ..... Yes ☑ No ☐
6. 2 Air pressure gauges, Air 1 and Air 2; located in instrument cluster shall be provided. ..... Yes ☑ No ☐
7. Front and rear brake dust shields shall be provided. ..... Yes ☑ No ☐
8. Hand control valve for rear brakes with pressure reducing valve shall be provided. ..... Yes ☑ No ☐
9. Bendix AD-9 Air Dryer heater is required; mounted inside left frame rail. ..... Yes ☑ No ☐
10. Spring Brake modulator valve R-7 for 4x2. ..... Yes ☑ No ☐
11. Air brake hoses to rear of frame for trailer connection. ..... Yes ☑ No ☐
12. Air tank location (2); one mounted under each frame rail and parallel to each rail. Front of rear suspension. .. Yes ☑ No ☐

Bidder comments _____

Steering

1. Power steering dual steering gears shall be provided. ..... Yes ☑ No ☐
2. Multi position tilting and telescoping steering column with 18" diameter wheel shall be provided. ..... Yes ☑ No ☐

Steering wheel mounting controls shall include electric horn, engine speed controls, and air horn. Yes ☑ No ☐

Bidder comments _____

Back to Agenda

Town of York, DPW
International 7400 Truck Specifications

Electrical System

1. A 12-volt, 185 amp brushless alternator shall be provided. 240 Amp Supplied ..... Yes ☑ No ☐
2. 12v power point shall be provided ..... Yes ☑ No ☐
3. Battery jump start stud shall be provided. ..... Yes ☑ No ☐
4. 8HAB, Body Builder wiring at back of cab for S/T/T/Backup/Acc. ..... Yes ☑ No ☐
5. 8NAA, Tail light wiring for standard Lt & Rt. Taillights. ..... Yes ☑ No ☐
6. 8NAA, 8' of extra cable for Lt & Rt. body mounted taillights. ..... Yes ☑ No ☐
7. Batteries shall be 12vdc AGM maintenance free and provide 2775CCA total ..... Yes ☑ No ☐
8. 8THB, Back up alarm with 102 dBA shall be activated whenever the vehicle is in reverse gear. ..... Yes ☑ No ☐
9. 8THJ, Plow light wiring harness shall be provided. ..... Yes ☑ No ☐
10. 7 way electrical connection at rear of frame for trailer ..... Yes ☑ No ☐
11. 60AAG, 6 factory installed in cab switches (latching) with 6 channel power module mounted in cab behind driver seat for body builder integration, shall be provided. Switches shall control power module through multiplex wiring. ..... Yes ☑ No ☐
12. 60AJS, 2 Red indicators for body up and low oil lights. ..... Yes ☑ No ☐
13. 60ACS, 1 Momentary switch for pump override. ..... Yes ☑ No ☐
14. 08585, Fog light switch and wiring (location to be determined) ..... Yes ☑ No ☐
15. Windshield wiper system shall be cowl mounted, provide high/low speed settings with wash and intermittent feature with program to slow with parking brake set. ..... Yes ☑ No ☐
16. Clearance marker light shall be LED ..... Yes ☑ No ☐
17. Switch toggle (latching) for strobe lights mounted to the right of steering wheel. (Controlled by BC) ..... Yes ☑ No ☐
18. 8WMA, Switch toggle (latching) work lights mounted to the right of steering wheel. (Controlled by BC) ..... Yes ☑ No ☐
19. 8WPZ, Shall provide pre trip light inspection to include all accessories multiplexed through the RPM. ..... Yes ☑ No ☐
20. Headlights will turn on if wipers are turned on. ..... Yes ☑ No ☐
21. Starter motor shall be 12 volt with thermal over-crank protection. ..... Yes ☑ No ☐
22. Shall include low coolant level indicator w/audible alarm. ..... Yes ☑ No ☐
23. 8WXD and 8WXB, Shall include park brake alarm & head light alarm. ..... Yes ☑ No ☐
24. Electrical system shall utilize Manual Reset Circuit Breakers with trip indicators. ..... Yes ☑ No ☐
25. Batteries shall be mounted under the passenger seat in a steel box. ..... Yes ☑ No ☐
26. Turn Signals, Front LED, includes side marker lights. ..... Yes ☑ No ☐

Bidder comments _____

_____

_____

Back to Agenda

Town of York, DPW
International 7400 Truck Specifications

Front End

1. Hood shall be painted medium blue code #6800 with manufacturer's premium paint and a urethane clear coat finish. ..... Yes ☑ No ☐
2. Hood shall be tilting fiberglass of three-piece design allowing for independent repair of fender sections. ..... Yes ☑ No ☐
3. All daily fluid checks shall be located on the driver's side of the engine. ..... Yes ☑ No ☐
4. Crossover air intake system, which draws intake air from the driver side of the hood, shall be provided. ..... Yes ☑ No ☐
5. Front bumper shall be powder coated gray paint. ..... Yes ☑ No ☐
6. Hood hatches, which allow access to daily fluid checks and air cleaner, shall be provide. ..... Yes ☑ No ☐
7. Chrome stationary grill shall be provided. ..... Yes ☑ No ☐
8. Cowl tray lid shall be provided. ..... Yes ☑ No ☐

Bidder comments _____

_____

_____

Cab Exterior

1. Cab shall be painted medium blue code #6800 with manufacturer's premium paint and a urethane clear coat
2. Keys shall all be alike (includes ignition and cab) with code ID Z-200 ..... Yes ☑ No ☐
3. West coast style mirrors and separate convex mirror shall be cab mounted with breakaway feature. ..... Yes ☑ No ☐
4. Mirror heads and C-loop shall be protected w/powder coated finish. ..... Yes ☑ No ☐
5. Cab steps shall be offset with non-slip grips and protected with powder coated paint. ..... Yes ☑ No ☐
6. Operable door vent pocket windows must be provided. ..... Yes ☑ No ☐
7. Air ride cab suspension system must be provided. ..... Yes ☑ No ☐
8. Cab floor pass-through for body builder wiring must be provided. ..... Yes ☑ No ☐
9. Heated mirrors shall be provided. ..... Yes ☑ No ☐
10. Exterior Grab Handle shall be provided. ..... Yes ☑ No ☐
11. Dual hood mounted heated mirrors shall be provided. ..... Yes ☑ No ☐

Bidder comments _____

_____

Back to Agenda

Town of York, DPW
International 7400 Truck Specifications

Engine

1. Engine must be an International Navistar N9 EPA 2010, SCR, 315 HP @ 2000 RPM, 950lb-ft Torque @ 1200 RPM, 2200 RPM governed speed, including #2 Bell Housing. ..... Yes ☑ No ☐
2. Engine must be equipped with Extended Life Coolant. ..... Yes ☑ No ☐
3. Effects for front PTO must be provided. ..... Yes ☑ No ☐
4. Engine block heater shall be provided. ..... Yes ☑ No ☐
5. Engine must also include intake manifold grid heater w/Engine ECM control. ..... Yes ☑ No ☐

*6. Horton on/off drive master fan ..... Yes ☐ No ☑

7. Engine shall be equipped with an single element air filter with integral snow valve and in-cab control. ..... Yes ☑ No ☐
8. Engine shall be equipped with an engine compression brake. ..... Yes ☑ No ☐
9. Electronic engine speed control, stationary, variable mounted on steering wheel. ..... Yes ☑ No ☐
10. Accessory wiring for road speed coiled under instrument panel. ..... Yes ☑ No ☐
11. Engine oil pan shall stainless steel. ..... Yes ☑ No ☐
12. Silicone radiator hoses ..... Yes ☑ No ☐

***Bidder comments** Horton Direct Drive type, two speed, with residule torque device for disengaged fan speed — Supplied

Transmission

1. Transmission shall be an Allison 3000 RDS P 6-speed automatic with 5th generation controls; close ratio, 6 speed with double overdrive and PTO provision. ..... Yes ☑ No ☐
2. Shift control shall be push button type. ..... Yes ☑ No ☐
3. Transmission synthetic lube shall be provided. ..... Yes ☑ No ☐
4. Transmission control module to be located inside cab. ..... Yes ☑ No ☐
5. PTO location on left side of transmission. ..... Yes ☑ No ☐

Bidder comments _____

Back to Agenda

Town of York, DPW
International 7400 Truck Specifications

Cab Interior

1. Cab storage shall include driver door map pocket and driver and passenger overhead storage bins with safety nets. ..... Yes ☑ No ☐
2. Cab interior shall be premium trim: Code 16WRZ ..... Yes ☑ No ☐
3. Cab interior shall be equipped with power windows w/express down and power locks. ..... Yes ☑ No ☐
4. Driver and passenger side sun visors shall be provided. ..... Yes ☑ No ☐
5. Driver's seat shall be high back with integral headrests and armrests, air suspension, and air lumbar support ..... Yes ☑ No ☐
6. Passenger's seat shall be 1-man with storage compartment underneath ..... Yes ☑ No ☐
7. Cup holders shall be provided. ..... Yes ☑ No ☐
8. Integral arm rests in driver door and driver's seat and passenger door shall be provided. ..... Yes ☑ No ☐
9. Coat hook on rear cab wall shall be provided. ..... Yes ☑ No ☐
10. Gauge cluster shall include: odometer miles, trip miles, engine hours, fault code readout. ..... Yes ☑ No ☐
11. Gauge warning shall include: low fuel warning, low oil pressure warning, high engine coolant temperature and low battery voltage. ..... Yes ☑ No ☐
12. Electronic gauges provided in gauge cluster shall include: speedometer, engine oil pressure, engine water temp, engine oil temperature, transmission oil temperature, fuel level, tachometer, voltmeter, DEF level, etc. ..... Yes ☑ No ☐
13. Gauges must be programmable to provide audible alarm to driver if gauge alert condition is met. ..... Yes ☑ No ☐
14. Cab switches shall have back lighting for night visibility. ..... Yes ☑ No ☐
15. Radio with AM/FM/WB/Clock/Bluetooth/USB Input/3mm auxiliary input shall be provided. ..... Yes ☑ No ☐
16. Fresh air filter for cab shall be provided. ..... Yes ☑ No ☐
17. High output heater/air conditioner with protection system shall be provided ..... Yes ☑ No ☐
18. Heated Windshield, one piece shall be provided. ..... Yes ☑ No ☐
19. Wrap around ergonomic dash shall be provided. ..... Yes ☑ No ☐

Bidder comments _____

_____

_____

Back to Agenda

Town of York, DPW
International 7400 Truck Specifications

Fuel Tank

1. Fuel tank shall provide 70 US gallon capacity and be mounted on left side under cab with step. ..... Yes ☑ No ☐
2. Heated, engine mounted fuel filter/water separator shall be provided, includes water in fuel sensor. ..... Yes ☑ No ☐
3. Fuel tank shall be aluminum no polished. ..... Yes ☑ No ☐
4. DEF tank shall be mounted outside left frame rail under cab. ✓ .....

Bidder comments _____

Rear Axle and Suspension

1. Meritor RS-23-160 single rear axle capacity shall be 23,000 lbs., w/200 wheel ends. ..... Yes ☑ No ☐
2. Driver controlled differential locking is required. ..... Yes ☑ No ☐
3. Axle suspension shall be single axle spring type, 31,000 lb. Cap with 4500 lb. multi leaf auxiliary. ..... Yes ☑ No ☐
4. Rear axle synthetic lube shall be used. ..... Yes ☑ No ☐
5. 6.83 Gear ratio required ..... Yes ☑ No ☐

Bidder comments _____

Exhaust System

1. Horizontal muffler/aftertreatment device shall be frame mounted right side under cab. ..... Yes ☑ No ☐
2. A single vertical tailpipe must be frame mounted to right side back of cab. ..... Yes ☑ No ☐
3. Tail pipe shall be turn back style, non-bright. ..... Yes ☑ No ☐
4. Engine compression brake for Navistar N9/10 I6 Engines; electronically activated. ..... Yes ☑ No ☐

Bidder Comments _____

Back to Agenda

Town of York, DPW
International 7400 Truck Specifications

Wheels and Tires

1. Front wheels shall be steel, 8,000lb, Heavy Duty .500" thick, 22.5x9 inch hub piloted disc type..... Yes ☑ No ☐
2. Rear wheels shall be steel, 8,000lb, Heavy Duty .472" thick, 22x8.25 inch hub piloted disc type..... Yes ☑ No ☐
3. Wheel seals shall be oil lubricated..... Yes ☑ No ☐
4. Front Tires shall be Continental HA3 City Service 315/80R22.5 load range L or approved equal..... Yes ☑ No ☐
5. Rear Tires shall be Continental HDR2 12R22.5 load range H. ...See document enclosed..... Yes ☐ No ☑
6. Front and rear nylon wheel guards shall be provided..... Yes ☑ No ☐
7. Gray Powder coated wheels shall be provided..... Yes ☑ No ☐

Bidder comments _____

Warranty

1. Shall be 60 Months or 100,000 miles on major components..... $465.00 ..... Yes ☑ No ☐
2. Shall be 84 Months/100,000 miles/3,600hrs engine/engine electronics incl. injectors...$4,500.00..... Yes ☑ No ☐
3. Shall be 84 Months/100,000 miles/3,600hrs Aftertreatment..... $1,200.00 ..... Yes ☑ No ☐
4. Shall be 60 Months unlimited miles on transmission..... $450.00 ..... Yes ☑ No ☐
5. Shall be 60 Months Unlimited miles for towing. ....275 Per incident) $840.00 ....550 Per) $1,200.00 ..... Yes ☑ No ☐
6. Please include price for warranties separately..... Yes ☑ No ☐

Bidder comments * Quoted Prices Are Not included in this proposal

Manuals

1. Government and Municipal Siler package; Two year limited subscription of On-Command Service/Parts..... Yes ☑ No ☐
2. Please include price for Service MAXX and DLB full featured subscriptions separately..... Yes ☑ No ☐

Bidder comments

$695.00 $750.00 Renewal Rate

* Not included in this proposal

Back to Agenda

7400 SFA 4x2

Sales Proposal For:

Town of York - Highway

Presented By:

LIBERTY INT'L TRKS OF NH

Back to Agenda

INTERNATIONAL®

September 20, 2016

Prepared For:
Town of York - Highway
Mat Gray
Finance Office
York, ME 03909-
(207)363 - 1011

Presented By:
LIBERTY INT'L TRKS OF NH
James C Ramsay
1400 S. WILLOW STREET
MANCHESTER NH 03103 -
(603)623-8873

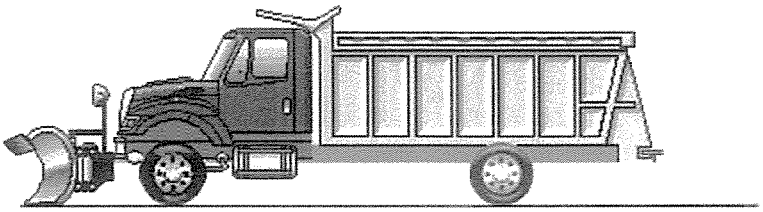

Model Profile
2017 7400 SFA 4X2 (SA525)

MISSION:	Requested GVWR: 39000. Calc. GVWR: 41000
DIMENSION:	Wheelbase: 177.00, CA: 102.00, Axle to Frame: 63.00
ENGINE, DIESEL:	{Navistar N9} EPA 2010, SCR, 315 HP @ 2000 RPM, 950 lb-ft Torque @ 1200 RPM, 2200 RPM Governed Speed, 315 Peak HP (Max)
TRANSMISSION, AUTOMATIC:	{Allison 3000_RDS_P} 5th Generation Controls; Close Ratio, 6-Speed, With Double Overdrive; On/Off Hwy; Includes Oil Level Sensor, With PTO Provision, Less Retarder, With 80,000-lb GVW & GCW Max.
CLUTCH:	Omit Item (Clutch & Control)
AXLE, FRONT NON-DRIVING:	{Meritor MFS-18-133A} Wide Track, I-Beam Type, 18,000-lb Capacity
AXLE, REAR, SINGLE:	{Meritor RS-23-160} Single Reduction, 23,000-lb Capacity, 200 Wheel Ends, Driver Controlled Locking Differential Gear Ratio: 6.83
CAB:	Conventional
TIRE, FRONT:	(2) 315/80R22.5 Load Range L CITY SERVICE HA3 (CONTINENTAL), 480 rev/mile, 68 MPH, All-Position
TIRE, REAR:	(4) 12R22.5 Load Range H G282 MSD (GOODYEAR), 481 rev/mile, 68 MPH, Drive
SUSPENSION, RR, SPRING, SINGLE:	Vari-Rate; 31,000-lb Capacity, Includes 4500-lb Capacity Multileaf Auxiliary
PAINT:	Cab schematic 100GM Location 1: 6800, Deep Tartan Blue (Prem) Chassis schematic N/A

Back to Agenda

Code	Description
SA52500	Base Chassis, Model 7400 SFA 4X2 with 177.00 Wheelbase, 102.00 CA, and 63.00 Axle to Frame.
1CAJ	FRAME RAILS Heat Treated Alloy Steel (120,000 PSI Yield); 10.866" x 3.622" x 0.433" (276.0mm x 92.0mm x 11.1mm); 456.0" (11582mm) Maximum OAL
1LLA	BUMPER, FRONT Steel, Swept Back
	Includes : BUMPER, FRONT Powder Coated Gray (Argent) Color
1WDS	FRAME EXTENSION, FRONT Integral; 20" In Front of Grille
1WEV	WHEELBASE RANGE 146" (370cm) Through and Including 195" (495cm)
2ARZ	AXLE, FRONT NON-DRIVING {Meritor MFS-18-133A} Wide Track, I-Beam Type, 18,000-lb Capacity
	Notes : The following features should be considered when calculating Front GAWR: Front Axles; Front Suspension; Brake System; Brakes, Front Air Cam; Wheels; Tires.
3ADG	SUSPENSION, FRONT, SPRING Parabolic, Taper Leaf; 18,000-lb Capacity; With Shock Absorbers
	Includes : SPRING PINS Rubber Bushings, Maintenance-Free
	Notes : The following features should be considered when calculating Front GAWR: Front Axles; Front Suspension; Brake System; Brakes, Front Air Cam; Wheels; Tires.
3WAJ	SPRINGS, FRONT AUXILIARY Air Bag, Right Side Only, Driver Control
4091	BRAKE SYSTEM, AIR Dual System for Straight Truck Applications
	Includes : BRAKE LINES Color and Size Coded Nylon : DRAIN VALVE Twist-Type : GAUGE, AIR PRESSURE (2) Air 1 and Air 2 Gauges; Located in Instrument Cluster : PARKING BRAKE CONTROL Yellow Knob, Located on Instrument Panel : PARKING BRAKE VALVE For Truck : QUICK RELEASE VALVE On Rear Axle for Spring Brake Release: 1 for 4x2, 2 for 6x4 : SLACK ADJUSTERS, FRONT Automatic : SLACK ADJUSTERS, REAR Automatic : SPRING BRAKE MODULATOR VALVE R-7 for 4x2, SR-7 with relay valve for 6x4
	Notes : Rear Axle is Limited to 23,000-lb GAWR with Code 04091 BRAKE SYSTEM, AIR and Standard Rear Air Cam Brakes Regardless of Axle/Suspension Ordered
4193	BRAKES, FRONT, AIR CAM 16.5" x 6", Includes 24 Sqln Long Stroke Brake Chambers
	Notes

Back to Agenda

Code	Description
	: The following features should be considered when calculating Front GAWR: Front Axles; Front Suspension; Brake System; Brakes, Front Air Cam; Wheels; Tires.
4619	TRAILER CONNECTIONS Four-Wheel, With Hand Control Valve and Tractor Protection Valve, for Straight Truck
4732	DRAIN VALVE {Berg} Manual; With Pull Chain, for Air Tank
	Includes : DRAIN VALVE Mounted in Wet Tank
4AZA	AIR BRAKE ABS {Bendix AntiLock Brake System} Full Vehicle Wheel Control System (4-Channel)
4EBS	AIR DRYER {Bendix AD-9} With Heater
	Includes : AIR DRYER LOCATION Inside Left Rail, Back of Cab
4EXU	BRAKE CHAMBERS, REAR AXLE {Bendix EverSure} 30/30 Spring Brake
4EXV	BRAKE CHAMBERS, FRONT AXLE {Bendix} 24 Sqin
4LAA	SLACK ADJUSTERS, FRONT {Haldex} Automatic
4LGA	SLACK ADJUSTERS, REAR {Haldex} Automatic
4NDB	BRAKES, REAR, AIR CAM S-Cam; 16.5" x 7.0"; Includes 30/30 Sq.In. Long Stroke Brake Chamber and Spring Actuated Parking Brake
	Notes : The following features should be considered when calculating Rear GAWR: Rear Axles; Rear Suspension; Brake System; Brakes, Rear Air Cam; Brake Shoes, Rear; Special Rating, GAWR; Wheels; Tires.
4SBC	AIR COMPRESSOR {Bendix Tu-Flo 550} 13.2 CFM Capacity
4WBX	DUST SHIELDS, FRONT BRAKE for Air Brakes
4WDM	DUST SHIELDS, REAR BRAKE for Air Brakes
4WZJ	AIR TANK LOCATION (2) : One Mounted Under Each Frame Rail, Front of Rear Suspension, Parallel to Rail
5710	STEERING COLUMN Tilting and Telescoping
5CAL	STEERING WHEEL 2-Spoke, 18" Dia., Black
5PTB	STEERING GEAR (2) {Sheppard M100/M80} Dual Power
7BEP	EXHAUST SYSTEM Switchback Horizontal Aftertreatment Device, Frame Mounted Right Side Under Cab; Includes Single Vertical Tail Pipe, Frame Mounted Right Side Back of Cab
7SDL	ENGINE COMPRESSION BRAKE for Navistar N9/10 I6 Engines; Electronically Activated
7WAZ	TAIL PIPE (1) Turnback Type, Non-Bright, for Single Exhaust

Back to Agenda

Code	Description
8000	ELECTRICAL SYSTEM 12-Volt, Standard Equipment Includes : DATA LINK CONNECTOR For Vehicle Programming and Diagnostics In Cab : FUSES, ELECTRICAL SAE Blade-Type : HAZARD SWITCH Push On/Push Off, Located on Top of Steering Column Cover : HEADLIGHT DIMMER SWITCH Integral with Turn Signal Lever : HEADLIGHTS (2) Sealed Beam, Round, with Chrome Plated Bezels : JUMP START STUD Located on Positive Terminal of Outermost Battery : PARKING LIGHT Integral with Front Turn Signal and Rear Tail Light : STARTER SWITCH Electric, Key Operated : STOP, TURN, TAIL & B/U LIGHTS Dual, Rear, Combination with Reflector : TURN SIGNAL SWITCH Self-Cancelling for Trucks, Manual Cancelling for Tractors, with Lane Change Feature : WINDSHIELD WIPER SWITCH 2-Speed with Wash and Intermittent Feature (5 Pre-Set Delays), Integral with Turn Signal Lever : WINDSHIELD WIPERS Single Motor, Electric, Cowl Mounted : WIRING, CHASSIS Color Coded and Continuously Numbered
8518	CIGAR LIGHTER Includes Ash Cup
8585	FOG LIGHTS Prewire; Includes Auxiliary Toggle Switch and Wiring to Front Bumper, for Driving Lights or Fog Lights Mounted by Customer
8899	JUMP START STUD (2) Remote Mounted
8GHK	ALTERNATOR {Delco Remy 40SI} Brushless, 12 Volt 240 Amp. Capacity, Pad Mount, with Remote Voltage Sensor
8HAB	BODY BUILDER WIRING Back of Standard Cab at Left Frame or Under Extended or Crew Cab at Left Frame; Includes Sealed Connectors for Tail/Amber Turn/Marker/ Backup/ Accessory Power/Ground and Sealed Connector for Stop/Turn
8MMG	BATTERY SYSTEM {Deka/EAST PENN 9A31} Maintenance-Free (3) AGM 12-Volt 2775CCA Total
8NAA	TAIL LIGHT WIRING MODIFIED Includes: Wiring for Standard Lt & Rt Tail Lights; Separate 8.0' of Extra Cable Wiring for Lt & Rt Body Mounted Tail Lights
8RGA	2-WAY RADIO Wiring Effects; Wiring With 20 Amp Fuse Protection, Includes Ignition Wire With 5 Amp Fuse, Wire Ends Heat Shrink and Routed to Center of Header Console in Cab
8RMA	RADIO AM/FM/WB/Clock/Bluetooth/USB Input/3MM Auxiliary Input, MP3, Apple Device Play & Control, Bluetooth for Phone & Music, with Multiple Speakers
8THB	BACK-UP ALARM Electric, 102 dBA
8THJ	AUXILIARY HARNESS 3.0' for Auxiliary Front Head Lights and Turn Signals for Front Plow Applications
8TME	TRAILER CONNECTION SOCKET 7-Way; Mounted at Rear of Frame, Wired for Turn Signals Independent of Stop, Compatible With Trailers That Have Amber or Side Turn Lamps

Back to Agenda

Code	Description
8VAY	HORN, ELECTRIC Disc Style
8WCL	HORN, AIR Black, Single Trumpet, Air Solenoid Operated
8WGL	WINDSHIELD WIPER SPD CONTROL Force Wipers to Slowest Intermittent Speed When Park Brake Set and Wipers Left on for a Predetermined Time
8WMA	SWITCH, TOGGLE, FOR WORK LIGHT Lighted; on Instrument Panel and Wiring Effects for Customer Furnished Back of Cab Light
8WPH	CLEARANCE/MARKER LIGHTS (5) {Truck Lite} Amber LED Lights, Flush Mounted on Cab or Sunshade
8WPZ	TEST EXTERIOR LIGHTS Pre-Trip Inspection will Cycle all Exterior Lamps Except Back-up Lights
8WRB	HEADLIGHTS ON W/WIPERS Headlights Will Automatically Turn on if Windshield Wipers are turned on
8WTL	STARTING MOTOR {Delco Remy 39MT} 12 Volt; Gear Reduced, With Thermal Over-Crank Protection
8WWJ	INDICATOR, LOW COOLANT LEVEL With Audible Alarm
8WXB	HEADLIGHT WARNING BUZZER Sounds When Head Light Switch is on and Ignition Switch is in "Off" Position
8WXD	ALARM, PARKING BRAKE Electric Horn Sounds in Repetitive Manner When Vehicle Park Brake is "NOT" Set, With Ignition "OFF" and any Door Opened
8XAH	CIRCUIT BREAKERS Manual-Reset (Main Panel) SAE Type III With Trip Indicators, Replaces All Fuses Except For 5-Amp Fuses
8XDZ	BATTERY BOX Steel, Mounted Inside the Cab, Under Passenger Seat, 3 Battery Capacity
8XGT	TURN SIGNALS, FRONT Includes LED Side Turn Lights Mounted on Fender
9ANG	HOOD, HATCH (01) for Servicing
9HAN	INSULATION, UNDER HOOD for Sound Abatement
9HBM	GRILLE Stationary, Chrome
9HBN	INSULATION, SPLASH PANELS for Sound Abatement
9WBC	FRONT END Tilting, Fiberglass, With Three Piece Construction; for 2007 & 2010 Emissions
10021	CHASSIS COATING Corrosion Resistant E-Coat Primer Coating for Single Frame Rails
10060	PAINT SCHEMATIC, PT-1 Single Color, Design 100
	Includes : PAINT SCHEMATIC ID LETTERS "GM"
10761	PAINT TYPE Base Coat/Clear Coat, 1-2 Tone
10769	PAINT CLASS Premium Color

Back to Agenda

Code	Description
10943	KEYS - ALL ALIKE Fleet - Includes Ignition and Cab Door Keys
10UAD	VEHICLE REGISTRATION IDENTITY ID for 49 States, Excluding California
10WBB	KEYS - ALL ALIKE, ID Z-200
10WJH	PROMOTIONAL PACKAGE Government and Municipal Silver Package; Two Year Limited Subscription of On-Command Service Information (Formerly Fleet ISIS), and On-Command Parts Information (Formerly Fleet Parts Catalog), Requires Specific Feature Combinations
11001	CLUTCH Omit Item (Clutch & Control)
12703	ANTI-FREEZE Red, Extended Life Coolant; To -40 Degrees F/ -40 Degrees C, Freeze Protection
12851	PTO EFFECTS, ENGINE FRONT Less PTO Unit, Includes Adapter Plate on Engine Front Mounted
12926	RADIATOR HOSES Silicone; Molded
12959	BLOCK HEATER, ENGINE {Phillips} 120V/1250W Includes : BLOCK HEATER SOCKET Receptacle Type; Mounted below Drivers Door
12NWD	ENGINE, DIESEL {Navistar N9} EPA 2010, SCR, 315 HP @ 2000 RPM, 950 lb-ft Torque @ 1200 RPM, 2200 RPM Governed Speed, 315 Peak HP (Max) Includes : AIR COMPRESSOR AIR SUPPLY LINE Naturally-Aspirated (Air Brake Chassis Only) : COLD STARTING EQUIPMENT Intake Manifold Electric Grid Heater with Engine ECM Control : CRUISE CONTROL Electronic; Controls Integral to Steering Wheel : ENGINE OIL DRAIN PLUG Magnetic : ENGINE SHUTDOWN Electric, Key Operated : FUEL FILTER Included with Fuel/Water Separator : FUEL/WATER SEPARATOR Fuel/Water Separator and Fuel Filter in a Single Assembly; With Water-in-Fuel Sensor; Engine Mounted : GOVERNOR Electronic : OIL FILTER, ENGINE Spin-On Type : WET TYPE CYLINDER SLEEVES
12THZ	FAN DRIVE {Horton Drivemaster Polar Extreme} Direct Drive Type, Two Speed, With Residual Torque Device for Disengaged Fan Speed Includes : FAN Nylon
12UCW	RADIATOR Aluminum, Cross Flow, Series System; 1228 Sqin Core and 648 Sqin Charge Air Cooler and With Transmission Oil Cooler
12UPA	FEDERAL EMISSIONS {Navistar N9 & N10} EPA, OBD and GHG Certified for Calendar Year 2016

Back to Agenda

Code	Description
12VAG	AIR CLEANER Single Element, with Integral Snow Valve and In-Cab Control Includes : GAUGE, AIR CLEANER RESTRICTION Air Cleaner Mounted
12VXT	THROTTLE, HAND CONTROL Engine Speed Control; Electronic, Stationary, Variable Speed; Mounted on Steering Wheel
12VYL	ACCESSORY WIRING, SPECIAL for Road Speed Wire Coiled Under Instrument Panel for Customer Use
12VYP	ENGINE CONTROL, REMOTE MOUNTED - No Provision Furnished for Remote Mounted Engine Control
12WPY	OIL PAN Stainless Steel, for N9/N10 Engines
12WZE	EMISSION COMPLIANCE Federal, Does Not Comply With California Clean Air Idle Regulations
13AVR	TRANSMISSION, AUTOMATIC {Allison 3000_RDS_P} 5th Generation Controls; Close Ratio, 6-Speed, With Double Overdrive; On/Off Hwy; Includes Oil Level Sensor, With PTO Provision, Less Retarder, With 80,000-lb GVW & GCW Max.
13WBL	TRANSMISSION SHIFT CONTROL {Allison} Push-Button Type; for Allison 3000 & 4000 Series Transmission
13WLP	TRANSMISSION OIL Synthetic; 29 thru 42 Pints
13WUC	ALLISON SPARE INPUT/OUTPUT for Rugged Duty Series (RDS); General Purpose Trucks, Construction
13WYH	TRANSMISSION TCM LOCATION Located Inside Cab
13WYR	SHIFT CONTROL PARAMETERS Allison 3000 or 4000 Series Transmissions, 5th Generation Controls, with EcoCal and Dynamic Shift Sensing (FuelSense Basic)
13XAL	PTO LOCATION Left Side of Transmission
14ARB	AXLE, REAR, SINGLE {Meritor RS-23-160} Single Reduction, 23,000-lb Capacity, 200 Wheel Ends, Driver Controlled Locking Differential . Gear Ratio: 6.83 Includes : REAR AXLE DRAIN PLUG (1) Magnetic, For Single Rear Axle Notes : The following features should be considered when calculating Rear GAWR: Rear Axles; Rear Suspension; Brake System; Brakes, Rear Air Cam; Brake Shoes, Rear; Special Rating, GAWR; Wheels; Tires. : When Specifying Axle Ratio, Check Performance Guidelines and TCAPE for Startability and Performance
14SAL	SUSPENSION, RR, SPRING, SINGLE Vari-Rate; 31,000-lb Capacity, Includes 4500-lb Capacity Multileaf Auxiliary Notes

Back to Agenda

Code	Description
	: The following features should be considered when calculating Rear GAWR: Rear Axles; Rear Suspension; Brake System; Brakes, Rear Air Cam; Brake Shoes, Rear; Special Rating, GAWR; Wheels; Tires.
14WMG	AXLE, REAR, LUBE {EmGard FE-75W-90} Synthetic Oil; 30 thru 39.99 Pints
15DYP	DEF TANK 9.5 U.S. Gal. 36.0L Capacity, Frame Mounted Outside Left Rail, Under Cab
15LKG	FUEL/WATER SEPARATOR with Thermostatic Fuel Temperature Controlled Electric Heater, and Filter Restriction/Change Indicator, Includes Standard Equipment Water-in-Fuel Sensor
15SWE	FUEL TANK Top Draw; Non-Polished Aluminum, 26" Diam., 70 U.S. Gal., 265 L Capacity Mounted Left Side, Under Cab
16030	CAB Conventional
	Includes : ARM REST (2) Molded Plastic; One Each Door : COAT HOOK, CAB Located on Rear Wall, Centered Above Rear Window : CUP HOLDERS Two Cup Holders, Located in Lower Center of Instrument Panel : DOME LIGHT, CAB Rectangular, Door Activated and Push On-Off at Light Lens, Timed Theater Dimming, Integral to Console, Center Mounted : GLASS, ALL WINDOWS Tinted : GRAB HANDLE, CAB INTERIOR (1) "A" Pillar Mounted, Passenger Side : GRAB HANDLE, CAB INTERIOR (2) Front of "B" Pillar Mounted, One Each Side : INTERIOR SHEET METAL Upper Door (Above Window Ledge) Painted Exterior Color : STEP (4) Two Steps Per Door
16HBA	GAUGE CLUSTER English With English Electronic Speedometer
	Includes : GAUGE CLUSTER (6) Engine Oil Pressure (Electronic), Water Temperature (Electronic), Fuel (Electronic), Tachometer (Electronic), Voltmeter, Washer Fluid Level : ODOMETER DISPLAY, Miles, Trip Miles, Engine Hours, Trip Hours, Fault Code Readout : WARNING SYSTEM Low Fuel, Low Oil Pressure, High Engine Coolant Temp, and Low Battery Voltage (Visual and Audible)
16HGH	GAUGE, OIL TEMP, AUTO TRANS , for Allison Transmission
16HHE	GAUGE, AIR CLEANER RESTRICTION {Filter-Minder} With Black Bezel Mounted in Instrument Panel
16HKT	IP CLUSTER DISPLAY On Board Diagnostics Display of Fault Codes in Gauge Cluster
16HLJ	GAUGE, DEF FLUID LEVEL
16JNV	SEAT, DRIVER {National 2000} Air Suspension, High Back With Integral Headrest, Cloth, Isolator, 1 Chamber Lumbar, 2 Position Front Cushion Adjust, -3 to +14 Degree Back Angle Adjust
	Includes : SEAT BELT 3-Point, Lap and Shoulder Belt Type

Code	Description
16SEE	GRAB HANDLE Chrome; Towel Bar Type With Anti-Slip Rubber Inserts; for Cab Entry Mounted Left Side Only at "B" Pillar
16SJW	MIRROR, CONVEX, HOOD MOUNTED (2) {Lang Mekra} Heated, Left and Right Sides 7.44" Sq
16SMX	SEAT, PASSENGER {Seats, Inc.} Non Suspension, High Back, Fixed Back, Integral Headrest, Cloth, for use with Batteries in Cab
16SNB	MIRRORS (2) {Lang Mekra} Rectangular, Thermostatically Controlled Heated Heads, Black Heads, Brackets and Arms, Breakaway Type, 7.55" x 14.1" Integral Convex Both Sides, 102" Inside Spacing
16VSL	WINDSHIELD Heated, Single Piece
16WBY	ARM REST, RIGHT, DRIVER SEAT
16WCT	AIR CONDITIONER {Blend-Air} With Integral Heater & Defroster Includes : HEATER HOSES Premium : HOSE CLAMPS, HEATER HOSE Mubea Constant Tension Clamps : REFRIGERANT Hydrofluorocarbon HFC-134A
16WJT	INSTRUMENT PANEL Center Section, Ergonomic Panel
16WJU	WINDOW, POWER (2) and Power Door Locks, Left and Right Doors, Includes Express Down Feature
16WKY	HVAC FRESH AIR FILTER
16WLS	FRESH AIR FILTER Attached to Air Intake Cover on Cowl Tray in Front of Windshield Under Hood
16WRZ	CAB INTERIOR TRIM Premium Includes : "A" PILLAR COVER Molded Plastic : CAB INTERIOR TRIM PANELS Cloth Covered Molded Plastic, Full Height; All Exposed Interior Sheet Metal is Covered Except for the Following: with a Two-Man Passenger Seat or with a Full Bench Seat the Back Panel is Completely Void of Covering : CAB SOUND INSULATION Includes Dash and Engine Cover Insulators : CAB, INTERIOR TRIM, CLOSEOUT Lower Dash Closeout Panel; Molded Plastic; Under Instrument Panel Driver Side : CONSOLE, OVERHEAD Molded Plastic; With Dual Storage Pockets with Retainer Nets, CB Radio Pocket, Speakers, and Reading Lights : COURTESY LIGHT (2) Mounted In Front Map Pocket Left and Right Side : DOOR TRIM PANELS with Cloth Insert on Bolster Driver and Passenger Doors : FLOOR COVERING Rubber, Black : GAUGE, TEMPERATURE, AMBIENT Includes Wiring and Sensor With Display Unit Mounted in Cluster : HEADLINER Soft Padded Cloth : INSTRUMENT PANEL TRIM Molded Plastic with Black Center Section

Back to Agenda

Code	Description
	: STORAGE POCKET, DOOR (2) Molded Plastic (Carpet Texture), Full-Length; Driver and Passenger Doors : SUN VISOR (3) Padded Vinyl: 2 Moveable (Front-to-Side) Primary Visors, Driver Side with Vanity Mirror and Toll Ticket Strap, plus 1 Auxiliary Visor (Front Only), Driver Side
16WSK	CAB REAR SUSPENSION Air Bag Type
16XXC	COWL TRAY LID
27DPN	WHEELS, FRONT {Accuride 29039} DISC; 22.5x9.00 Rims, Powder Coat Steel, 5-Hand Hole, 10-Stud, 285.75mm BC, Hub-Piloted, Flanged Nut, with Steel Hubs, Non-Standard Offset, with .5" Thick Disc
28DUK	WHEELS, REAR {Accuride 29169} DUAL DISC; 22.5x8.25 Rims, Powder Coat Steel, 5-Hand Hole, 10-Stud, 285.75mm BC, Hub-Piloted, Flanged Nut, with .472" Thick Increased Capacity Disc and Steel Hubs
29597	WHEEL SEALS, REAR {Stemco Voyager} Oil Lubricated Wheel Bearings
29598	WHEEL SEALS, FRONT {Stemco Voyager} Oil Lubricated Wheel Bearings ILO Standard Oil Seals
29PAW	PAINT IDENTITY, FRONT WHEELS Disc Front Wheels; With Vendor Applied Gray Powder Coat Paint
29PAX	PAINT IDENTITY, REAR WHEELS Disc Rear Wheels; With Vendor Applied Gray Powder Coat Paint
29WAP	WHEEL GUARDS, FRONT {Accuride} for Metric Hub Piloted Wheels with Flanged Mounting Nuts Mounted Between Hub and Wheel
29WAR	WHEEL GUARDS, REAR {Accuride} for Metric Hub Piloted Wheels with Flanged Mounting Nuts, Mounted Between Hub & Wheel and Between Dual Wheels
60AAG	BDY INTG, REMOTE POWER MODULE Mounted Inside Cab behind Driver Seat; Up to 6 Outputs & 6 Inputs, Max. 20 amp. per Channel, Max. 80 amp Total (Includes 1 Switch Pack With Latched Switches)
60ACS	BDY INTG, SWITCH MOMNTRY 3POS Rocker, Backlit, with "ON" Indicator Mounted on Dash, Latching Software, for 1; Auxiliary Load 20 amp. Maximum; Power Available Only in "Ignition" or "Accessory" Position, Output Also Controlled by a Customer Remote Mounted Switch (requires 1 Remote Power Module input & 1 output)
60AJS	BDY INTG, DASH IND. LT RED (2) for Optional Usage Customer to Program
7382158105	(4) TIRE, REAR 12R22.5 Load Range H G282 MSD (GOODYEAR), 481 rev/mile, 68 MPH, Drive
7792545435	(2) TIRE, FRONT 315/80R22.5 Load Range L CITY SERVICE HA3 (CONTINENTAL), 480 rev/mile, 68 MPH, All-Position

Services Section:

Back to Agenda

INTERNATIONAL®

Financial Summary
2017 7400 SFA 4X2 (SA525)

September 20, 2016

(US DOLLAR)

Description	Price
Net Sales Price:	$93,500.00

Please feel free to contact me regarding these specifications should your interests or needs change. I am confident you will be pleased with the quality and service of an International vehicle.

Approved by Seller:

Official Title and Date

Authorized Signature

Accepted by Purchaser:

Firm or Business Name

Authorized Signature and Date

This proposal is not binding upon the seller without Seller's Authorized Signature

Official Title and Date

The TOPS FET calculation is an estimate for reference purposes only. The seller or retailer is responsible for calculating and reporting/paying appropriate FET to the IRS.

Back to Agenda

Back to Agenda

Town of York

186 York Street, York Maine

BID PRICE FORM
NEW TRUCK CHASSIS

BID SUBMISSION DATE: Thursday September 22, 2016
BID SUBMISSION DEADLINE: 1:30PM
BID OPENING DATE: Thursday September 22, 2016
BID OPENING TIME: Approximately 1:30PM
BID OPENING LOCATION: Town Hall, 186 York Street, York, Maine

Proposer herby offers to provide the equipment described in the applicable specifications.

A. Name of Company submitting proposal: Portland North Truck Center

Address: 110 Gray Rd Falmouth, ME 04105

Telephone: 207-797-8080

B. Provide one (1) new current Model Truck Chassis as follows:

Manufacturer: International

Model Year/Number: 2017 7400 SFA 4x2

C. Summary of Total Costs to Town of York as Follows:

Total for Truck Chassis: $ 90,025.00

Total for Truck Chassis with trade in: $ (18,000.00) $ 72,025

Approximate delivery Date: 90 DAYS FROM ORDER

D. .Name of Company Representative Authorized to Submit Proposals:

Name: Richard Morrison

Title: Sales Manager

Date: 8/22/16

Signature: Richard E. Morrison

Return sealed bids to: Town Manager's Office
Town of York
186 York Street
York, Maine 03909

Clearly Mark Envelope: "Proposal for Plow Truck Chassis"

Back to Agenda

REQUEST FOR ACTION BY BOARD OF SELECTMEN

DATE SUBMITTED: September 28, 2016	☒ ACTION
DATE ACTION REQUESTED: October 3, 2016	☐ DISCUSSION ONLY
SUBJECT: DPW 2 Ton Truck Bid Award	

DISCUSSION OF OPTIONS AVAILABLE TO THE BOARD: The Department solicited bids from four different truck vendors. Three of the four returned bids for a 2 ton truck with dump body, plow and wing setup. All the truck bids have the same features. The following bids were received:

1. Quirk Ford	$83,895.00
2. Starkey Ford	$85,770.00
3. Rowe Ford	$89,294.00

RECOMMENDATION: DPW recommends that Quirk Ford be awarded the bid for the Two Ton Plow Truck.

PROPOSED MOTION: **I move that the bid for the DPW Two Ton Truck bid be awarded to the low bid from Quirk Ford in the amount of $83,895.00.**

FISCAL IMPACT:$83,895
DEPARTMENT LINE ITEM ACCOUNT: 282.0000.6002
BALANCE IN LINE ITEM IF APPROVED: $1,105

PREPARED BY: Dean Lessard_____ REVIEWED BY: _____

Back to Agenda

TOWN OF YORK
BID PRICE FORM
NEW 4WD TRUCK

BID SUBMISSION DATE:
BID SUBMISSION DEADLINE: 1:30PM
BID OPENING DATE: Thursday September 22, 2016
BID OPENING TIME: Approximately 1:30PM
BID OPEN LOCATION: York Town Hall

Proposer herby offers to provide the equipment described in the applicable specifications.

A. Name of Company submitting proposal: Quirk Ford

Address: 7 Water Street Hallowell, Me

Telephone: 430-1621

B. Provide one (1) new current complete truck package as follows:

Manufacturer: Ford F550

Year /Model: 2017 - 4x4 Cabl Chasse

C. Summary of Total Costs to Town of York as Follows: with trade in

Total for one (1) New Truck, Dump Body, and Plows:

Includes HP Pair Field Guide

Total Net Cost to Town (in numerals) $ 83,895.00

Back to Agenda

Total Net Cost to Town (in words):

Eighty three Thousand Eight hundred Ninety five 00

D. Approximate delivery Date: 12-14 weeks approx on Chassis Body Co ?

E. Name of Company Representative Authorized to Submit Proposals:

Name: LEO Chicoine

Title: FLEET SALES MGR

Date: 9-19-16

Signature:

Return sealed bids to: Town Manager's Office
Town of York
186 York Street
York, Maine 03909

Clearly Mark Envelope: "**Proposal on 4WD Truck Chassis, Dump Body and Plow Package**"

Back to Agenda

Town of York, DPW
Ford F-550 Truck Specifications

Model:

1. 2017 Ford F-550 Chassis Cab XL Regular Cab, 145" Wheelbase, 4x4, Dual Rear Wheels, 4.88 Limited Slip axle. ..... Yes ☒ No ☐
   Bidder comments: _____

Engine:

1. Ford 6.7L Power Stroke Turbo Diesel V8 engine. ..... Yes ☒ No ☐
2. Shall come with Engine Block Heater. ..... Yes ☒ No ☐
   Bidder comments: _____

Transmission:

1. 6 speed automatic transmission with external filter. ..... Yes ☒ No ☐
2. Selectable tow/haul switch. ..... Yes ☒ No ☐
3. Heavy Duty Transmission Cooler ..... Yes ☒ No ☐
4. Transmission Power take off provision. ..... Yes ☒ No ☐
   Bidder comments: _____

G.V.W.R:

1. Not less than 19,500lbs ..... Yes ☒ No ☐
   Bidder comments: _____

Axles and Frame:

1. Heaviest Front Axle and Suspension available (Extra Heavy Service Suspension). 67X ..... Yes ☒ No ☐
2. Heaviest Rear Axle and Suspension available (Payload plus Upgrade). 19,500 ..... Yes ☒ No ☐
3. Heaviest Frame available. ..... Yes ☒ No ☐
4. Heavy Duty Shocks. ..... Yes ☒ No ☐
5. *Bidder comments:* _____

Electrical:

1. Dual Extra Heavy-Duty Alternators. ..... 67B ..... Yes ☒ No ☐
2. Dual Heavy Duty Batteries, AGM if available. ..... STD Type only ..... ~~Yes ☐ No ☐~~
3. Exterior Backup Alarm. ..... 76C ..... Yes ☒ No ☐
   Bidder comments: _____

Back to Agenda

Town of York, DPW
Ford F-550 Truck Specifications

Color:

1. Medium Blue clear coat (Blue Jeans). ..... Yes ☒ No ☐

   Bidder comments: _____

Interior:

1. High output heater/defroster with A/C. ..... Yes ☒ No ☐
2. Full vinyl/rubber floor covering. ..... Yes ☒ No ☐
3. AM/FM Stereo w/4 Speakers. ..... Yes ☒ No ☐
4. Tinted Safety Glass. ..... Yes ☒ No ☐
5. Vinyl 40/20/40 split bench seat, Color Gray. ..... Yes ☒ No ☐
6. Integrated Trailer Brake Controller. ..... 52.B ..... Yes ☒ No ☐
7. 110V/400W Outlet. ..... Yes ☐ No ☐
8. Electronic Shift on the fly 4 wheel drive. ..... 213 ..... Yes ☒ No ☐
9. Operator commanded regeneration. ..... 99.K ..... Yes ☒ No ☐
10. Up-fitter Switches. ..... Yes ☒ No ☐

    Bidder comments: _____

Exterior:

1. Power Equipment Group Package. ..... 90L ..... Yes ☒ No ☐
2. Largest single fuel tank offered. ..... Yes ☒ No ☐
3. High Capacity Trailer Tow Package. ..... 535 ..... Yes ☒ No ☐
4. Molded Cab steps. ..... 18.B ..... Yes ☒ No ☐
5. Telescoping/Folding mirrors with heated glass. ..... 54.K ..... Yes ☒ No ☐
6. Roof mounted marker lights. ..... Yes ☒ No ☐

   Bidder comments: _____

Tires:

1. LT225/70R19.5 Max Traction Tires. ..... T.G.B ..... Yes ☒ No ☐
2. Spare Wheel, Tire and Jack. ..... 51.2 ..... Yes ☒ No ☐

   Bidder comments: _____

Warranty:

1. Manufacturer's warranty shall be a minimum of 3 years or 36,000mi on entire vehicle. ..... Yes ☒ No ☐

   Bidder comments: _____

Back to Agenda

HPF

Town of York, DPW
Ford F-550 Truck Specifications

Dump Body:

1. 9' steel dump body w/drop sides and underbody hoist. ..... Yes☑ No☐
2. Set of front and rear mud flaps. ..... Yes☑ No☐
3. All lights and reflectors to meet DOT Spec. ..... Yes☑ No☐
4. 24" Cab protector with window screen. ..... Yes☑ No☐
5. Body shall be epoxy primed then polyurethane top coated black. ..... Yes☑ No☐

Bidder comments: _____

Hydraulics:

1. Cirus central hydraulic system, transmission PTO driven. ..... Yes☑ No☐
2. Hot shift PTO off Transmission, wired to up-fitter switches. ..... Yes☑ No☐
3. Cirus valve w/electronic proportional controls w/5 year warranty. ..... Yes☑ No☐
4. Valve to be mounted in stainless steel enclosure or approved option. ..... Yes☑ No☐
5. Single Blacktip Proportional Joystick w/button mounted with Cirus EZ Spread on jump seat (removable). Joystick is to control all plow and wing functions. Hoist will be controlled by a momentary switch on the dash or roof in customer approved location. ..... Yes☑ No☐
6. Cirus EZ Spread to provide open loop electronic spreader control. ..... Yes☑ No☐
7. Stainless Steel Hydraulic Tubing shall be used throughout. ..... Yes☑ No☐

Bidder comments: _____

Snowplows:

1. Custom Front Hitch w/ double acting cylinder, Quick connects for plow angle mounted to left side of cylinder, Fisher Intensifier plow lights, 10' poly reversible plow with trip edge, carbide cutting edge with face plate, rubber snow deflector. Plow shall be equipped with removable screw jack to facilitate easy removal. ..... Yes☑ No☐
2. Plow frame shall be equipped with removable screw jack mounts to facilitate complete removal of plow frame with plow and wing attached for storage in summer months. ..... Yes☑ No☐
3. 9' Steel wing plow w/single 5/8"x6"x108" cutting edge, w/ custom frame, frame should be mounted to right frame and "tied" to the left frame. The rear wing assembly shall be mounted so that the wing arms are perpendicular to the assembly. ..... Yes☑ No☐

Bidder comments: _____

Tow Plate/Hitch:

1. Hitch plate shall be installed with a square receiver. ..... Yes☑ No☐

Bidder comments: _____

This fax was received by GFI FaxMaker fax server. For more information, visit: http://www.gfi.com

Back to Agenda

Prepared For:
DEAN LESSARD
TOWN OF YORK
186 YORK STREET
YORK, ME 03909
Phone: (207) 363-1010

Prepared By:
LEO CHICOINE
QUIRK AUTO GROUP
7 WATER STREET
HALLOWELL, ME 04347
Phone: (207) 430-1621
Fax: (207) 991-5539
Email: lchicoine@quirkauto.com

2017 Ford Super Duty F-550 DRW

F5H XL 4WD Reg Cab 145" WB 60" CA

Photo may not represent exact vehicle or selected equipment.

Back to Agenda

Prepared For:
DEAN LESSARD
TOWN OF YORK
186 YORK STREET
YORK, ME 03909
Phone: (207) 363-1010

Prepared By:
LEO CHICOINE
QUIRK AUTO GROUP
7 WATER STREET
HALLOWELL, ME 04347
Phone: (207) 430-1621
Fax: (207) 991-5539
Email: lchicoine@quirkauto.com

2017 Fleet/Non-Retail Ford Super Duty F-550 DRW XL 4WD Reg Cab 145"

WINDOW STICKER

2017 Ford Super Duty F-550 DRW XL 4WD Reg Cab 145" WB 60" CA
* 6.7 L/406 CID * Intercooled Turbo Diesel V-8
* 6-Speed Automatic w/OD

Interior: - No color has been selected.
Exterior 1: - No color has been selected.
Exterior 2: - No color has been selected.

CODE	MODEL	MSRP
F5H	2017 Ford Super Duty F-550 DRW XL 4WD Reg Cab 145" WB 60" CA	$41,570.00
	OPTIONS	
99T	ENGINE: 6.7L 4V OHV POWER STROKE V8 TURBO DIESEL B20	$8,485.00
44W	TRANSMISSION: TORQSHIFT 6-SPEED AUTOMATIC	$0.00
660A	ORDER CODE 660A	$0.00
X8L	LIMITED SLIP W/4.88 AXLE RATIO	$360.00
TGB	TIRES: 225/70RX19.5G BSW MAX TRACTION	$215.00
N1	BLUE JEANS METALLIC	$0.00
___	STANDARD PAINT	$0.00
AS	MEDIUM EARTH GRAY, HD VINYL 40/20/40 SPLIT BENCH SEAT	$0.00
90L	POWER EQUIPMENT GROUP	$915.00
62R	TRANSMISSION POWER TAKE-OFF PROVISION	$280.00
213	4X4 ELECTRONIC-SHIFT-ON-THE-FLY (ESOF)	$185.00
98R	OPERATOR COMMANDED REGENERATION (OCR)	$250.00
67B	DUAL EXTRA HEAVY-DUTY ALTERNATORS	$115.00
41H	ENGINE BLOCK HEATER	$0.00
52B	TRAILER BRAKE CONTROLLER	$270.00
535	HIGH CAPACITY TRAILER TOW PACKAGE	$1,080.00
68M	GVWR: 19,500 LB PAYLOAD PLUS UPGRADE PACKAGE	$1,155.00
67X	EXTRA HEAVY-SERVICE SUSPENSION PACKAGE	$125.00
76C	EXTERIOR BACKUP ALARM (PRE-INSTALLED)	$140.00
512	SPARE TIRE, WHEEL & JACK	$350.00

Report content is based on current data version referenced. Any performance-related calculations are offered solely as guidelines. Actual unit performance will depend on your operating conditions.

GM AutoBook, Data Version: 454.0, Data updated 8/30/2016
© Copyright 1986-2012 Chrome Data Solutions, LP. All rights reserved.
Customer File:

Back to Agenda

Prepared For:
DEAN LESSARD
TOWN OF YORK
186 YORK STREET
YORK, ME 03909
Phone: (207) 363-1010

Prepared By:
LEO CHICOINE
QUIRK AUTO GROUP
7 WATER STREET
HALLOWELL, ME 04347
Phone: (207) 430-1621
Fax: (207) 991-5539
Email: lchicoine@quirkauto.com

2017 Fleet/Non-Retail Ford Super Duty F-550 DRW XL 4WD Reg Cab 145"

WINDOW STICKER

18B	PLATFORM RUNNING BOARDS	$320.00
61J	6-TON HYDRAULIC JACK	INC
43C	110V/400W OUTLET	$75.00
	SUBTOTAL	**$55,890.00**
	Advert/Adjustments	$0.00
	Destination Charge	$1,195.00
	TOTAL PRICE	**$57,085.00**

Est City: mpg
Est Highway: mpg
Est Highway Cruising Range: mi

Factory Incentive 3000 —
54085.00
(Dealer Tim Brun - SES Included) HP Fairfield 43499.00
Base Price
$97584.00

Report content is based on current data version referenced. Any performance-related calculations are offered solely as guidelines. Actual unit performance will depend on your operating conditions.

GM AutoBook, Data Version: 454.0, Data updated 8/30/2016
© Copyright 1986-2012 Chrome Data Solutions, LP. All rights reserved.
Customer File:

Back to Agenda

H. P. FAIRFIELD, LLC

BID # 142390

HP FAIRFIELD LLC

"MUNICIPAL SPECIALISTS"

PHONE: 207-885-4895 FAX: 866-896-9559

http://www.hpfairfield.com

FROM:
Travis Baker
65 Pleasant Hill Road
Scarborough , ME 04074

QUOTED TO: Town Of York
186 York St
102720 York , ME 03909
ATTN: Tim Deperrio

DATE: September 14, 2016
CUSTOMER PHONE: 207-363-1011
CUSTOMER FAX:

COMMENTS: F550 Plow Pkg. - PER YORK SPEC.

QTY	DESCRIPTION	PRICE	EXT. PRICE
1	HPF CUSTOM FRONT PLOW HITCH AMERICAN FTP 10' POLY REVERSIBLE PLOW W/ JACK STAND, RUBBER DEFLCTOR, CARBIDE & COVER FISHER INTENSIFIER PLOW LIGHTS HPF CUSTOM WING SYSTEM - LOW MOUNT TRIP BLOCKS AND ARMS HPF 108 STEEL WING 9' RUGBY FDS 9-3 STEEL DUMP BODY W/ DROP SIDES & UNDER BODY HOIST ONE TON LIGHT PACKAGE	$43,499.00	$43,499.00

CIRUS CENTRAL HYDRAULIC SYSTEM
PTO DRIVEN OFF TRANSMISSION
BT210 PLOW FUNCTION CONTROL (TO BE REMOVED FOR SUMMER USE)
EZ SPREAD GROUND SPEED CONTROL
JEM VALVES IN ENCLOSURE (5 YR. WARRANTY)
STAINLESS STEEL LINES

INSTALLED & PAINTED (EPOXY PRIMED & POLYURETHANE)

OPTIONS:
1)SWENSON MDV944 SS SANDER PACKAGE PER SPEC. ADD: $9999.00
2)LED STROBE (8) ADD: $650.00
3) WING LIGHT : INCLUDED IN BASE PACKAGE
4) (2) SANDER LIGHTS: INCLUDED IN BASE PACKAGE
5) TIMBREN (CHASSIS DEALER OPTION)
6) GLEDHILL HITCH: N/A PER VENDOR
7) STAINLESS BODY UPGRADE ADD: $3300.00
8) CIRUS SPREAD SMART PACKAGE ADD: $6500.00

SIGNED Travis Baker ACKNOWLEDGED

QUOTE TOTAL $43,499.00

Serving New England for over 60 Years

Back to Agenda

REQUEST FOR ACTION BY BOARD OF SELECTMEN

DATE SUBMITTED: September 28, 2016	☒ ACTION
DATE ACTION REQUESTED: October 3, 2016	☐ DISCUSSION ONLY
SUBJECT: DPW Truck Body/Snowplow Installation Bid Award	

DISCUSSION OF OPTIONS AVAILABLE TO THE BOARD: DPW solicited bids from two different equipment vendors. The following bids were received:

1. H.P. Fairfield: $82,999
2. Viking Cives: $86,530

RECOMMENDATION: DPW recommends that H.P. Fairfield be awarded the bid for the Dump Body/Snow removal equipment installation with on the new Public Works Truck Chassis.

PROPOSED MOTION: **I move to award the bid for the Dump Body/Snowplow Installation to H.P. Fairfield LLC in the amount of $82,999.**

FISCAL IMPACT: $82,999

DEPARTMENT LINE ITEM ACCOUNT: 281.0000.6002

BALANCE IN LINE ITEM IF APPROVED: $14,001

PREPARED BY: _Dean Lessard_____ REVIEWED BY: _____

Back to Agenda

TOWN OF YORK
BID PRICE FORM
DUMP BODY AND SNOW PLOW INSTALLATION BID SPECIFICATIONS

BID SUBMISSION DATE: Thursday September 22, 2016
BID SUBMISSION DEADLINE: 1:30PM
BID OPENING DATE: Thursday September 22, 2016
BID OPENING TIME: Approximately 1:30PM
BID OPENING LOCATION: York Town Hall

Proposer herby offers to provide the services and/or equipment described in the applicable specifications.

A. Name of Company submitting proposal: H. P. FAIRFIELD LLC

Address: 65 PLEASANT HILL RD.
SCARBOROUGH

Telephone : (207) 399-4501

B. Discounted Government price in words: EIGHTY TWO THOUSAND NINE HUNDRED NINETY NINE

Price in numerals: $ 82,999.00

C. Proposer warrants that price will stand as quoted for at least 30 days after bid opening. YES

D. Approximate installation time: 30-45 DAYS AFTER RECIEPT OF CHASSIS, EQUIPMENT & START DATE

Back to Agenda

E. Name of Company Representative authorized to submit proposals:

Name: TRAVIS BAKER

Title: SENIOR SALES REP.

Date: 9/21/16

Signature: [signature]

Return sealed bids to: Town Manager's Office
York Town Hall
186 York Street, York, Maine 03909

Clearly mark envelope: "PROPOSAL FOR DUMP BODY AND SNOW PLOW INSTALLATION"

Back to Agenda

H. P. FAIRFIELD, LLC

BID # 142397

HP FAIRFIELD LLC

"MUNICIPAL SPECIALISTS"

PHONE: 207-885-4895 FAX: 866-896-9559

http://www.hpfairfield.com

FROM:
Travis Baker
65 Pleasant Hill Road
Scarborough , ME 04074

QUOTED TO: Town Of York
186 York Street, P. O. Box 9
York , ME 03909-0009

ATTN: Dean Lessard

DATE: September 14, 2016

CUSTOMER PHONE: 207-363-1011

CUSTOMER FAX: 207-363-1012

COMMENTS: **SNOW PLOW, WING, SIDE DUMP, HYDRAULICS**

QTY	DESCRIPTION	PRICE	EXT. PRICE
1	HPF MODEL PS4-20 HI LIFT PATROL WING ASSEMBLY, TRIP ARMS CUSTOM TILT AND DETACH HITCH, GLED HILL QCP HITCH, REXROTH A10 LOAD SENSE PUMP, **CIRUS SPREAD SMART SYSTEM, ARMADILLO MOUNT. LOAD SENSE VALVES IN ENCLOSURE, ROAD WATCH, HYDRAULIC CALCIUM , CAMERA READY 10" SCREEN** AMERICAN MODEL 3911PISA-RR85 POLYMER REVERSIBLE PLOW WITH RUBBER FLAP AND PARA-LEVEL LIFT, AND JACK AMERICAN MODEL 10DRA FULL TRIP WING, PAINTED BLUE	$82,999.00	$82,999.00

EVEREST SDS STAINLESS STEEL SIDE DUMP BODY
- 3/16 AR400 FLOOR
STAINLESS STEEL CAB SHIELD ,
MUD FLAPS FRONT AND REAR WITH ANTISAIL ON FRONT FLAPS
STAINLESS GRIP STRUT OVER REAR WHEELS
AIR OPERATED TAILGATE - SOLID - NO COAL DOOR
CALCIUM SYSTEM WITH 120 GAL. TANK
HALOGEN HEAD LIGHTS
INSTALLED AND PAINTED TO YOUR SPEC

STAINLESS STEEL LINES , INCLUDING BODY RETURN LINES

FOR ELECTRIC LOAD COVER WITH POWER HOOP

TOW PLATE AND HITCH INSTALLED

12 MONTH WARRANTY ON PARTS AND LABOR
5 YEAR WARRANTY ON VALVES

SIGNED Travis Baker ACKNOWLEDGED

QUOTE TOTAL $82,999.00

Serving New England for over 60 Years

Back to Agenda

Town of York
186 York Street
York, Maine 03909-1314

Town Manager/
Selectmen
(207)363-1000

Town Clerk/
Tax Collector
(207)363-1003

Finance/
Treasurer
(207)363-1004

Code Enforcement
(207)363-1002

Planning
(207)363-1007

Assessor
(207)363-1005

Police Department
(207)363-1031

Dispatch
(207)363-2557

York Beach Fire
Department
(207)363-1014

York Village Fire
Department
(207)363-1015

Public Works
(207)363-1011

Harbor Master
(207)363-1000

Senior Center/
General Assistance
(207)363-1036

Parks and
Recreation
(207)363-1040

Fax
(207)363-1009
(207)363-1019

www.yorkmaine.org

DUMP BODY/SNOW PLOW BID

TO: Authorized Equipment Dealers
FROM: Dean Lessard, Public Works Director, Town of York
SUBJECT: Dump Body and Snowplow Installation Bid Specifications
DATE: September 8, 2016

The Town of York is accepting proposals for the purchase of the following equipment to be installed on one (1) 2017 IH 7400 Truck Chassis with 102" C/A to be provided by the Town.

Price proposals must be on the attached form and must include all handling, installation, preparation, freight and warranty charges. The Town reserves the right to waive any formalities and to accept or reject any proposal received in the best interest of the Town. Any exceptions to or variations from the specifications heretofore listed must be explained in detail on a separate sheet. The Town of York also warrants that the price will stand as quoted for at least thirty (30) days after the bid opening.

Proposals will be received until 1:30 P.M. on Thursday September 22, 2016 at the Town Manager's Office, 186 York Street, York, Maine 03909. All proposals will be opened and read aloud at that time at the York Town Hall, 186 York Street, York Maine 03909. Sealed proposals should be clearly marked **"PROPOSAL FOR DUMP BODY AND SNOW PLOW INSTALLATION".**

Any questions concerning these specifications should be addressed to Timothy DePerrio, Department of Public Works Foreman or Matt Gray, Fleet Supervisor at 363-1010.

The Town of York does not pay sales tax.

Back to Agenda

EQUIPMENT INSTALLATION SPECIFICATIONS

Body: 304 Stainless steel side dump body with 3/16" AR400 or equivalent floor (steel). 10' long, 6-8.5 yard capacity. Continuously welded. Double acting telescopic piston.

Conveyor chain to carry material to a polymer or stainless chute and spinner.

Stainless steel cab protector full width, mounted 3" over cab with full air pressure. Continuously welded to body.

Stainless steel fold up ladder on driver's side.

Air operated tailgate latch. Tailgate control to be mounted right side of driver's seat in cab.

Remote grease fittings for body lubrication.

Front and rear mud flaps with anti-sail brackets.

Body up light.

Stainless steel tailgate, solid, no doors.

Body to include all ICC lighting. Also to include 2 sets of 6" oval cutouts in rear of body per Town of York Spec. 1 set will have stop/turn lights.

In Cab Controls: To be mounted between driver's and passenger's seats per Town of York specs.

Plow: 11' Polymer reversible plow with trip edge design and rubber snow deflector. Trailer type screw jack with support foot to be mounted on rear left side of plow. Plow shall be equipped with a PolarFlex cutting edge system.

Snow Plow Hitch: Custom tilt and detach hitch with power up and down plow lift cylinder. Step welded on driver's side of plow frame for ease of access to engine compartment. Angle hoses for plow shall be mounted to frame on the drivers side of plow lift piston. Halogen headlights/turn signals mounted on top of plow frame, staggered height extensions. Plow setup for Gledhill QCP hitch mounted at 14".

Back to Agenda

Wing: 10' steel wing with 9' mold board steel full trip with trip arms and block. Wing shall come equipped with 2-5/8" x 8" x 108" cutting edges.

Wing Mount Rear Mast: Hi lift patrol wing assembly with approximately 24" of travel. The rear wing assembly shall be mounted so that the wing arms are perpendicular to the assembly. The assembly shall be mounted to the right frame and "tied" to the left frame. A differential relief valve shall be provided to protect the cylinder

Wing Mount Front Mast: The front mast shall provide approximately 24" of wing lift.

Wing Arms: Full trip stand off arms. Shall consist of one lower arm and one upper arm with attached lift cylinder and trip spring. The arms shall be adjustable in length from 60" to 72". Both upper and lower arms shall be equipped with a swivel to prevent damage to the arms when folding in tight to chassis.

Hydraulic System: Rexroth A10 Load Sense Pump with low oil shutdown and manual override. To be mounted with companion flanges for easy removal. Cirus Proportional load sense valve bank, mounted in a Cirus Stainless Steel enclosure on the right frame rail behind the wing tower, to provide all hydraulic functions necessary for complete operation. Cirus Controls Multi Stix 216 Joystick controls. Cirus Spreadsmart RX touch with 10" color display to include Camera compatability and 2 Camera's one on the wing side and one on the rear. Also must include Wi-Fi data transfer w/store and forward GPS, Integrated Roadwatch temperature system, closed loop spreader operation. All controls to be mounted in cab to Town's spec. Hydraulic tank, to be mounted behind cab as part of wing structure. Spin on hydraulic filter to be included.

Hydraulic Cylinders: Shall be of the highest quality and treated for best rust prevention.

Liquid Prewet System: 135 gallon minimum poly tank, headboard mounted. Closed loop hydraulic driven brass pump, integrated to the prewetting controller. Two spray nozzles mounted in an area as to spray liquid on the granular material before the spinner.

Load cover: Electric direct drive motor, aluminum arms, power hoop asphalt rated.

Tow plate: Hitch mounted to Town of York specs.

Roadwatch: Road temperature system.

Back to Agenda

Paint: All additions and components except stainless steel or aluminum components shall be cleaned, epoxy primed and then polyurethane top coated. Front plow hitch, patrol wing assembly, wing and arms shall be painted IH #6800 Deep Tartan Blue. Frame mounted components on rear half of truck shall be painted black except for the patrol wing tower itself.

Installation: It is the intention and requirement of these specifications to duplicate the existing configuration of a 2016 IH truck presently owned by the Town of York Public Works Department and available for viewing. The bidder is advised to become completely familiar and satisfied with this requirement.

Equipment must meet all State, Federal, and industry safety standards, as appropriate.

Warranty: Vendor/Manufacturer shall warrant the equipment furnished, including all accessories or accessory equipment against defects in workmanship or materials including labor for a period of one (1) year.

Options:

Back to Agenda

TOWN OF YORK
BID PRICE FORM
DUMP BODY AND SNOW PLOW INSTALLATION BID SPECIFICATIONS

BID SUBMISSION DATE: Thursday September 22, 2016
BID SUBMISSION DEADLINE: 1:30PM
BID OPENING DATE: Thursday September 22, 2016
BID OPENING TIME: Approximately 1:30PM
BID OPENING LOCATION: York Town Hall

Proposer hereby offers to provide the services and/or equipment described in the applicable specifications

A. Name of Company submitting proposal:
Viking Cives
Address: 2085 Lisbon Road
Lewiston,Maine 04240
Telephone: (207) 624-1928

B. Discounted Government price in words:
Eighty six thousand, five hundred thirty dollars.
Price in numerals: $86,530.00

C. Proposer warrants that price will stand as quoted for at least 30 days after bid opening: Yes

D. Approximate installation time: 90-120 Days

Back to Agenda

F. Name of Company Representative authorized to submit proposals

Name: Timothy Ireland

Title: Regional Sales Manager

Date: 9/20/2016

Signature: [signature]

Return sealed bids to: Town Manager's Office
York Town Hall
186 York Street, York, Maine 03909

Clearly mark envelope: "PROPOSAL FOR DUMP BODY AND SNOW PLOW INSTALLATION"

Back to Agenda

Cives Corporation, dba
Viking Cives of Maine
2085 Lisbon Road
Lewiston, Maine 04240
Phone: (207) 624-1928
Fax: (207) 783-9700

tireland@vikingcives.com

QUOTATION

Factory/Shipper
Catalog

Customer: Town of York
Contact:
Address:

Phone:
Fax:
Attn:

Quote Number: 278
Quote Date: 9/20/2016
Quote valid until: 11/4/2016
For:
Terms: Net 30 days
Salesperson: Tim Ireland
FOB: Lewiston, ME

QUANTITY	DESCRIPTION	UNIT PRICE	AMOUNT
	Custom Hitch with mtg. bolts nuts and pins (P10)		
1	S10500F - Custom Hitch Plow & Wing Mount-Power Tilt (incl. yoke)		
1	S10996 - Access Step		
1	S11010 - 4" x 10" DA Cylinder (cannot be used with Husting Hitches)		
1	S12700 - SAE "C" 2 bolt (constant running pump)		
1	S13010 - Push Center, 30-1/2"		
1	S14000 - Lift group - All plows except Metros with chain lift leveling device -not needed if using telescopic lift yoke		
1	QCP Hitch Assembly (Truck Half & Plow Half)		
1	S30600F - FH20 Hydraulic Assembly w/mtg. brk't (3 x 20 cyl.)		
1	S33300F - Full Trip Hinge (not to be used with trip edge wing)		
	Rear Mast Weldment - includes slides, cylinders, mounting brackets - no tank)		
1	S40547 Rear Mast H10591P RH Assy. CSS		
1	S55520 - R1142TEP Moldboard Reversible, HD Polymer Trip Edge 10 degree		
1	Screw Jack mounted to Plow Frame		
1	S55700 - Twin Cylinder (cushion valve) Power Reverse Pushframe (PRR)		
1	S55760 - 30-1/2" pushlug swivel		
1	S55860 - Dead Sheave Leveling Device (stainless steel cable)		
1	S55900 - 10 Degree Moldboard Shoes (pair)		
1	S55905 - Curb Shoes (pair)		
1	S55940 - Rubber Deflector 12" wide - for 11' Moldboard		
1	11'Polar Flex Cutting Edge		
1	S60000 - 120WHD RH WING WELDMENT - Standard RH Wing		
2	S60400 - Steel Blade 12" punching - for 120 Wing, 5/8x8x108		
1	S61041F - Full Trip Hydraulic Arms (cushion spring lower)		
1	Viking Proline PL1011SD 10' Stainless Steel Side Dump Body, Constructed of Type 304 Stainless Steel, CS90-4-2 Double Acting Hoist, ¼" Hardox 450 Floor, Solid Curb Side Wall, Front LH Discharge, Ladder Front Left, Stainless Steel Side Dump Hinge and Pin, Remote Grease, Front and Rear Mud Flaps with Anti-Sail bracket, Body Up Light, Solid Stainless Steel Tailgate, (2) Oval Cutouts in each rear corner post, ICC Lights, Plow Lights, Donovan Electric Cover with Power Hoop, ¾" Pintle Plate with Hook and D-Rings, 160 Gallon Head Board Mounted Calcium Tank with Hydraulic Calcium Pump.		
1	Hydraulics to Include: Cirus Load Sense Pump with shutoff, Hydraulic Tank behind Cab, Hoses, Stainless Steel Hydraulic Lines where feasible, Drive Shaft, Cirus MS216 Joy Stick Control with Armadillo Arm Mount, Spread Smart RX 10" Touch Screen Sander Control, Road Watch, Drive By Transmitter and Software, Cirus Valves in Stainless Steel Frame Mounted Enclosure.		
1	Labor to Install		
		Quote Total:	**$86,530.00**
		Discount:	
		Total Due:	**$86,530.00**

Back to Agenda

Cives Corporation, dba
Viking Cives of Maine
2085 Lisbon Road
Lewiston, Maine 04240
Phone: (207) 624-1928
Fax: (207) 783-9700
tireland@vikingcives.com

QUOTATION

Factory/Shipper
Catalog

The following options may be added:

QUANTITY	DESCRIPTION	PRICE EACH	AMOUNT

Customer must fill out the information below before the order can be processed...

Accepted by:	
Date:	
P.O. number:	

The price and terms on this quotation are not subject to verbal changes or other agreements unless approved in writing by the Home Office of the Seller. All quotations and agreements are contingent upon strikes, accidents, fires, availability of material and all other causes beyond our control. Prices are based on costs and conditions existing on date of quotation and are subject to change by the Seller before final acceptance.

- Typographical and stenographic errors subject to corrections. Purchaser agrees to accept either overage or shortage not in excess of ten percent to be charged pro-rata. Purchaser assumes liability for patent and copyright infringement when goods are mode to Purchaser's specifications. When quotation specifies material to be furnished by the purchaser, ample allowance must be made for reasonable spoilage and material must be of suitable quality to facilitate efficient production.
- Conditions not specifically stated herein shall be governed by the established trade customs. Terms inconsistent with those stated herein which may appear on Purchaser's formal order will not be binding on the Seller.
- Unless otherwise stated, Installation charges do not include modifications to exhaust systems, cab protectors or bumpers.

Back to Agenda

REQUEST FOR ACTION BY BOARD OF SELECTMEN

DATE SUBMITTED: September 27, 2016	☒ ACTION
DATE ACTION REQUESTED: 10/3/16	☐ DISCUSSION ONLY
SUBJECT: Bid Award for 1.5 ton Truck	

DISCUSSION OF OPTIONS AVAILABLE TO THE BOARD:

The Parks and Recreation Department recently went out to bid for a new 4wd 1.5 ton dump truck with plow/salt machine. We received 3 bids broken down as follows;

	Starkey Ford	Arundel Ford	Rowe Ford
Chassis	47,423	48,523	49,751
Less trade	- 5,250	-5,000	-6,025
Sub-Total	42,173	43,523	43,726
Body	7,193	8,425	7,193
Plow	5,697	5,450	5,697
Sub-Total	55,063	57,398	56,616
Salt Machine	6,128	6,250	6,128
Total	61,191	63,648	62,744

While the bid included a salt machine, that is the responsibility of the Public Works Department and will be funded separately. This recommendation is to award the bid for the Chassis, body and plow only.

RECOMMENDATION: To award the bid for the Parks and Recreation Department 1 ½ ton truck to include chassis, body and plow to Starkey Ford of York, Maine in the amount of $55,063.

Back to Agenda

PROPOSED MOTION: Move to award the bid for the Parks and Recreation Department 1 ½ ton truck to include chassis, body and plow to Starkey Ford of York, Maine in the amount of $55,063.

FISCAL IMPACT: $55,063
DEPARTMENT LINE ITEM ACCOUNT: Public Buildings Grounds and Beaches Capital Maintenance
BALANCE IN LINE ITEM IF APPROVED: 4wd 1.5 ton Dump Truck and Plow $56,000

PREPARED BY: Michael Sullivan REVIEWED BY: _____

Back to Agenda

STARKEY FORD, Inc.

422 Route 1
P.O. Box 37
York, Maine 03909-0037
www.starkeyford.com

Tel. 207.363.2483
Fax. 207.363.3547
E-mail. info@starkeyford.com

SEPTEMBER 14, 2016
TOWN OF YORK
TOWN MANAGER'S OFFICE
186 YORK STREET
YORK, ME 03909

DEAR SIR;

STARKEY FORD INC SUBMITS THE FOLLOWING BID FOR ONE (1) FORD 2017 ½ TON DIESEL 4X4 TRUCK WITH DUMP BODY, PLOW AND SPREADER.

AS QUOTED FOR THE TOWN OF YORK PARKS & RECREATION DEPARTMENT ON ONE (1) 2017 FORD DIESEL 4X4 TRUCK WITH DUMP BODY, PLOW AND SPREADER IS AS FOLLOWS:

PRICE WITH MESSER BODY COMPANY	
2017 FORD TRUCK	$47,423.00
LESS TRADE 2006 CHEVY SILVERADO	5,250.00
MESSER BODY	20,136.00
NET BID PRICE	$62,309.00

PRICE WITH FAIRFIELD BODY CO	
2017 FORD TRUCK	$47423.00
LESS TRADE 2006 CHEVY SILVERAGO	5,250.00
FAIRFIELD BODY	19,018.00
NET BID PRICE	$61,191.00

SINCERELY,

ROBERT BERRY JR
SALES & LEASING CONSULTANT

1. DELIVERY TIME AS DICTATED BY MANUFACTURER
2. ENC: 7

Back to Agenda

TOWN OF YORK
PARKS & RECREATION

TOWN OF YORK
BID PRICE FORM
NEW 1 and ½ Ton Diesel Dump Truck Package

BID SUBMISSION DATE:
BID SUBMISSION DEADLINE: 9/15/2016 at 12:00pm
BID OPENING DATE:9/15/2016
BID OPENING TIME: Approximately 12:30pm
BID OPEN LOCATION: York Town Hall

Proposer herby offers to provide the equipment described in the applicable specifications.

A. Name of Company submitting proposal: Stackey Ford

Address: P.O. Box 37 York Me 03909

Telephone: 207-363-2483

B. Provide one (1) new 1 and ½ ton Diesel 4x4 truck

Manufacturer: Ford

Year /Model: 2017 F550

Back to Agenda

MESSER BODY

C. Summary of Total Costs to Town of York as Follows:

Total for one (1) 1 and ½ Ton Diesel 4x4 dump truck package: including dump body, plow and spreader.

Total Net Cost to Town (in numerals) $62,309.00

Total Net Cost to Town (in words):

SIXTY TWO THOUSAND THREE HUNDRED NINE DOLLARS

D. Approximate delivery Date: AS DICTATED BY MANUFACTURER

E. Name of Company Representative Authorized to Submit Proposals:

Name: ROBERT BERRY JR

Title: SALES & LEASING CONSULTANT

Date: SEPTEMBER 14, 2016

Signature:

Return sealed bids to: Town Manager's Office
Town of York
186 York Street
York, Maine 03909

Clearly Mark Envelope: "**PROPOSALS ON 4WD 1 and ½ Ton Diesel 4x4 truck package**".

Back to Agenda

FAIRFIELD BODY

C. Summary of Total Costs to Town of York as Follows:

Total for one (1) 1 and ½ Ton Diesel 4x4 dump truck package: including dump body, plow and spreader.

Total Net Cost to Town (in numerals) $61,191.00

Total Net Cost to Town (in words):

SIXTY ONE THOUSAND ONE HUNDRED NINETY ONE DOLLARS

D. Approximate delivery Date: AS DICTATED BY MANUFACTURER

E. Name of Company Representative Authorized to Submit Proposals:

Name: ROBERT BERRY JR, SALES & LEASING CONSULTANT

Title: SALES & LEASING CONSULTANT

Date: SEPTEMBER 14, 2016

Signature:

Return sealed bids to: Town Manager's Office
Town of York
186 York Street
York, Maine 03909

Clearly Mark Envelope: "**PROPOSALS ON 4WD 1 and ½ Ton Diesel 4x4 truck package**".

Back to Agenda

Truck Specifications

Models:

1. Ford F-550XL 4x4 Regular Cab Dual Rear Wheel Chassis..... ☑ yes ☐ no

Bidder Comments:_____

Engine:

1. Ford: 6.7L Power Stroke V8 Turbo Diesel..... ☑ yes ☐ no

Bidder Comments:_____

G.V.W.R.:

1. Not Less Than 19,500lbs. ..... ☑ yes ☐ no

Bidder Comments:_____

Transmission:

1. Six speed automatic transmission with external filter ..... ☑ yes ☐ no
2. Selectable tow/haul switch ..... ☑ yes ☐ no
3. Heavy-duty transmission cooler ..... ☑ yes ☐ no
4. Electric 4wd shift on dash ..... ☑ yes ☐ no

Bidder Comments:_____

Back to Agenda

Wheelbase:

1. 60" cab to axle ..... ☑ yes ☐ no
2. 145" wheelbase ..... ☑ yes ☐ no

Bidder Comments: _____

_____

_____

Axles:

1. 4.88axle ratio, limited slip ..... ☑ yes ☐ no
2. Heaviest front and rear axle and spring combination for dump body and snowplow applications ..... ☑ yes ☐ no
3. Heavy-duty shocks ..... ☑ yes ☐ no

Bidder Comments: _____

_____

Electrical:

1. Highest output 12-volt alternator ..... ☑ yes ☐ no
2. Dual heavy-duty batteries ..... ☑ yes ☐ no

Bidder Comments: _____

_____

_____

Color:

1. Metallic Grey ..... ☑ yes ☐ no

Bidder Comments: _____

_____

_____

Interior:

1. High output heater/defroster with air conditioning ..... ☑ yes ☐ no
2. Full vinyl/rubber floor covering ..... ☑ yes ☐ no
3. AM/FM radio/clock ..... ☑ yes ☐ no
4. Tinted safety glass ..... ☑ yes ☐ no
5. Vinyl 40/20/40 split bench seat ..... ☑ yes ☐ no
6. Intermittent wipers with washer ..... ☑ yes ☐ no
7. Full gauge package ..... ☑ yes ☐ no
8. Integrated trailer brake controller ..... ☑ yes ☐ no
9. Operator commanded regeneration ..... ☑ yes ☐ no

Back to Agenda

Bidder Comments:_____

Exterior:

1. Power Equipment Group Package ..... ☑ yes ☐ no
2. Largest single fuel tank offered ..... ☑ yes ☐ no
3. Snowplow prep package ..... ☑ yes ☐ no
4. High capacity trailer tow package ..... ☑ yes ☐ no
5. Molded cab steps ..... ☑ yes ☐ no
6. Engine block heater ..... ☑ yes ☐ no
7. Rust Preventative Treatment (Ziebart) ..... ☑ yes ☐ no

Bidder Comments:_____

Tires:

1. 5-LT225/70Rx19.5G All Season ..... ☑ yes ☐ no

Bidder Comments:_____

Warranty:

1. Manufacturer's warranty shall be a minimum of three years or 36,000 miles on entire vehicle ..... ☑ yes ☐ no

Bidder Comments:

Back to Agenda

Dump Body:

1. 108" Long x 89" wide x 15" sides x 21" gate ..... ☐ yes ☐ no
2. Single underbody telescopic piston with sub frame 9 ton lift cap ..... ☐ yes ☐ no
3. Set of front and rear mud flaps ..... ☐ yes ☐ no
4. All lights and reflectors to meet DOT spec ..... ☐ yes ☐ no
5. 24" cab protector with window screen ..... ☐ yes ☐ no
6. Body to be painted Black ..... ☑ yes ☐ no
8. Rust Preventative treatment (Ziebart) ..... ☑ yes ☐ no

Bidder Comments:
BODY SPECKS PER BODY QUOTES FROM FAIRFIELD

Snowplow:

1. Fisher XV2 9'6" PC blade with Fish-Stik control ..... ☑ yes ☐ no
2. Fisher 9' Steel-caster 12V DC spreader with 4.5 cubic yard capacity ..... ☑ yes ☐ no

Bidder Comments: BODY SPECKS PER BODY QUOTES FROM FAIRFIELD

Back to Agenda

Dump Body:

1. 108" Long x 89" wide x 15" sides x 21" gate ..... ☐ yes ☐ no
2. Single underbody telescopic piston with sub frame 9 ton lift cap ..... ☐ yes ☐ no
3. Set of front and rear mud flaps ..... ☐ yes ☐ no
4. All lights and reflectors to meet DOT spec ..... ☐ yes ☐ no
5. 24" cab protector with window screen ..... ☐ yes ☐ no
6. Body to be painted Black ..... ☑ yes ☐ no
8. Rust Preventative treatment (Ziebart) ..... ☑ yes ☐ no

Bidder Comments:
BODY SPECKS PER BODY QUOTES FROM MESSER

Snowplow:

1. Fisher XV2 9'6" PC blade with Fish-Stik control ..... ☑ yes ☐ no
2. Fisher 9' Steel-caster 12V DC spreader with 4.5 cubic yard capacity ..... ☑ yes ☐ no

Bidder Comments: BODY SPECKS PER BODY QUOTES FROM MESSER

Back to Agenda

Messer Truck Equipment
170 WARREN AVE.

(207) 854-9751
Fax (207) 854-8042
www.messertruckequipment.com

Quote

Date	Quote #
9/7/2016	12946

Name / Address
STARKEY FORD, INC. P O BOX 37 YORK, ME 03909

Attention	Terms	Sales Representative	Acct. Rep	P.O. No.
Rob	Net 30	Bob Tardiff	225	

Description	Qty	U/M	Total
Town of York Parks & Recreation Bid 9' Galion Godwin 3 to 4 yd Dump Body Model 100USD9	1		20,136.00
Price Includes: Installation on 60" CA F-550 10 ga. floor and sides Half cab protector shield with screen window Double acting removable tailgate Full 9" rear bolster Sloped rub rail Fully welded construction Painted black Federal 108 lights Back-up alarm Rear mud flaps Galion Godwin 12 volt electric hydraulic powered subframe hoist with double acting high pressure cylinder 1/2" plate steel hitch with 2" receiver tube and 7 blade RV trailer plug and safety chain loops Fisher 9-1/2XV2PC complete plow assembly with Fisk-Stik controller installed Fisher 9' Steel-Caster spreader with 4.5 YD capacity installed			
Bidder Comment: Dump body has 18" sides and 24" ends (exceeds spec,OK'D by Ryan Coite)			

We propose to furnish material and labor, in accordance with the above specifications. All material is guaranteed to be as specified. All work is to be completed in a workmanlike manner according to standard practices. Any alteration or deviation from above specifications involving extra costs will be executed only upon written orders, and will become an extra charge over and above the quotation. All agreements contingent upon strikes, accidents, or delays beyond our control. Owner to carry fire, tornado, and other necessary insurance. Our workers are fully covered by worker's compensation insurance. Any applicable Federal Excise Tax is not included in the above quotation. Quote valid for 30 days from date of issue.

Sales Tax (5.5%)	$0.00
Total	$20,136.00

Acceptance of Proposal - Sign and Return _____

Back to Agenda

H. P. FAIRFIELD, LLC

142351

HP FAIRFIELD LLC

"MUNICIPAL SPECIALISTS"

PHONE: 207-885-4895 FAX:

http://www.hpfairfield.com

FROM:
Steve Holston
65 Pleasant Hill Road
Scarborough , ME 04074

QUOTED TO: York Parks And Rec

York , ME

ATTN:

DATE: September 7, 2016

CUSTOMER PHONE:

CUSTOMER FAX:

COMMENTS: For York Parks and Recreation

QTY	DESCRIPTION	PRICE	EXT. PRICE
1	RUGBY 9'7" LONG 3-4 YARD STEEL DUMP BODY, POWDER COATED BLACK, 17" HIGH SIDES, 23" HIGH GATE,UNDERBODY HOIST WITH 11.5 TON CAPACITY, SUBFRAME, 25" HIGH CABSHIELD WITH WINDOW SCREEN, FRONT AND REAR MUDFLAPS WITH ANTI SAIL BRACKETS, LIGHT KIT, ALL INSTALLED ON DUAL REAR WHEEL CHASSIS WITH 60" CA MEASUREMENT OPTION FOR PINTLE PLATE RECIEVER AND 7 PIN TRAILER PLUG INSTALL ADD $522	$7,193.00	$7,193.00
1	FISHER 9'6" XV2 PC BLADE(COMPLETE SETUP) INSTALLED ON CHASSIS WITH FISH STIK CONTROL	$5,697.00	$5,697.00
1	FISHER 9' STEELCASTER SS SPREADER WITH 4.5 YARD CAPACITY, 12V DC ELECTRIC DRIVE INSTALLED	$6,128.00	$6,128.00

SIGNED ACKNOWLEDGED

QUOTE TOTAL $19,018.00

Serving New England for over 60 Years

Back to Agenda

```
CNGP530                    VEHICLE ORDER CONFIRMATION          09/08/16 10:21:24
==> _________ ____________________________________                Dealer: F11552
                              2017 F-SERIES SD                      Page: 1 of 2
Order No: 9999    Priority: K4  Ord FIN: QK866  Order Type: 5B Price Level: 730
Ord PEP:  660A Cust/Flt Name: YORK PARKS RC       PO Number:
                      RETAIL                                   RETAIL
F5H  F550 4X4 CHAS/C $41570            90L  PWR EQUIP GROUP   $915
     145" WHEELBASE                         TELE TT MIR-PWR
J7   MAGNETIC                          18B  PLAT RUNNING BD    320
A    VNYL 40/20/40                          LESS TPMS
S    MEDIUM EARTH GR                        19500# GVWR PKG
660A PREF EQUIP PKG                    213  ELECTRONIC SOF     185
     .XL TRIM                          41H  ENG BLK HEATER      NC
572  .AIR CONDITIONER    NC            425  50 STATE EMISS      NC
     .AM/FM STER/CLK
99T  6.7L V8 DIESEL    8485           TOTAL BASE AND OPTIONS 56220
44W  6-SPEED AUTO        NC           TOTAL                  56220
TFB  .225 BSW AS 19.5                 *THIS IS NOT AN INVOICE*
X8L  4.88 LTD SLIP      360
41A  RAPID HEAT          NC           * MORE ORDER INFO NEXT PAGE *
68M  PAYLD PLUS UPGR   1155                          F8=Next
F1=Help                F2=Return to Order            F3/F12=Veh Ord Menu
F4=Submit              F5=Add to Library
S006 - MORE DATA IS AVAILABLE.                                        QC09116
fmcdealr@Rob-PC
Sep 8, 2016 10:21:28 AM
```

```
CNGP530                    VEHICLE ORDER CONFIRMATION          09/08/16 10:21:54
==> ________ ____________________________________                Dealer: F11552
                              2017 F-SERIES SD                      Page: 2 of 2
Order No: 9999    Priority: K4  Ord FIN: QK866  Order Type: 5B Price Level: 730
Ord PEP:  660A Cust/Flt Name: YORK PARKS RC       PO Number:
                      RETAIL                                  RETAIL
473  SNOW PLOW PKG      $85          TOTAL BASE AND OPTIONS$56220
512  SPARE TIRE/WHL2    350          TOTAL                   56220
52B  BRAKE CONTROLLR    270          *THIS IS NOT AN INVOICE*
535  HI CAP TRLR TOW   1080
61J  JACK                NC
63B  CLN IDLE DECAL      NC
65Z  AFT AXLE TANK       NC
67B  DUAL XTR HD ALT     NC
98R  MANUAL REGEN       250
     SP DLR ACCT ADJ
     SP FLT ACCT CR
     FUEL CHARGE
B4A  NET INV FLT OPT     NC
     DEST AND DELIV    1195
                                                  F7=Prev
F1=Help                F2=Return to Order         F3/F12=Veh Ord Menu
F4=Submit              F5=Add to Library
S099 - PRESS F4 TO SUBMIT                                          QC09116
fmcdealr@Rob-PC
Sep 8, 2016 10:21:57 AM
```

ARUNDEL FORD

207-985-7171

800-889-7171

FAX 207-985-7173

1561 PORTLAND RD

U.S. ROUTE 1

ARUNDEL, ME 04046

September 7, 2016

Town of York Parts and Recreation

Ryan Coite

Our bid for one F550 1 and 1/2 ton diesel per your specs is $63648.00. Please see attached list of equipment. Any questions please call me at 207-985-7173.

Thank You,

Rodney Brackett

Fleet Manager

Arundel Ford

1561 Portland Rd

Arundel ME 04046

BlueOval Certified

Back to Agenda

Truck Specifications

Models:

1. Ford F-550XL 4x4 Regular Cab Dual Rear Wheel Chassis ..... ☒ yes ☐ no

Bidder Comments: _____

_____

_____

Engine:

1. Ford: 6.7L Power Stroke V8 Turbo Diesel ..... ☒ yes ☐ no

Bidder Comments: _____

_____

_____

G.V.W.R.:

1. Not Less Than 19,500lbs. ..... ☒ yes ☐ no

Bidder Comments: _____

_____

_____

Transmission:

1. Six speed automatic transmission with external filter ..... ☒ yes ☐ no
2. Selectable tow/haul switch ..... ☒ yes ☐ no
3. Heavy-duty transmission cooler ..... ☒ yes ☐ no
4. Electric 4wd shift on dash ..... ☒ yes ☐ no

Bidder Comments: _____

_____

_____

Back to Agenda

Wheelbase:

1. 60" cab to axle ..... ☑ yes ☐ no
2. 145" wheelbase ..... ☑ yes ☐ no

Bidder Comments: _____

Axles:

1. 4.88axle ratio, limited slip ..... ☐ yes ☑ no
2. Heaviest front and rear axle and spring combination for dump body and snowplow applications ..... ☑ yes ☐ no
3. Heavy-duty shocks ..... ☑ yes ☐ no

Bidder Comments: _____

Electrical:

1. Highest output 12-volt alternator ..... ☑ yes ☐ no
2. Dual heavy-duty batteries ..... ☑ yes ☐ no

Bidder Comments: _____

Color:

1. Metallic Grey ..... ☐ yes ☐ no

Bidder Comments: SILVER IS THE CLOSET

Interior:

1. High output heater/defroster with air conditioning ..... ☑ yes ☐ no
2. Full vinyl/rubber floor covering ..... ☑ yes ☐ no
3. AM/FM radio/clock ..... ☑ yes ☐ no
4. Tinted safety glass ..... ☑ yes ☐ no
5. Vinyl 40/20/40 split bench seat ..... ☑ yes ☐ no
6. Intermittent wipers with washer ..... ☑ yes ☐ no
7. Full gauge package ..... ☑ yes ☐ no
8. Integrated trailer brake controller ..... ☑ yes ☐ no
9. Operator commanded regeneration ..... ☑ yes ☐ no

Back to Agenda

Bidder Comments:_____

Exterior:

1. Power Equipment Group Package ..... ☑ yes ☐ no
2. Largest single fuel tank offered ..... ☑ yes ☐ no
3. Snowplow prep package ..... ☑ yes ☐ no
4. High capacity trailer tow package ..... ☑ yes ☐ no
5. Molded cab steps ..... ☑ yes ☐ no
6. Engine block heater ..... ☑ yes ☐ no
7. Rust Preventative Treatment (Ziebart) ..... ☐ yes ☒ no

Bidder Comments:_____

Tires:

1. 5-LT225/70Rx19.5G All Season ..... ☒ yes ☐ no

Bidder Comments:_____

Warranty:

1. Manufacturer's warranty shall be a minimum of three years or 36,000 miles on entire vehicle ..... ☑ yes ☐ no

Bidder Comments:

Back to Agenda

SEE LIST OF BODY

Dump Body:

1. 108" Long x 89" wide x 15" sides x 21" gate ..... ☐yes ☐no
2. Single underbody telescopic piston with sub frame 9 ton lift cap..... ☐yes ☐no
3. Set of front and rear mud flaps ..... ☐yes ☐no
4. All lights and reflectors to meet DOT spec ..... ☐yes ☐no
5. 24" cab protector with window screen ..... ☐yes ☐no
6. Body to be painted Black..... ☐yes ☐no
8. Rust Preventative treatment (Ziebart) ..... ☐yes ☐no

Bidder Comments:

_____

_____

Snowplow:

5450 1. Fisher XV2 9'6" PC blade with Fish-Stik control..... ☒yes ☐no

6250 2. Fisher 9' Steel-caster 12V DC spreader with 4.5 cubic yard capacity ..... ☒yes ☐no

Bidder Comments:_____

_____

_____

Back to Agenda

Teclee el codigo de la aplicacion -- y presione "ENTER"
Type the Application Letter -- then press "ENTER" a

CNGP530 VEHICLE ORDER CONFIRMATION 09/07/16 13:41:46
Dealer: F11556
==> Page: 1 of 2

2017 F-SERIES SD

Order No: 0000 Priority: K4 Ord FIN: QK866 Order Type: 5B Price Level: 730
Ord PEP: 660A Cust/Flt Name: YORK PO Number:

		RETAIL
F5H	F550 4X4 CHAS/C	$41570
	145" WHEELBASE	
UX	INGOT SILVER	
A	VNYL 40/20/40	
S	MEDIUM EARTH GR	
660A	PREF EQUIP PKG	
	.XL TRIM	
572	.AIR CONDITIONER	NC
	.AM/FM STER/CLK	
99T	6.7L V8 DIESEL	8485
44W	6-SPEED AUTO	NC
TFB	.225 BSW AS 19.5	
X8L	4.88 LTD SLIP	360
41A	RAPID HEAT	NC
68M	PAYLD PLUS UPGR	1155
90L	PWR EQUIP GROUP	$915
	TELE TT MIR-PWR	
18B	PLAT RUNNING BD	320
	LESS TPMS	
	19500# GVWR PKG	
213	ELECTRONIC SOF	185
41H	ENG BLK HEATER	NC

TOTAL BASE AND OPTIONS 56220
TOTAL 56220
THIS IS NOT AN INVOICE
*TOTAL PRICE EXCLUDES COMP PR

* MORE ORDER INFO NEXT PAGE *
F8=Next

Back to Agenda

CNGP530 VEHICLE ORDER CONFIRMATION 09/07/16 13:42:13
Dealer: F11556
==> Page: 2 of 2

2017 F-SERIES SD

Order No: 0000 Priority: K4 Ord FIN: QK866 Order Type: 5B Price Level: 730
Ord PEP: 660A Cust/Flt Name: YORK PO Number:

		RETAIL
425	50 STATE EMISS	NC
473	SNOW PLOW PKG	85
512	SPARE TIRE/WHL2	350
52B	BRAKE CONTROLLR	270
535	HI CAP TRLR TOW	1080
61J	JACK	NC
63B	CLN IDLE DECAL	NC
65Z	AFT AXLE TANK	NC
67B	DUAL XTR HD ALT	NC
794	PRICE CONCESSN	
	REMARKS TRAILER	
98R	MANUAL REGEN	250
	SP FLT ACCT CR	
	FUEL CHARGE	
	DEST AND DELIV	1195

	RETAIL
TOTAL BASE AND OPTIONS	56220
TOTAL	56220

THIS IS NOT AN INVOICE
*TOTAL PRICE EXCLUDES COMP PR

F1=Help F2=Return to Order F7=Prev
F4=Submit F5=Add to Library F3/F12=Veh Ord Menu
F9=View Trailers
QC01626
S099 - PRESS F4 TO SUBMIT

Back to Agenda

170 WARREN AVE.

MESSER
Truck Equipment

(207) 854-9751
Fax (207) 854-8042
www.messertruckequipment.com

Date	Quote #
9/7/2016	12945

Name / Address
ARUNDEL FORD 1516 PORTLAND RD. ARUNDEL, ME 04046

Attention	Terms	Sales Representative	Acct. Rep	P.O. No.
Rod	Net 30	Bob Tardiff	225	

Description	Qty	U/M	Total
Town of York Parks & Recreation Bid 9' Galion Godwin 3 to 4 yd Dump Body Model 100USD9 Price Includes: Installation on 60" CA F-550 10 ga. floor and sides Half cab protector shield with screen window Double acting removable tailgate Full 9" rear bolster Sloped rub rail Fully welded construction Painted black Federal 108 lights Back-up alarm Rear mud flaps Galion Godwin 12 volt electric hydraulic powered subframe hoist with double acting high pressure cylinder 1/2" plate steel hitch with 2" receiver tube and 7 blade RV trailer plug and safety chain loops Bidder Comment: Dump body has 18" sides and 24" ends (exceeds spec,OK'D by Ryan Coite)	1		8,425.00

We propose to furnish material and labor, in accordance with the above specifications. All material is guaranteed to be as specified. All work is to be completed in a workmanlike manner according to standard practices. Any alteration or deviation from above specifications involving extra costs will be executed only upon written orders, and will become an extra charge over and above the quotation. All agreements contingent upon strikes, accidents, or delays beyond our control. Owner to carry fire, tornado, and other necessary insurance. Our workers are fully covered by worker's compensation insurance. Any applicable Federal Excise Tax is not included in the above quotation. Quote valid for 30 days from date of issue.

Sales Tax (0.0%)	$0.00
Total	$8,425.00

Acceptance of Proposal - Sign and Return _____

Back to Agenda

TOWN OF YORK
PARKS & RECREATION

TOWN OF YORK

BID PRICE FORM

NEW 1 and ½ Ton Diesel Dump Truck Package

BID SUBMISSION DATE:
BID SUBMISSION DEADLINE: 9/15/2016 at 12:00pm
BID OPENING DATE:9/15/2016
BID OPENING TIME: Approximately 12:30pm
BID OPEN LOCATION: York Town Hall

Proposer herby offers to provide the equipment described in the applicable specifications.

A. Name of Company submitting proposal: Rowe Ford of Westbrook

Address: 91 Main Street Westbrook, ME 04092

Telephone: 207-854-2555

B. Provide one (1) new 1 and ½ ton Diesel 4x4 truck

Manufacturer: Ford

Year /Model: 2017 F-550 XL

Back to Agenda

C. Summary of Total Costs to Town of York as Follows:

Total for one (1) 1 and ½ Ton Diesel 4x4 dump truck package: including dump body, plow and spreader.

$62,744.00 (H.P. Fairfield)

Total Net Cost to Town (in numerals) $ 63,340.00 (Messer)

Total Net Cost to Town (in words):

Sixty-two thousand seven hundred forty four dollars and zero cents (Fairfield)
Sixty three thousand three hundred forty dollars and zero cents (Messer)

D. Approximate delivery Date: 12-14 weeks Cab and Chasis to dealer

*** Due to varying factors of upfitters, Rowe Ford is not responsible for the delivery time once upfitter receives vehicle from Rowe Ford.

E. Name of Company Representative Authorized to Submit Proposals:

Name: Robert Whiting

Title: Commercial Sales Manager

Date: September 14, 2016

Signature:

Return sealed bids to: Town Manager's Office
Town of York
186 York Street
York, Maine 03909

Clearly Mark Envelope: "**PROPOSALS ON 4WD 1 and ½ Ton Diesel 4x4 truck package**".

* Trade Value $6,025.00
2006 Chevy Silverado 3500
8.5 ft Fisher Minute Mount
1.5 yd. Electric Spreader

Back to Agenda

H. P. FAIRFIELD, LLC

142351

HP FAIRFIELD LLC

"MUNICIPAL SPECIALISTS"

PHONE: 207-885-4895 FAX:

http://www.hpfairfield.com

FROM:

Steve Holston
65 Pleasant Hill Road
Scarborough , ME 04074

QUOTED TO: Rowe Ford

Westbrook , ME

ATTN: Greg West

DATE: September 7, 2016

CUSTOMER PHONE: 2078542555

CUSTOMER FAX:

COMMENTS: For York Parks and Recreation

QTY	DESCRIPTION	PRICE	EXT. PRICE
1	RUGBY 9'7" LONG 3-4 YARD STEEL DUMP BODY, POWDER COATED BLACK, 17" HIGH SIDES, 23" HIGH GATE,UNDERBODY HOIST WITH 11.5 TON CAPACITY, SUBFRAME, 25" HIGH CABSHIELD WITH WINDOW SCREEN, FRONT AND REAR MUDFLAPS WITH ANTI SAIL BRACKETS, LIGHT KIT, ALL INSTALLED ON DUAL REAR WHEEL CHASSIS WITH 60" CA MEASUREMENT OPTION FOR PINTLE PLATE RECIEVER AND 7 PIN TRAILER PLUG INSTALL ADD $522	$7,193.00	$7,193.00
1	FISHER 9'6" XV2 PC BLADE(COMPLETE SETUP) INSTALLED ON CHASSIS WITH FISH STIK CONTROL	$5,697.00	$5,697.00
1	FISHER 9' STEELCASTER SS SPREADER WITH 4.5 YARD CAPACITY, 12V DC ELECTRIC DRIVE INSTALLED	$6,128.00	$6,128.00

SIGNED **ACKNOWLEDGED**

QUOTE TOTAL $19,018.00

Serving New England for over 60 Years

Back to Agenda

Messer Truck Equipment
170 WARREN AVE.

(207) 854-9751
Fax (207) 854-8042
www.messertruckequipment.com

Quote

Date	Quote #
9/7/2016	12944

Name / Address
ROWE FORD HYUNDAI P O BOX 109 WESTBROOK, ME 04098

Attention	Terms	Sales Representative	Acct. Rep	P.O. No.
Bob	Net 30	Stewart	225	

Description	Qty	U/M	Total
Town of York Parks & Recreation Bid 9' Galion Godwin 3 to 4 yd Dump Body Model 100USD9 Price Includes: Installation on 60" CA F-550 10 ga. floor and sides Half cab protector shield with screen window Double acting removable tailgate Full 9" rear bolster Sloped rub rail Fully welded construction Painted black Federal 108 lights Back-up alarm Rear mud flaps Galion Godwin 12 volt electric hydraulic powered subframe hoist with double acting high pressure cylinder 1/2" plate steel hitch with 2" receiver tube and 7 blade RV trailer plug and safety chain loops Fisher 9-1/2XV2PC complete plow assembly with Fisk-Stik controller installed Fisher 9' Steel-Caster spreader with 4.5 YD capacity installed Bidder Comment: Dump body has 18" sides and 24" ends (exceeds spec,OK'D by Ryan Coite)	1		20,136.00

We propose to furnish material and labor, in accordance with the above specifications. All material is guaranteed to be as specified. All work is to be completed in a workmanlike manner according to standard practices. Any alteration or deviation from above specifications involving extra costs will be executed only upon written orders, and will become an extra charge over and above the quotation. All agreements contingent upon strikes, accidents, or delays beyond our control. Owner to carry fire, tornado, and other necessary insurance. Our workers are fully covered by worker's compensation insurance. Any applicable Federal Excise Tax is not included in the above quotation. Quote valid for 30 days from date of issue.

Sales Tax (5.5%)	$0.00
Total	$20,136.00

Acceptance of Proposal - Sign and Return _____

Back to Agenda

Truck Specifications

Models:

1. Ford F-550XL 4x4 Regular Cab Dual Rear Wheel Chassis ..... ☒ yes ☐ no

Bidder Comments: _____

_____

_____

Engine:

1. Ford: 6.7L Power Stroke V8 Turbo Diesel ..... ☒ yes ☐ no

Bidder Comments: _____

_____

_____

G.V.W.R.:

1. Not Less Than 19,500lbs. ..... ☒ yes ☐ no

Bidder Comments: _____

_____

_____

Transmission:

1. Six speed automatic transmission with external filter ..... ☒ yes ☐ no
2. Selectable tow/haul switch ..... ☒ yes ☐ no
3. Heavy-duty transmission cooler ..... ☒ yes ☐ no
4. Electric 4wd shift on dash ..... ☒ yes ☐ no

Bidder Comments: _____

_____

_____

Back to Agenda

Wheelbase:

1. 60" cab to axle ..... ☒yes ☐no
2. 145" wheelbase ..... ☒yes ☐no

Bidder Comments:_____

Axles:

1. 4.88axle ratio, limited slip ..... ☒yes ☐no
2. Heaviest front and rear axle and spring combination for dump body and snowplow applications ..... ☒yes ☐no
3. Heavy-duty shocks ..... ☒yes ☐no

Bidder Comments:_____

Electrical:

1. Highest output 12-volt alternator ..... ☒yes ☐no
2. Dual heavy-duty batteries ..... ☒yes ☐no

Bidder Comments:_____

Color:

1. Metallic Grey ..... ☒yes ☐no

Bidder Comments:_____

Interior:

1. High output heater/defroster with air conditioning ..... ☒yes ☐no
2. Full vinyl/rubber floor covering ..... ☒yes ☐no
3. AM/FM radio/clock ..... ☒yes ☐no
4. Tinted safety glass ..... ☒yes ☐no
5. Vinyl 40/20/40 split bench seat ..... ☒yes ☐no
6. Intermittent wipers with washer ..... ☒yes ☐no
7. Full gauge package ..... ☒yes ☐no
8. Integrated trailer brake controller ..... ☒yes ☐no
9. Operator commanded regeneration ..... ☒yes ☐no

Back to Agenda

Bidder Comments:_____

Exterior:

1. Power Equipment Group Package ..... ☒ yes ☐ no
2. Largest single fuel tank offered ..... ☒ yes ☐ no
3. Snowplow prep package ..... ☒ yes ☐ no
4. High capacity trailer tow package ..... ☒ yes ☐ no
5. Molded cab steps ..... ☒ yes ☐ no
6. Engine block heater ..... ☒ yes ☐ no
7. Rust Preventative Treatment (Ziebart) ~~$475.00~~ included in pricing ..... ☒ yes ☐ no

Bidder Comments: Rust proofing is Value Guard - a Ford approved undercoating product

Tires:

1. 5-LT225/70Rx19.5G All Season ..... ☒ yes ☐ no

Bidder Comments:_____

Warranty:

1. Manufacturer's warranty shall be a minimum of three years or 36,000 miles on entire vehicle ..... ☒ yes ☐ no

Bidder Comments:

Back to Agenda

Dump Body:

1. 108" Long x 89" wide x 15" sides x 21" gate ..... ☒ yes ☐ no
2. Single underbody telescopic piston with sub frame 9 ton lift cap ..... ☒ yes ☐ no
3. Set of front and rear mud flaps ..... ☒ yes ☐ no
4. All lights and reflectors to meet DOT spec ..... ☒ yes ☐ no
5. 24" cab protector with window screen..... ☒ yes ☐ no
6. Body to be painted Black..... ☒ yes ☐ no
8. Rust Preventative treatment (Ziebart) ..... ☒ yes ☐ no

Bidder Comments:
See attached quotes from Messer and HP Fairfield

Snowplow:

1. Fisher XV2 9'6" PC blade with Fish-Stik control ..... ☒ yes ☐ no
2. Fisher 9' Steel-caster 12V DC spreader with 4.5 cubic yard capacity ..... ☒ yes ☐ no

Bidder Comments: See attached quotes from Messer and HP Fairfield

Back to Agenda

REQUEST FOR ACTION BY BOARD OF SELECTMEN

DATE SUBMITTED: September 29, 2016	☒ ACTION
DATE ACTION REQUESTED: October 3, 2016	☐ DISCUSSION ONLY
SUBJECT: Award of Radio Equipment Bid	

DISCUSSION OF OPTIONS AVAILABLE TO THE BOARD:

see attached memo

RECOMMENDATION: : I recommend that the bid be awarded to Two Way Communications Inc. to purchase a 120′ radio tower and equipment necessary to integrate it into our new radio system.

PROPOSED MOTION: I move to award the bid for radio equipment to Two Way Radio Communications Inc. in the amount of $77,043.56

FISCAL IMPACT: $77,043.56	
DEPARTMENT LINE ITEM ACCOUNT: TBD	
BALANCE IN LINE ITEM IF APPROVED:	

PREPARED BY: Chief Douglas P. Bracy REVIEWED BY: _____

Back to Agenda

TOWN OF YORK, MAINE
Police Department

Douglas P. Bracy
Chief of Police

Mailing Address:
36 Main Street
York, Maine 03909

Dispatch:
Non-Emergency
(207) 363-4444

Administration:
(207) 363-1031

Facsimile:
(207) 361-6818

www.yorkpolice.org

Committed to excellence

MEMORANDUM

DATE: September 29, 2016

TO: Town Manager Stephen Burns

CC: Board of Selectmen

FROM: Chief Douglas Bracy DPB

SUBJECT: AWARD OF TOWER BID

As the new police station project moves along it is now necessary to provide the radio tower and equipment that will integrate this facility for our dispatch center. I have worked with our radio vendor Two Way Communication Inc. to design an up to date progressive system that will enable us to have a state of the art radio system that has redundancies built in to safeguard the operation if any one component is lost. The cost for the system are established through Motorola on a state contract bid process. I would ask the Board to sole source this project to Two Way Communications Inc. as they have been our reliable vendor for nearly 35 years and have a proven track record of quality work and fair pricing. I would also recommend the Motorola brand as their reliability, durability, and costs have been solid for 35 years.

The features of the new system require us to have as tower at the new police station facility capable of being able to stand alone if necessary. This plan has been reviewed and included as part of the police station project from the beginning so it has all approvals necessary.

The proposed tower will be 120 feet high and positioned to the rear of the new building for aesthetics. This week as concrete work began on the addition it was discovered that we have to order the tower ASAP in order

Back to Agenda

to have the base of the structure available to be welded to the footing rebar before pouring concrete for the upper base to the tower. The tower we used at the old PD only required anchor bolts. This fact necessitates us moving forward with purchase of the tower quickly to insure we do not slow the progress of the contractor on the project. If approved the tower components would be shipped October 5th.

I have attached the information for the tower and project cost sheet with this package. I would like the Board's approval to pay for components of the project as they come forward from Two Way.

Back to Agenda

2-Way Communications Service, Inc. **Project Budget Worksheet**

TOWN OF YORK - DISPATCH CENTER AND LMR NETWORK

TOWER, ANTENNA SYSTEMS, RADIO ROOM

Nomenclature	Qty	Description	Unit Price	Extended
		TOWER		
529309	1	SuperTitan Weld 120ft W300 Self-Supporting Tower	$24,632.16	$24,632.16
433866	6	72" Heavy Duty Stand-Off Bracket	$381.28	$2,287.68
439081	40	1/2" Snap-In Hanger Kit	$17.90	$716.00
417125	7	Support/Hoist Grip 1/2 superflex	$17.35	$121.45
425864	8	Pipe to Pipe Clamp, Heavy Duty	$54.40	$435.20
				$0.00
		ANTENNA SYSTEMS		$0.00
79492	1	150-157 MHz 6dB Fiberglass Omni Antenna	$1,512.50	$1,512.50
37510	5	148-174 MHz 2.5dB Fiberglass Omni Antenna	$865.70	$4,328.50
325650	1	380-470 MHz 2.5dB Fiberglass Collinear Antenna	$684.20	$684.20
86672	1000	LMR-600 1/2" Foam Cable	$2.00	$2,000.00
59520	160	3/8" LMR400 Coaxial Cable	$1.10	$176.00
423509	1	2-3/8" OD x 96" Long - Plain End Pipe	$66.19	$66.19
591953	7	LMR-600 Male Boot for N, TNC, BNC, 4.3-10, 4.1-9.5	$12.00	$84.00
553048	14	LMR-400 Female Boot for N, TNC,BNC,4.3-10, 4.1-9.5	$12.00	$168.00
553046	7	Antenna Port O-Ring IP Boot for type N-Female	$4.00	$28.00
348407	28	Captivated N Plug (M) for 400 Cable - Hex	$9.02	$252.56
501728	7	N Female crimp connector for LMR600 non solder pin	$20.00	$140.00
511312	7	N Male Crimp for LMR-600-LLPL, No Braid Trim	$20.30	$142.10
DSCS0496040531	1	SHORT HAUL CONTROL STATION COMBINER, 40-960 MHZ 4 CH.	$2,159.00	$2,159.00
33532	1	EMR Corporation - 138-225MHz Multicoupler, 8 Channel	$2,450.00	$2,450.00
		EARTH GROUNDING		
67471	14	5' Clip-on Ground Kit 1/2"	$18.20	$254.80
439195	200	Ground Wire, #2 AWG Solid Tinned (bare)	$2.95	$590.00
442416	1	Universal Tower Ground Bar Mounting Hardware	$12.55	$12.55
415562	1	1/4"x2"x14" Ground Bar, No Hdwr	$39.40	$39.40
414017	5	5/8" X 8' Ground Rod	$22.35	$111.75
497351	40	#2 7-Str Green Insul Wire	$4.50	$180.00
		ICE BRIDGE AND ENTRY PANNEL		
445800	2	Two Post Saftey Grated Bridge Kit, Burial Posts	$589.60	$1,179.20
378806	1	12 Port Protect Smart-Panel, N Hole	$2,195.00	$2,195.00
308628	5	Blank Hole Plug, N Type	$7.50	$37.50
526870	7	Bulkhead mount Arrestor, N/F	$72.00	$504.00
		EQUIPMENT CABINETS (RADIO ROOM)		
541901	2	42U SmartRack Shallow Depth Premium Enclosure	$1,834.20	$3,668.40
411166	4	Rack Powerstrip, 6 Rear Outlets	$80.80	$323.20
513073	2	Power Supply, 30AM, w/ Rack Mount	$227.10	$454.20
321442	2	Switching Pwr Supply, 30AM	$169.10	$338.20
500462	2	Smart-UPS X 3000VA Rack/Tower 100-127V, 2700W	$2,000.00	$4,000.00
65079	1	10' X 6" Cable Ladder, Gray	$100.92	$100.92
79693	1	End Support Kits	$35.00	$35.00
443818	2	1/4" x 5/8" x 72" Vertical Mount Ground Bar	$117.95	$235.90
		INTEGRATION		
MISC	1	Installation materials, hardware, misc.	$800.00	$800.00
CRANE	1	Professional crane services, 120' structure	$2,800.00	$2,800.00
CLMB	1	Professional tower climbing services, insurances, safety crew	$7,200.00	$7,200.00
COMM	1	2-Way Communications Division Advanced Labor, R56 certified team	$9,600.00	$9,600.00
		TOWER, ANTENNA SYSTEMS, RADIO ROOM	Total	$77,043.56

Back to Agenda

PROJECT SCOPE:

THE PROPOSED PROJECT INVOLVES THE REFURBISHING OF THE EXISTING FUNCTION FACILITY TO THE TOWN OF YORK POLICE STATION. THE ADDITION OF 1,100 NEW FT. SQ. STS. AS ANNUALLY AS POSSIBLE, WITH CHANGES DONE MORE ONLY WHERE NECESSARY TO IMPROVE THE FUNCTIONALITY AND SAFETY OF THE PROPOSED FACILITY. THE WORK WILL BE COMPRISED OF THE FOLLOWING ITEMS:

1. REMOVAL OF PORTIONS EXISTING PAVED WALKWAYS AND ACCESSORY STRUCTURES THAT WILL NOT BE REUSED IN THE NEW SITE.
2. REDESIGNING THE EXISTING LANDSCAPED ISLANDS TO ALLEVIATE PLOWING INTERSECTIONS AND IMPROVE TRAFFIC FLOW THROUGH THE SITE.
3. REPLACEMENT OF EXISTING LIGHTING AT THE LANDSCAPED ISLANDS AT THE PUBLIC PARKING AREA.
4. CONSTRUCTION OF A NEW BUILDING ADDITION AND ACCESSORY STRUCTURES RELATED TO ACCOMMODATE THE NEW USE, ALONG WITH INSTALLATION OF THE REQUIRED UTILITIES AND CONNECTIONS TO MUNICIPAL SERVICES.
5. INSTALLATION OF THE WEARING COURSE OF PAVEMENT THROUGHOUT AFTER ALL PORTIONS OF THE SITE HAVE BEEN STABILIZED.

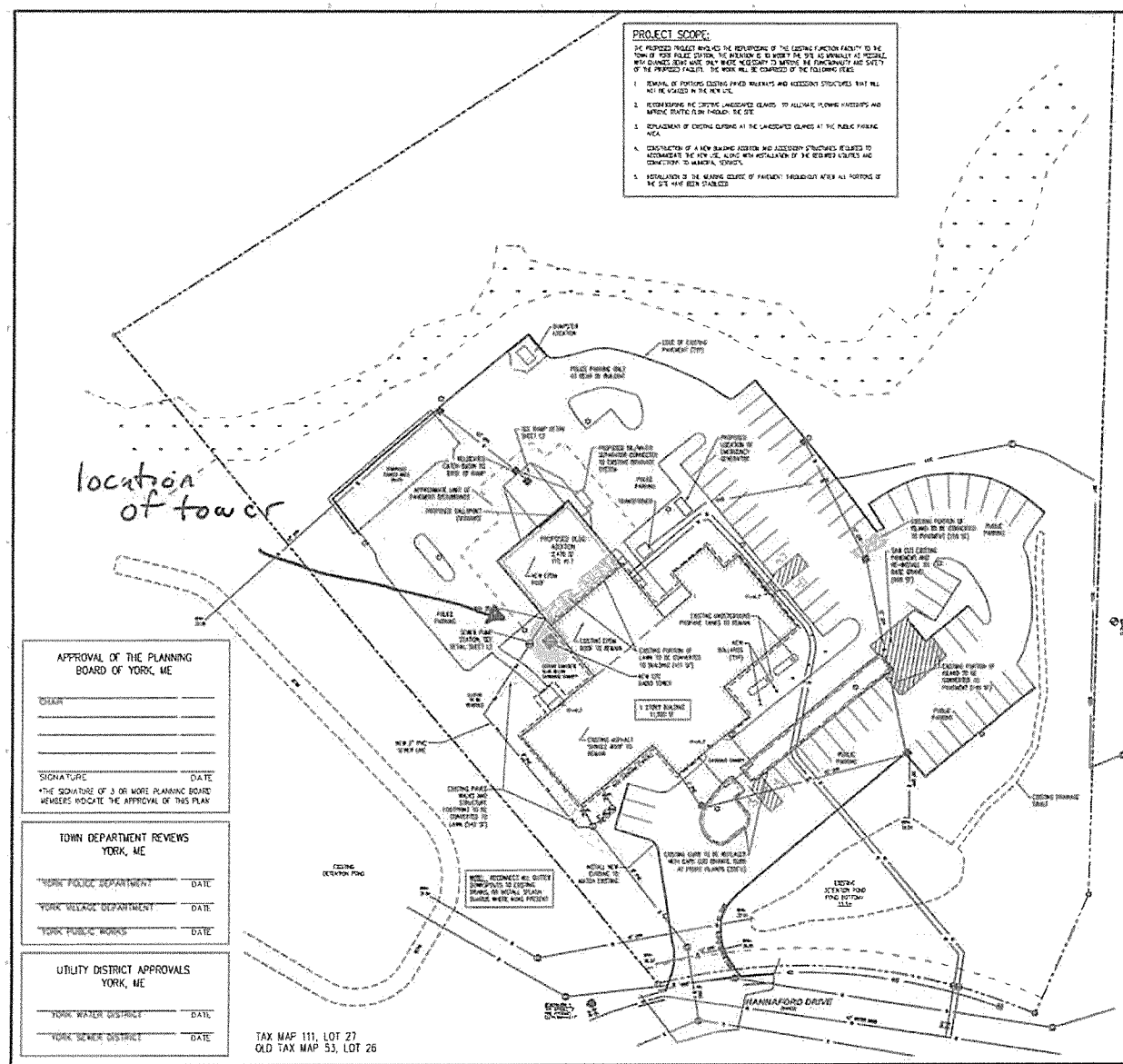

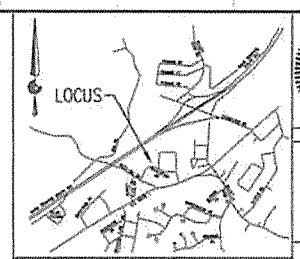

LOCATION PLAN
(NOT TO SCALE)

NOTES:

1. PLANIMETRIC DETAIL DEPICTED HEREON IS THE RESULT OF AN ON-THE-GROUND FIELD SURVEY BY CIVIL CONSULTANTS ON JUNE 7-9, 2015.
2. HORIZ. AS DEPICTED HEREON IS REFERENCED TO GRID NORTH, MAINE STATE PLANE COORDINATE SYSTEM WEST ZONE. [illegible]
3. ELEVATIONS DEPICTED HEREON ARE REFERENCED TO NAVD88, DERIVED FROM THE NGS REFERENCED GPS SURVEY. [illegible]
4. [illegible]
5. ADJACENT INFORMATION: TOWN OF YORK ASSESSORS MAP 111, LOT 27 (OLD TAX MAP 53, LOT 26)
6. [illegible]
7. UTILITY INFORMATION DEPICTED HEREON IS COMPILED FROM PHYSICAL EVIDENCE LOCATED IN THE FIELD. UTILITIES DEPICTED HEREON MAY NOT NECESSARILY REPRESENT ALL EXISTING UTILITIES. UNDERGROUND UTILITIES ARE BASED ON PLAN REFERENCE #1 AND PLAN REFERENCE #2. CONTRACTORS NEED TO CONTACT DIGSAFE AND FIELD VERIFY ALL EXISTING UTILITIES PRIOR TO CONSTRUCTION. WATER AND SEWER CONNECTIONS WERE NOT LOCATED.
8. THE EDGE OF WETLAND DEPICTED HEREON IS BASED ON FIELD LOCATION OF WETLAND DELINEATION FLAGS SET BY MICHAEL YOUNG, MAINE CONTROL SERVICES SEPTEMBER 2014.
9. THE LOCUS PARCEL IS LOCATED IN ZONE "X" ON THE NATIONAL FLOOD INSURANCE RATE MAP (FIRM) FOR THE TOWN OF YORK, MAINE, YORK COUNTY, COMMUNITY PANEL NUMBER 230168 0024 B, EFFECTIVE DATE JUNE 17, 2002. ZONE X IS DEFINED AS "AREAS DETERMINED TO BE OUTSIDE 500-YEAR FLOODPLAIN".
10. THE PARKLAND EQUIPMENT DEPICTED HEREON IS BASED ON REFERENCE PLANS 1 AND 2 AND FIELD LOCATION OF MONUMENTS SHOWN ON REFERENCE PLANS 1 AND 2. DATA RECEIVED HAS BEEN ADDED TO THE THE PERIOD JUNE, 2015 TO JUNE 5, 2015. CIVIL CONSULTANTS HAS NOT PERFORMED A COMPLETE EQUIPMENT REPLACEMENT SURVEY.
11. THE LOCUS PROPERTY IS SUBJECT TO CERTAIN COVENANTS AND RESTRICTIONS SET FORTH IN YCRD 14781/325.
12. REFERENCE IS MADE TO STATE OF MAINE DEPARTMENT OF ENVIRONMENTAL PROTECTION DEPARTMENT ORDER #L-19541-23-D-N, DATED JANUARY 30, 2001, RECORDED IN YCRD 15347/636.
13. THE LOCUS PROPERTY IS SUBJECT TO UTILITY EASEMENTS RECORDED IN YCRD 1030/[illegible] AND [illegible].

REFERENCE PLANS:

1. "SURVEY EXISTING CONDITIONS SURVEY OF LAND OF AMERICAN LEGION-RAMSDELL-ROGERS POST 56, 9 HANNAFORD DRIVE - TAX MAP 111, LOT 27, YORK, YORK COUNTY, MAINE", DATED JUNE 8, 2015, PREPARED BY CIVIL CONSULTANTS.
2. "FINAL SITE PLAN FOR RAMSDELL-ROGERS FUNCTION FACILITY AMERICAN LEGION POST 56 HANNAFORD DRIVE, YORK, MAINE", BY AMERICAN LIMNOLOGY COMPANIES, INC., DATED JUNE 2001, LAST REVISED 08/20/01 PLAN RECORDED AT THE YORK COUNTY REGISTRY OF DEEDS IN PLAN BOOK 335 PAGE 19.
3. "AS-BUILT PLAN FOR RAMSDELL-ROGERS FUNCTION FACILITY AMERICAN LEGION POST 56 HANNAFORD DRIVE YORK, MAINE" BY AMERICAN LIMNOLOGY COMPANIES, INC., DATED DECEMBER 19, 2002, LAST REVISED 10/21/03

IMPERVIOUS COVERAGE NOTES:

1. IMPERVIOUS COVERAGE ON THE LOT WAS RE-WORKED AS FOLLOWS:

REMOVED PAVEMENT/STRUCTURES:	-542 SF
CONVERTED LANDSCAPED ISLAND TO PAVEMENT:	+795 SF
NET CHANGE IN IMPERVIOUS COVERAGE:	+253 SF
LOT AREA:	250,160 SF
REMAINING TOTAL LOT IMPERVIOUS:	81,175 SF (32%) NO CHANGE FROM APPROVED
LAND NOT SUITABLE FOR DEVELOPMENT:	11,873 SF (NO SUPPLY STREET)
NET DEVELOPABLE AREA:	238,287 SF

LEGEND:

14/17/225	DEED BOOK/PAGE NUMBER
CONC	CONCRETE
BM	BENCHMARK
LPG	LIQUIDFIED PETROLEUM GAS
YCRD	YORK COUNTY REGISTRY OF DEEDS
X 71.47	FINISH FLOOR ELEVATION
	CATCH BASIN
	MANHOLE
	ELECTRIC MANHOLE
	SANITARY SEWER MANHOLE
	SURVEY BENCHMARK (SEE NOTES)
	EXISTING GRANITE OR CONCRETE BOUND (SEE NOTES)
	EXISTING IRON PIPE (SEE NOTES)
	EXISTING IRON ROD (SEE NOTES)
	WETLAND (SEE NOTE 8)
	LOCUS PARCEL BOUNDARY LINE (SEE NOTE 10)
	PROPOSED GRANITE CURB TO REPLACE BITUMINOUS
UGE	UNDERGROUND ELECTRIC (PLAN REFERENCE #1 & #2)
S	SANITARY SEWER (PLAN REFERENCE #1 & #2)
PS	PROPOSED SANITARY SEWER
W	WATER LINE (SEE PLAN REFERENCE #1 & #2)
D	DRAIN LINE (SEE PLAN REFERENCE #1 & #2)
	DRAIN MANHOLE (SEE PLAN REFERENCE #1 & #2)
	ELECTRIC PULL BOX (SEE PLAN REFERENCE #1 & #2)
	LIGHT POLE (SEE PLAN REFERENCE #1 & #2)

APPROVAL OF THE PLANNING BOARD OF YORK, ME

CHAIR

SIGNATURE DATE

*THE SIGNATURE OF 3 OR MORE PLANNING BOARD MEMBERS INDICATE THE APPROVAL OF THIS PLAN

TOWN DEPARTMENT REVIEWS YORK, ME

YORK POLICE DEPARTMENT DATE

YORK VILLAGE DEPARTMENT DATE

YORK PUBLIC WORKS DATE

UTILITY DISTRICT APPROVALS YORK, ME

YORK WATER DISTRICT DATE

YORK SEWER DISTRICT DATE

STATE OF MAINE — MICHAEL R. YOUNG — PROFESSIONAL ENGINEER

© 2014, CIVIL CONSULTANTS

CIVIL CONSULTANTS
Engineers
Planners
Surveyors
P.O. Box 910
South Berwick
Maine
03908
207-384-0188
www.civilcon.com

NO.	DATE	REVISIONS
1	3/31/16	ISSUED FOR REVIEW

PREPARED FOR: TOWN OF YORK, 186 YORK STREET, YORK, ME 03909

YORK POLICE STATION - SITE PLAN AMENDMENT
AMERICAN LEGION - RAMSDELL - ROGERS POST 56
9 HANNAFORD DRIVE - TAX MAP 111, LOT 27
YORK, YORK COUNTY, MAINE

PREPARED FOR: TOWN OF YORK
ATTN: ADDRESS: 186 YORK STREET, YORK, ME 03909

1" = 30'
0' 30'

DATE: 31 MARCH 2016
DRAWN BY: MPP/GEA
CHECKED BY: RJH
APPROVED BY: GEA

SITE PLAN AMENDMENT

PROJECT NO. 15-180.02

L-1

SHEET: 1 OF 2

COORDINATE FILE: Z:\AAA\2015\15180002\CARLSON\SURVEY\YORK15\180002.CRD

CADD FILE: Z:\AAA\2015\15180002\CARLSON\CNCR\DWG\15180002-S1-CONSTRUCTION.DWG

Back to Agenda

SUPER TITAN WELD

INSTALLATION MANUAL

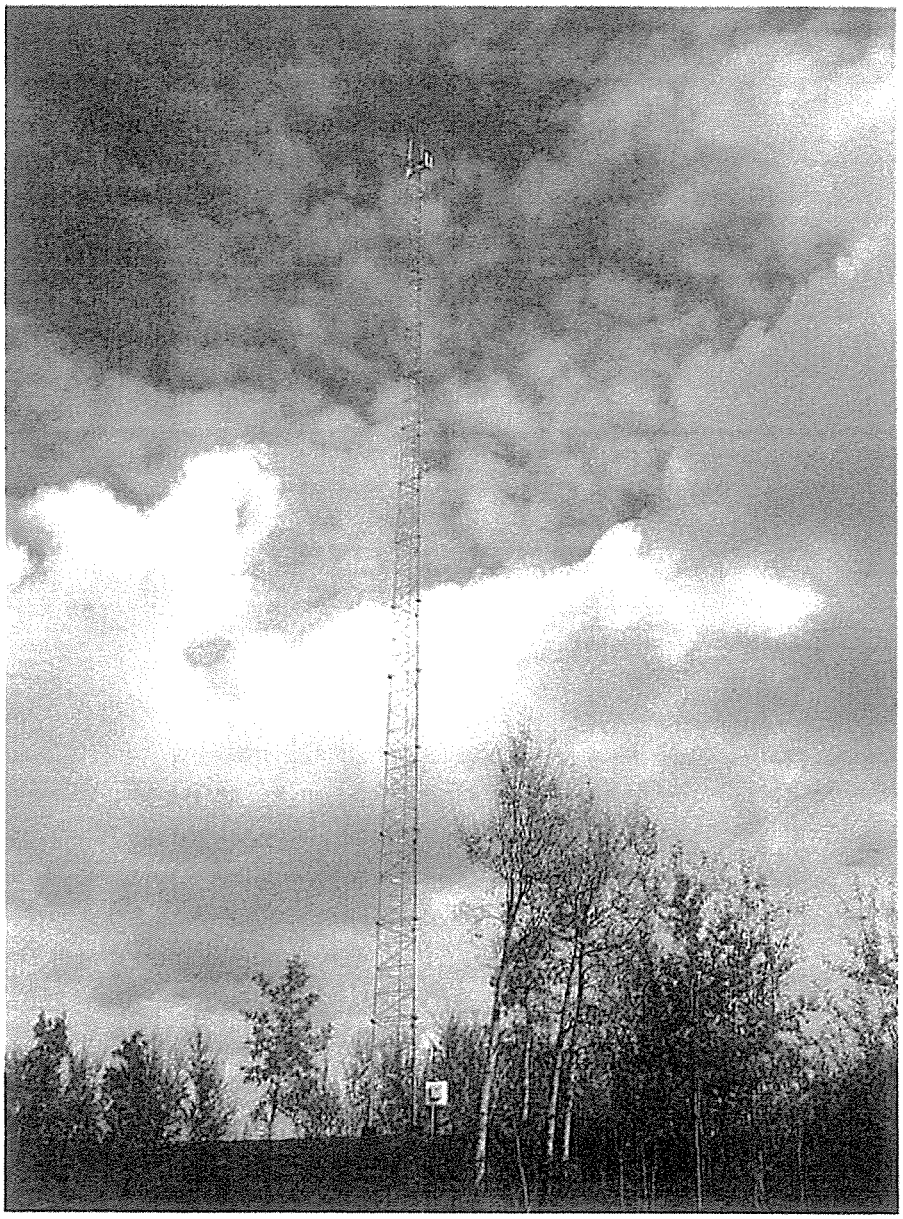

Trylon

Revision Date: June 2013

www.trylon.com

Back to Agenda

SECTION No.	10H	7H	4H
LEG	2-1/4"	2"	1-3/4"
DIAGONAL	7/8"	7/8"	3/4"
HORIZONTAL	3/4"	3/4"	3/4"
WEIGHT (lbs)	767.0	570.5	433.8
PART No.	3.010.0012.001	3.010.0016.001	3.010.0020.001

SECTION No.	15	14	13	12	11	10R	9	8	7R	6	5	4R	3	2	1
LEG	2-1/2"				2-1/4"	2"			1-3/4"			1-1/2"	1-1/4"	1"	
DIAGONAL	1"				7/8"				3/4"				5/8"		
HORIZONTAL	7/8"				3/4"										
WEIGHT (lbs)	1016.4	1000.9	948.3	833.5	779.5	680.1	608.1	580.8	493.0	456.1	442.7	366.2	300.5	206.3	214.5
PART No.	3.010.0007.001	3.010.0008.001	3.010.0009.001	3.010.0010.001	3.010.0011.001	3.010.0013.001	3.010.0014.001	3.010.0015.001	3.010.0017.001	3.010.0018.001	3.010.0019.001	3.010.0021.001	3.010.0022.001	3.010.0023.001	3.010.0024.001

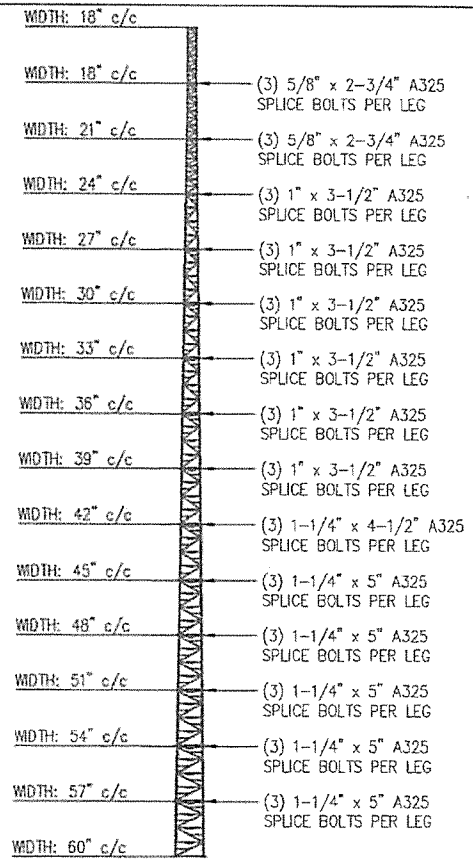

NOTES:

REV.	REV. BY:	CHK. BY:	DESCRIPTION	DATE

CONFIDENTIAL: ALL INTELLECTUAL PROPERTY RIGHTS HEREIN ARE THE PROPERTY OF TRYLON TSF Inc. ALL DUPLICATION, RECORDING, DISCLOSURE OR USE IS PROHIBITED WITHOUT WRITTEN CONSENT OF TRYLON TSF Inc.

Trylon

CUSTOMER:	SITE: AWSS	SCALE: 250.000
DATE: 06 FEB 12	BY: MAW	CHK: TLD	APP: JB
TITLE: TOWER PROFILE	DRAWING NO. 000001.010.0001	

Back to Agenda

Trylon

Instructions for Tightening of SuperTITAN A325 Grade Bolts Using Turn-of-the-Nut Method

23.5 Turn-of-Nut Tightening

23.5.1
After aligning the holes in a joint, sufficient bolts shall be placed and brought to a snug-tight condition to ensure that the parts of the joint are brought into full contact with each other. "Snug-tight" is the tightness attained by a few impacts of an impact wrench or the full effort of a person using a spud wrench.

23.5.2
Following the initial snugging operation, bolts shall be placed in any remaining open holes and brought to snug-tightness. Re-snugging may be necessary in large joints.

23.5.3
When all bolts are snug-tight, each bolt in the joint shall then be tightened additionally by the applicable amount of relative rotation given in Table 8, with tightening progressing systematically from the most rigid part of the joint to its free edges. During this operation there shall be no rotation of the part not turned by the wrench, unless the bolt and nut are match-marked to enable the amount of relative rotation to be determined.

Table 8
Nut Rotation* from Snug-Tight Condition

Disposition of outer faces of bolted parts	Bolt length ‡	Turn
Both faces normal bolt axis or one face normal to axis and other face sloped 1:20 max. (bevelled washer not used)†	Up to and including 4 diameters	1/3
	Over 4 diameters and not exceeding 8 diameters or 200 mm	1/2
	Exceeding 8 diameter or 200mm	2/3
Both faces sloped 1:20 max. from normal to bolt axis (bevelled washers not used)†	All lengths of bolts	3/4

**Nut rotation is rotation relative to a bolt regardless of whether the nut or bolt is turned. Tolerance on rotation: 30° over or under. This Table applies to coarse-thread heavy-hex structural bolts of all sizes and lengths used with heavy-hex semi-finished nuts.*
†Bevelled washers are necessary when A490M or A490 bolts are used.
‡Bolt length is measured from the underside of the head to the extreme end of point.

Bolt Diameter (Inch)	Bolt Length (inch)	Turns beyond snug tight
1/2	up to 2 inch	1/3
5/8	up to 2.5 inch	1/3
3/4	up to 3 inch	1/3
7/8	up to 3.5 inch	1/3
1	up to 4 inch	1/3

Bolt Diameter (Inch)	Bolt Length (inch)	Turns beyond snug tight
1/2	over 2 up to 4 Inch	1/2
5/8	over 2.5 up to 5	1/2
3/4	over 3 up to 6	1/2
7/8	over 3.5 up to 7	1/2
1	over 4 up to 8	1/2

Bolt Diameter (Inch)	Bolt Length (inch)	Turns beyond snug tight
1/2	over 4 inch	2/3
5/8	over 5	2/3
3/4	over 6	2/3
7/8	over 7	2/3
1	over 8	2/3

Back to Agenda

FOUNDATION NOTES:

GENERAL:

1) THE CONTRACTOR SHALL FIELD CHECK ALL DIMENSIONS AND DETAILS BEFORE PROCEEDING WITH THE WORK.
2) ALL WORKMANSHIP SHALL BE IN ACCORDANCE WITH THE LATEST ISSUE OF CSA STANDARDS.
3) FOUNDATIONS DESIGNED FOR NORMAL DRY SOIL CONDITIONS
4) NORMAL DRY SOIL CONDITIONS ARE ASSUMED AS FOLLOWS: ALLOWABLE BEARING CAPACITY 175 kpa kp = 3.0, ka = 0.33, ko = 0.5. THESE CONDITIONS SHOULD BE VERIFIED ON SITE BY A GEOTECHINCAL CONSULTANT WHEN THE BEARING SURFACE IS EXPOSED. NOTIFY ENGINEER IF SITE CONDITIONS DO NOT COMPLY WITH DESIGN CONDITIONS.
5) THE TOWER BASE PAD SHALL BE PLACED AGAINST UNDISTURBED SOIL.
6) ALL GALVANIZED STEEL IN CONTACT WITH SOIL IS TO BE COATED WITH ROOF PATCH.

CONCRETE:

1) CONCRETE CONSTRUCTION SHALL CONFORM TO THE REQUIREMENTS OF CSA STANDARD CAN3-A23.3-94.
2) CONCRETE SHALL HAVE A MINIMUM COMPRESSIVE STRENGTH AT 28 DAYS OF NOT LESS THAN 30 MPa.
3) CONCRETE SHALL CONTAIN AN AIR ENTRAINING AGENT. TOTAL AIR CONTENT TO BE 5% TO 7% AS SPECIFIED IN CSA STANDARD A23, FOR THE PARTICULAR SIZE OF AGGREGATE BEING USED. THE AIR ENTRAINING AGENT SHALL BE COMPATIBLE WITH THE WATER REDUCING AGENT.
4) THE MAXIMUM SIZE OF COARSE AGGREGATE SHALL BE 19 mm.
5) THE USE OF CALCIUM CHLORIDE OR ACCELERATING ADMIXTURES IS PROHIBITED.
6) SLUMP SHALL BE 75 mm +/- 25 mm.
7) IF THE AIR TEMPERATURE IS 5 DEGREES C OR LESS, THE TEMPERATURE OF THE CONCRETE AT TIME OF PLACING, SHALL BE BETWEEN 15 AND 30 DEGREES C.
8) CHAMFER EXPOSED CORNERS OF CONCRETE (APPROX 20 mm).
9) PROVIDE EFFECTIVE MEANS OF MAINTAINING THE TEMPERATURE OF CONCRETE IN PLACE AT A MINIMUM OF 10 DEGREES C AND A MAXIMUM OF 30 DEGREES C FOR THREE DAYS AFTER PLACING. WHEN THE MEAN DAILY AIR TEMPERATURE IS LESS THAN 5 DEGREES C PROVIDE PROTECTION FOR NEWLY PLACED CONCRETE BY MEANS OF SUITABLE ENCLOSURES OR RAISED COVERINGS, HEAT AND INSULATION.
10) ALL GROUT SHALL BE NON-FERROUS AND NON SHRINK WITH A MINIMUM COMPRESSIVE STRENGTH OF 48 MPa AT 28 DAYS, EDGES GROUT SHALL BE TAPERED OFF AT 45°.
11) ALL CONCRETE TO BE TYPE 10 NORMAL PORTLAND CEMENT.

REINFORCEMENT:

1) CLEAN REINFORCEMENT OF ANY LOOSE SCALE, DIRT OR OTHER COATINGS WHICH WOULD DESTROY OR REDUCE BONDING. REJECT BARS WITH KINKS OR BENDS NOT SHOWN ON FOUNDATION DETAILS.
2) ALL REINFORCEMENT SHALL HAVE A MINIMUM OF 75 mm CONCRETE COVER.
3) REINFORCING STEEL SHALL BE DEFORMED BARS CONFORMING WITH CSA STANDARD G30.18-M92 GR 400.

BACKFILLING:

1) BACKFILL SHALL BE PLACED IN THIN LIFTS (MAXIMUM 150 mm) AND COMPACTED TO A MINIMUM OF 95 PERCENT OF STANDARD PROCTOR MAXIMUM DRY DENSITY. IN THE EVENT THAT EXCAVATED MATERIALS ARE NOT SUITABLE FOR BACKFILL, IT SHALL BE THE RESPONSIBILITY OF THE CONTRACTOR TO SUPPLY AND COMPACT SUITABLE CLEAN MATERIAL TO MEET THAT REQUIREMENT.

STANDARDS:

1) FOUNDATIONS AND ANCHORS DESIGNED IN ACCORDANCE WITH CAN/CSA-S37-01.
2) CONCRETE WORK IN ACCORDANCE WITH CSA 23.1/23.2.
3) REINFORCEMENT FOR CONCRETE IN ACCORDANCE WITH CAN3-A23.1-94.

REV.	REV. BY:	CHK. BY:	DESCRIPTION	DATE

NOTES:

CONFIDENTIAL: ALL INTELLECTUAL PROPERTY RIGHTS HEREIN ARE THE PROPERTY OF TRYLON TSF Inc. ALL DUPLICATION, RECORDING, DISCLOSURE OR USE IS PROHIBITED WITHOUT WRITTEN CONSENT OF TRYLON TSF Inc.

Trylon

CUSTOMER:	SITE:		
STW		1.000	
DATE: 14 SEP 12	BY: MAW	CHK: TLD	APP: JB

TITLE: CSA FOUNDATION NOTES

DRAWING NO. 000001.906.0025

Back to Agenda

FOUNDATION NOTES:

GENERAL:

1) THE CONTRACTOR SHALL FIELD CHECK ALL DIMENSIONS AND DETAILS BEFORE PROCEEDING WITH THE WORK.
2) ALL WORKMANSHIP SHALL BE IN ACCORDANCE WITH THE LATEST ISSUE OF ACI STANDARDS.
3) FOUNDATIONS DESIGNED IN ACCORDANCE WITH EIA-222-F DEFINITION OF A NORMAL DRY SOIL HAVING AN ALLOWABLE BEARING CAPCITY OF 3500 PSF.
4) THE TOWER BASE PAD SHALL BE PLACED AGAINST UNDISTURBED SOIL.

CONCRETE:

1) CONCRETE CONSTRUCTION SHALL CONFORM TO THE REQUIREMENTS OF STANDARD ACI 318-95.
2) CONCRETE SHALL HAVE A MINIMUM COMPRESSIVE STRENGTH AT 28 DAYS OF NOT LESS THAN 4000 PSI.
3) CONCRETE SHALL CONTAIN AN AIR ENTRAINING AGENT. TOTAL AIR CONTENT TO BE 5% TO 7% , FOR THE PARTICULAR SIZE OF AGGREGATE BEING USED. THE AIR ENTRAINING AGENT SHALL BE COMPATIBLE WITH THE WATER REDUCING AGENT.
4) THE MAXIMUM SIZE OF COARSE AGGREGATE SHALL BE 3/4".
5) THE USE OF CALCIUM CHLORIDE OR ACCELERATING ADMIXTURES IS PROHIBITED.
6) SLUMP SHALL BE 3" +/- 1".
7) IF THE AIR TEMPERATURE IS 41 DEGREES F OR LESS, THE TEMPERATURE OF THE CONCRETE AT TIME OF PLACING, SHALL BE BETWEEN 59 AND 86 DEGREES F.
8) CHAMFER EXPOSED CORNERS OF CONCRETE (APPROX 3/4").
9) PROVIDE EFFECTIVE MEANS OF MAINTAINING THE TEMPERATURE OF CONCRETE IN PLACE AT A MINIMUM OF 50 DEGREES C AND A MAXIMUM OF 86 DEGREES F FOR THREE DAYS AFTER PLACING. WHEN THE MEAN DAILY AIR TEMPERATURE IS LESS THAN 41 DEGREES F PROVIDE PROTECTION FOR NEWLY PLACED CONCRETE BY MEANS OF SUITABLE ENCLOSURES OR RAISED COVERINGS, HEAT AND INSULATION.
10) ALL GROUT SHALL BE NON-FERROUS AND NON SHRINK WITH A MINIMUM COMPRESSIVE STRENGTH OF 5000 PSI AT 28 DAYS, EDGES GROUT SHALL BE TAPERED OFF AT 45°.
11) ALL CONCRETE TO BE TYPE 10 NORMAL PORTLAND CEMENT.

REINFORCEMENT:

1) CLEAN REINFORCEMENT OF ANY LOOSE SCALE, DIRT OR OTHER COATINGS WHICH WOULD DESTROY OR REDUCE BONDING. REJECT BARS WITH KINKS OR BENDS NOT SHOWN ON THIS DRAWING.
2) ALL REINFORCEMENT SHALL HAVE A MINIMUM OF 3" CONCRETE COVER.
3) REINFORCING STEEL SHALL BE DEFORMED BARS CONFORMING WITH ASTM A615 (GRADE 60)

BACKFILLING:

1) BACKFILL SHALL BE PLACED IN THIN LIFTS (MAXIMUM 6") AND COMPACTED TO A MINIMUM OF 95 PERCENT OF STANDARD PROCTOR MAXIMUM DRY DENSITY. IN THE EVENT THAT EXCAVATED MATERIALS ARE NOT SUITABLE FOR BACKFILL, IT SHALL BE THE RESPONSIBILITY OF THE CONTRACTOR TO SUPPLY AND COMPACT SUITABLE CLEAN MATERIAL TO MEET THAT REQUIREMENT.

STANDARDS:

1) FOUNDATIONS AND ANCHORS DESIGNED IN ACCORDANCE WITH EIA-222-F.
2) CONCRETE WORK IN ACCORDANCE WITH ACI 318-95.
3) REINFORCEMENT FOR CONCRETE IN ACCORDANCE WITH ACI 318-95.

REV.	REV. BY:	CHK. BY:	DESCRIPTION	DATE

NOTES:

CONFIDENTIAL: ALL INTELLECTUAL PROPERTY RIGHTS HEREIN ARE THE PROPERTY OF TRYLON TSF Inc. ALL DUPLICATION, RECORDING, DISCLOSURE OR USE IS PROHIBITED WITHOUT WRITTEN CONSENT OF TRYLON TSF Inc.

Trylon

CUSTOMER:	SITE:		
STW		1.000	
DATE: 14 SEP 12	BY: MAW	CHK: TLD	APP: JB

TITLE: EIA FOUNDATION NOTES

DRAWING NO. 000001.906.0026

Back to Agenda

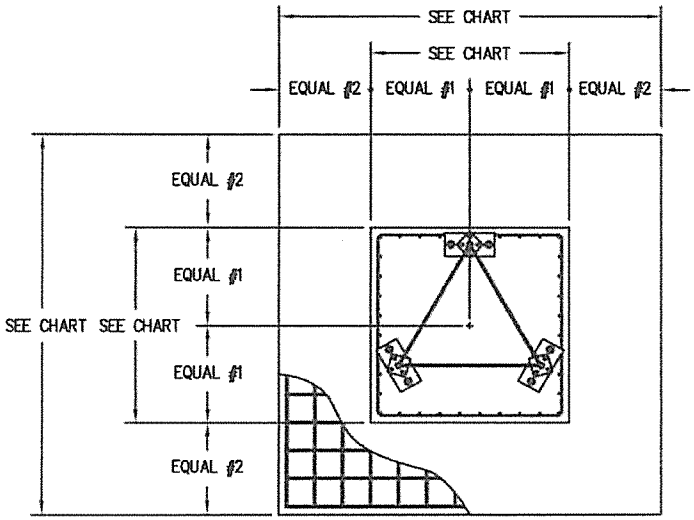

SUPERTITAN WELD (STW) CONCRETE FOUNDATION – ALL TOWER SECTIONS

SINGLE PAD DESIGN WITH 1 PIER

BOTTOM SECTION	PAD SIZE	PIER SIZE	EXCAVATION DEPTH	VERTICAL REBAR	FND INTERFACE KIT
1	6'-6" x 6'-6"	3'-6" x 3'-6"	5'-6"	(20) 20M (#6)	4.906.0020.006
2					4.906.0020.005
3		4'-0" x 4'-0"			4.906.0020.004
4	8'-0" x 8'-0"	4'-6" x 4'-6"	6'-0"	(30) 20M (#6)	
5					
6		5'-0" x 5'-0"			4.906.0020.003
7	9'-6" x 9'-6"	5'-0" x 5'-0"	6'-6"	(30) 20M (#6)	
8		5'-6" x 5'-6"			
9	10'-0" x 10'-0"	5'-6" x 5'-6"	6'-6"	(36) 20M (#6)	4.906.0020.002
10	11'-0" x 11'-0"	6'-0" x 6'-0"	6'-6"	(36) 20M (#6)	
11					
12	12'-6" x 12'-6"	6'-6" x 6'-6"	7'-0"	(36) 25M (#8)	4.906.0020.001
13					
14	13'-6" x 13'-6"	7'-0" x 7'-0"	7'-0"	(36) 25M (#8)	
15					

NOTES:
1. REFER TO DWG 000001.906.0025 FOR CSA FOUNDATION NOTES.
2. REFER TO DWG 000001.906.0026 FOR EIA FOUNDATION NOTES.
3. ALWAYS INSTALL ANCHOR RODS USING SUPPLIED TEMPLATE.

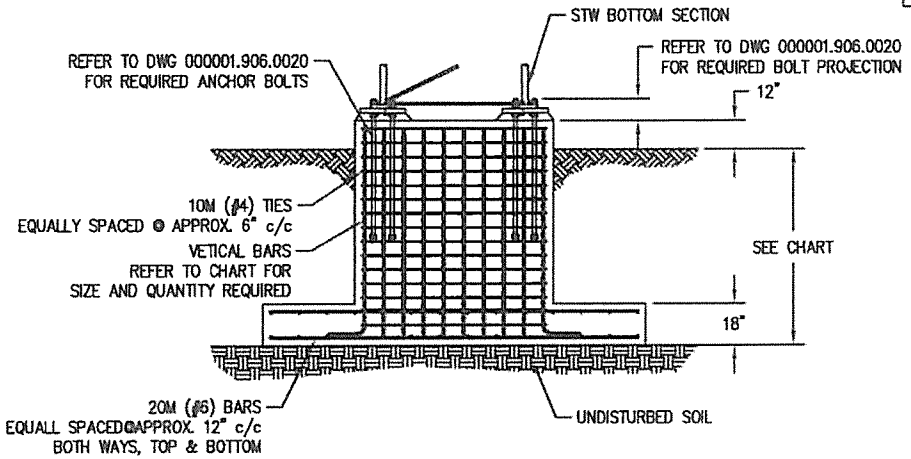

NOTES:

REV.	REV. BY:	CHK. BY:	DESCRIPTION	DATE

CONFIDENTIAL: ALL INTELLECTUAL PROPERTY RIGHTS HEREIN ARE THE PROPERTY OF TRYLON TSF Inc. ALL DUPLICATION, RECORDING, DISCLOSURE OR USE IS PROHIBITED WITHOUT WRITTEN CONSENT OF TRYLON TSF Inc.

Trylon

CUSTOMER: STW	SITE:		SCALE: 50.000
DATE: 14 SEP 12	BY: MAW	CHK: TLD	APP: JB
TITLE: REGULAR NDS FOUNDATION			DRAWING NO. 000001.906.0024

Back to Agenda

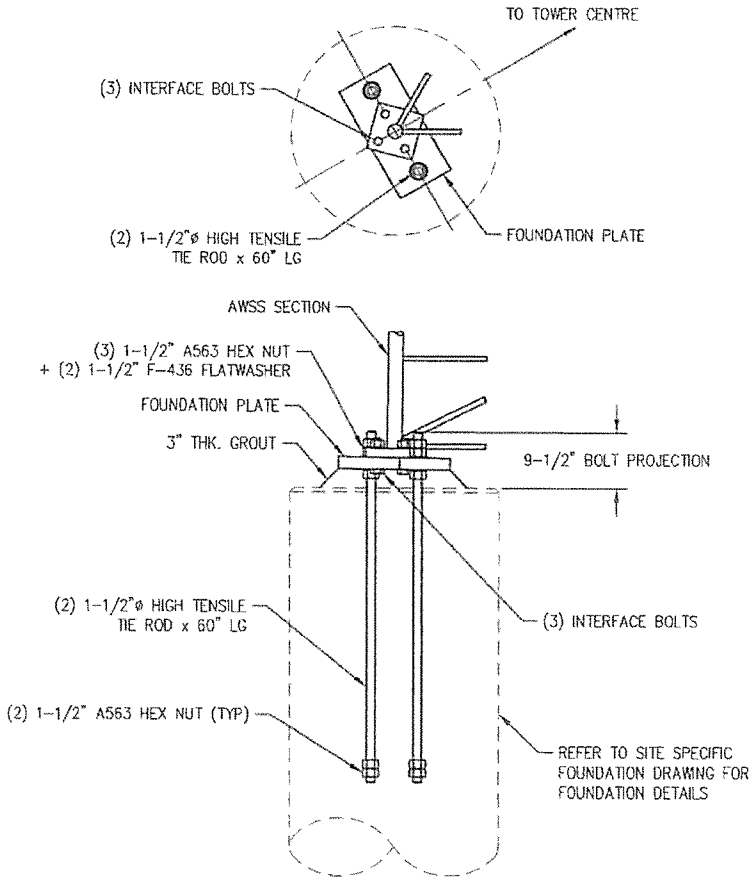

KIT NUMBER	TOWER SECTION	FOUNDATION PLATE	INTERFACE BOLT
4.906.0020.001	15	3.906.0815.001	1-1/4" x 5-1/2" A325
	14		
	13		
	12		
4.906.0020.002	11	3.906.0815.002	1-1/4" x 5-1/2" A325
	10		
	9		
4.906.0020.003	8	3.906.0815.003	1" x 4-1/2" A325
	7		
	6		
4.906.0020.004	5	3.906.0815.004	1" x 4-1/2" A325
	4		
	3		
4.906.0020.005	2	3.906.0815.005	5/8" x 4" A325
4.906.0020.006	1	3.906.0815.006	5/8" x 4" A325

NOTES: 1) KITS CONTAIN MATERIAL FOR ALL 3 TOWER LEGS.

REV.	REV. BY:	CHK. BY:	DESCRIPTION	DATE

CONFIDENTIAL: ALL INTELLECTUAL PROPERTY RIGHTS HEREIN ARE THE PROPERTY OF TRYLON TSF Inc. ALL DUPLICATION, RECORDING, DISCLOSURE OR USE IS PROHIBITED WITHOUT WRITTEN CONSENT OF TRYLON TSF Inc.

Trylon

CUSTOMER:	SITE:	SCALE: 20.000
DATE: 10 FEB 12	BY: MAW	CHK: / APP:
TITLE: AWSS FOUNDATION INTERFACE		DRAWING NO. 000001.906.0020

M:\000001.906\0020-1.dwg, 4/18/2012 12:51:12 PM, detailing

Back to Agenda

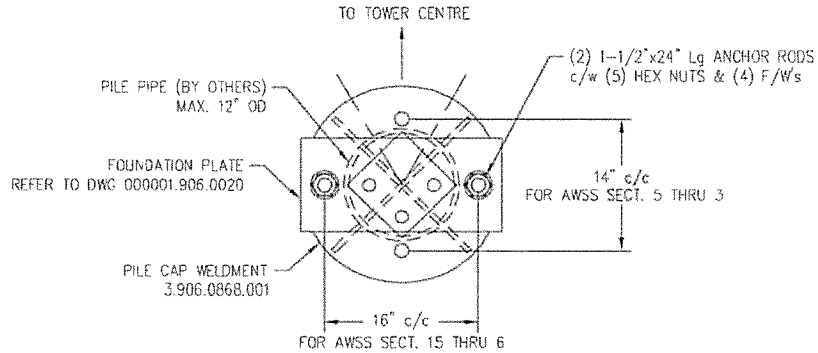

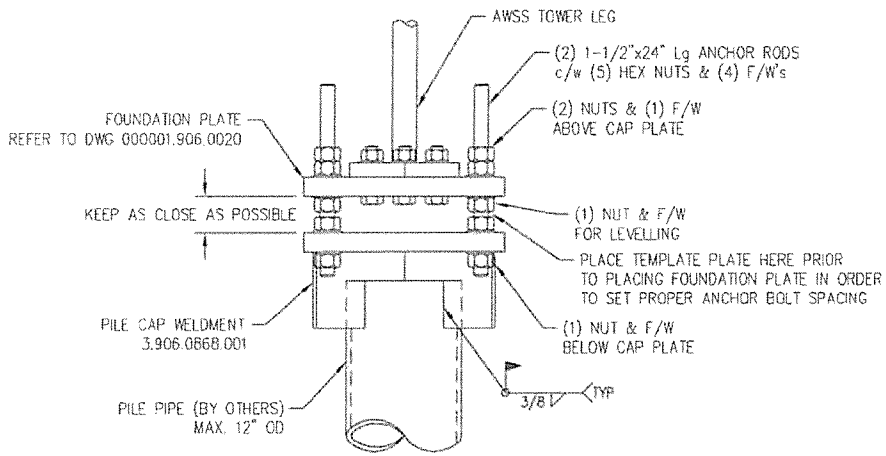

BOTTOM SECTION	KIT NUMBER	TEMPLATE DWG
15	4.906.0023.015	000001.909.0300
14	4.906.0023.014	000001.909.0301
13	4.906.0023.013	000001.909.0302
12	4.906.0023.012	000001.909.0303
11	4.906.0023.011	000001.909.0304
10	4.906.0023.010	000001.909.0305
9	4.906.0023.009	000001.909.0306
8	4.906.0023.008	000001.909.0307
7	4.906.0023.007	000001.909.0308
6	4.906.0023.006	000001.909.0309
5	4.906.0023.005	000001.909.0310
4	4.906.0023.004	000001.909.0311
3	4.906.0023.003	000001.909.0312
2	4.906.0023.002	000001.909.0313
1	4.906.0023.001	000001.909.0314

NOTES:

REV.	REV. BY:	CHK. BY:	DESCRIPTION	DATE

CONFIDENTIAL: ALL INTELLECTUAL PROPERTY RIGHTS HEREIN ARE THE PROPERTY OF TRYLON TSF Inc. ALL DUPLICATION, RECORDING, DISCLOSURE OR USE IS PROHIBITED WITHOUT WRITTEN CONSENT OF TRYLON TSF Inc.

Trylon

CUSTOMER:	SITE:	SCALE: 12.000	
DATE: 17 SEP 12	BY: MAW	CHK: TLD	APP: JB
TITLE: AWSS PILE CAP INSTALLATION		DRAWING NO. 000001.906.0023	

Back to Agenda

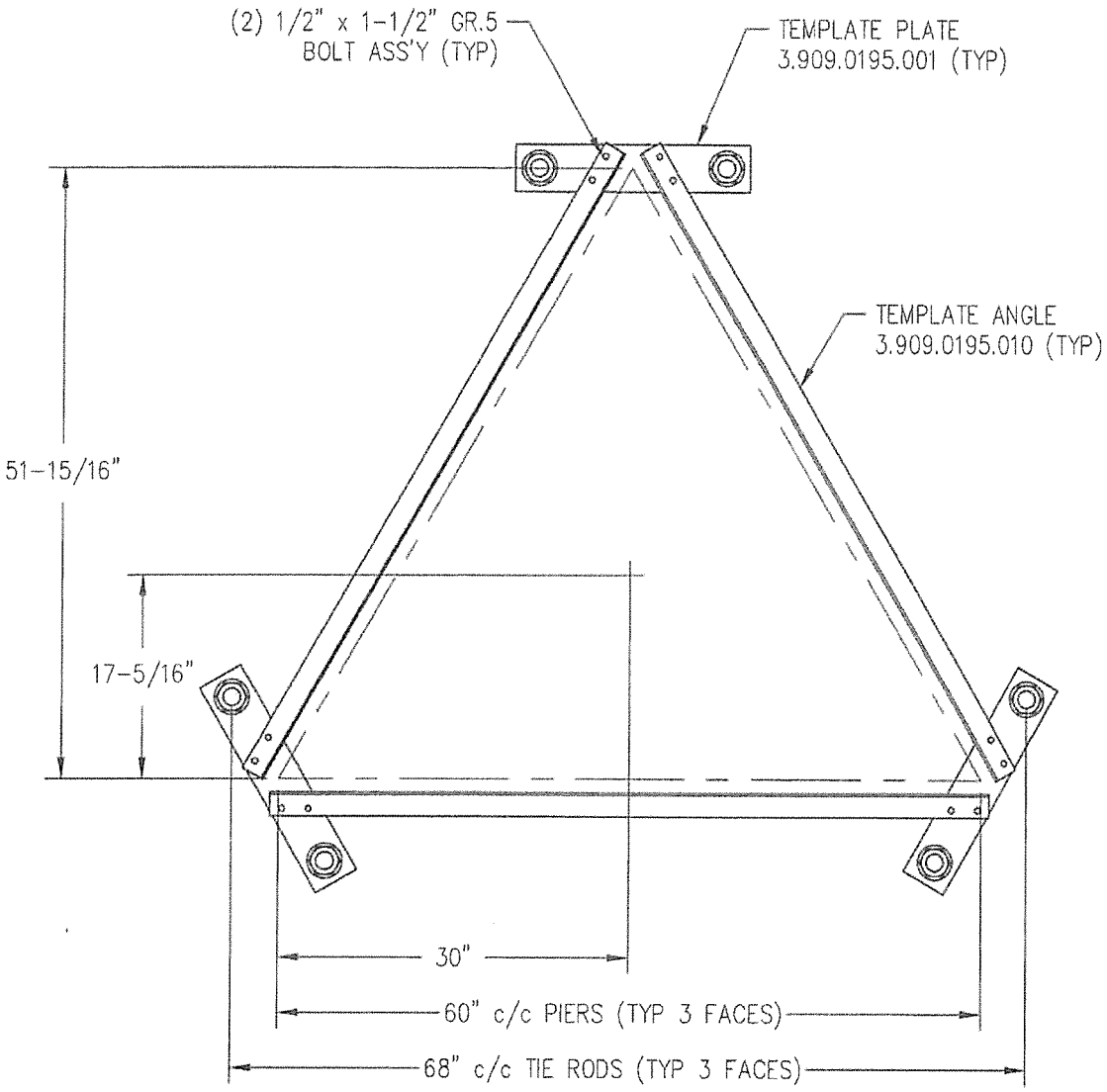

CONFIDENTIAL:
ALL INTELLECTUAL PROPERTY RIGHTS HEREIN ARE THE PROPERTY OF TRYLON TSF Inc. ALL DUPLICATION, RECORDING, DISCLOSURE OR USE IS PROHIBITED WITHOUT WRITTEN CONSENT OF TRYLON TSF Inc.

REV.	REV. BY:	CHK. BY:	DESCRIPTION	DATE

NOTES:

1) FOUNDATION CONTRACTOR TO VERIFY ALL DIMENSIONS PRIOR TO POURING CONTRETE.

CUSTOMER:	SITE: SECTION 15	SCALE: 15.000	
DATE: 06 FEB 12	BY: MAW	CHK:	APP:
TITLE: AWSS TEMPLATE ASS'Y		DRAWING NO. 000001.909.0300	

Back to Agenda

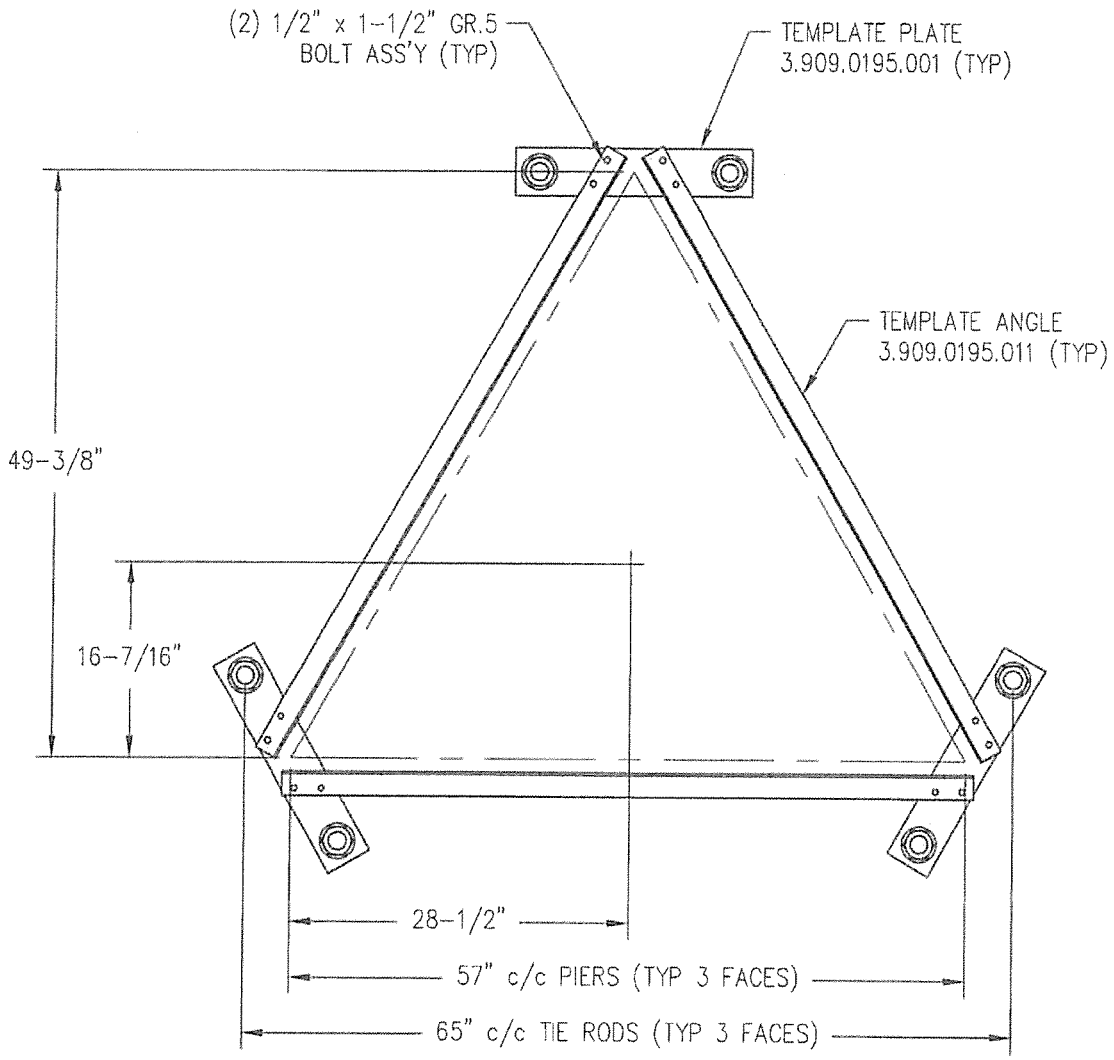

CONFIDENTIAL:
ALL INTELLECTUAL PROPERTY RIGHTS HEREIN ARE THE PROPERTY OF TRYLON TSF Inc. ALL DUPLICATION, RECORDING, DISCLOSURE OR USE IS PROHIBITED WITHOUT WRITTEN CONSENT OF TRYLON TSF Inc.

REV.	REV. BY:	CHK. BY:	DESCRIPTION	DATE

NOTES:

1) FOUNDATION CONTRACTOR TO VERIFY ALL DIMENSIONS PRIOR TO POURING CONTRETE.

Trylon

CUSTOMER:	SITE: SECTION 14	SCALE: 15.000	
DATE: 06 FEB 12	BY: MAW	CHK:	APP:
TITLE: AWSS TEMPLATE ASS'Y		DRAWING NO. 000001.909.0301	

Back to Agenda

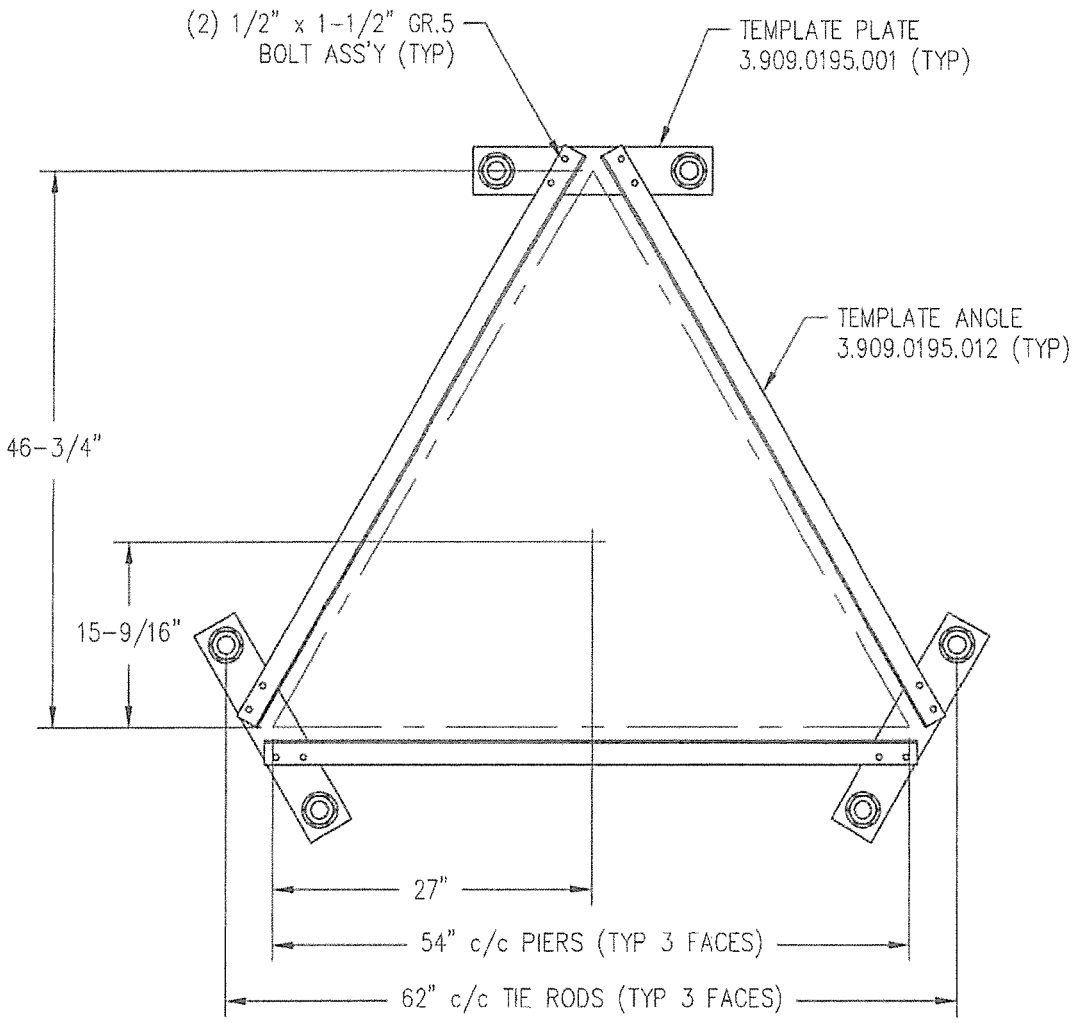

CONFIDENTIAL:
ALL INTELLECTUAL PROPERTY RIGHTS HEREIN ARE THE PROPERTY OF TRYLON TSF Inc. ALL DUPLICATION, RECORDING, DISCLOSURE OR USE IS PROHIBITED WITHOUT WRITTEN CONSENT OF TRYLON TSF Inc.

REV.	REV. BY:	CHK. BY:	DESCRIPTION	DATE

NOTES:

1) FOUNDATION CONTRACTOR TO VERIFY ALL DIMENSIONS PRIOR TO POURING CONTRETE.

Trylon

CUSTOMER:	SITE: SECTION 13	SCALE: 15.000	
DATE: 06 FEB 12	BY: MAW	CHK:	APP:
TITLE: AWSS TEMPLATE ASS'Y		DRAWING NO. 000001.909.0302	

Back to Agenda

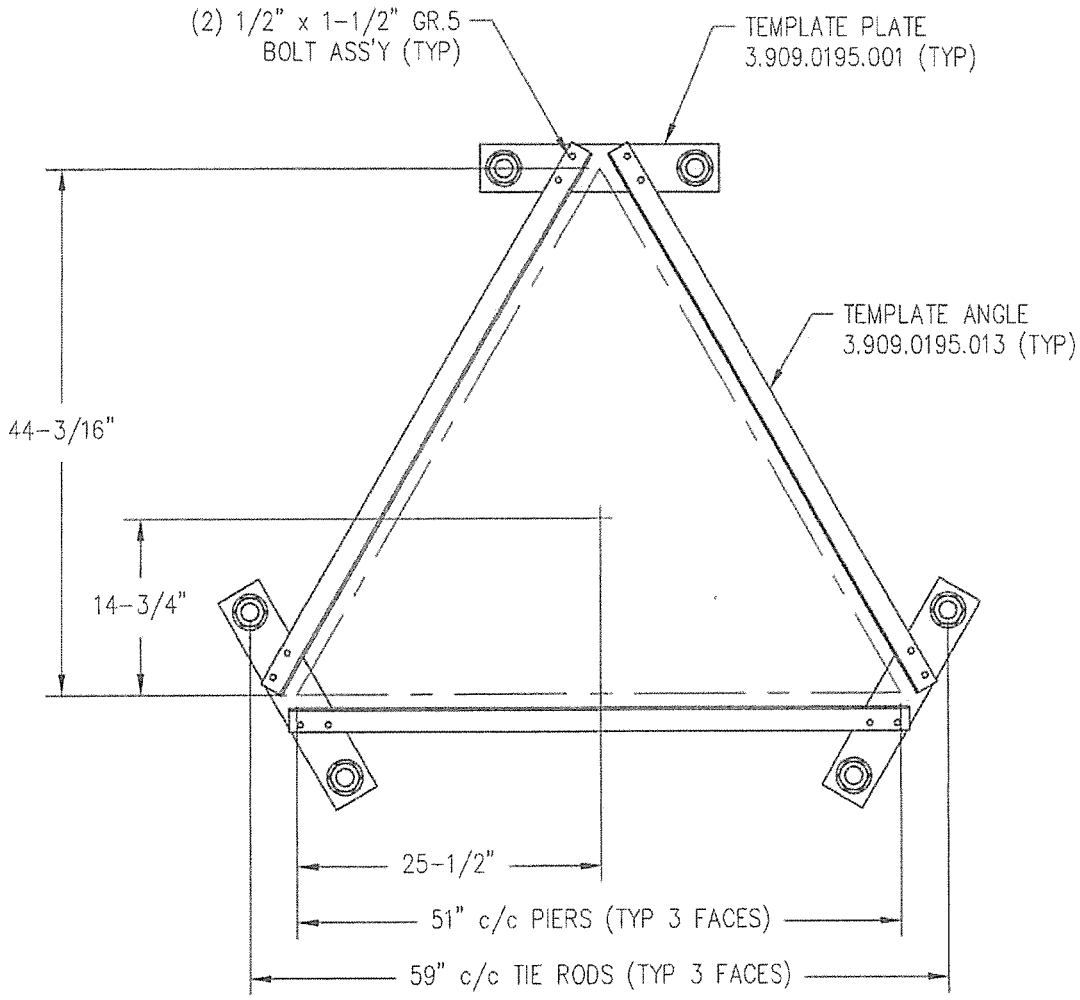

CONFIDENTIAL:
ALL INTELLECTUAL PROPERTY RIGHTS HEREIN ARE THE PROPERTY OF TRYLON TSF Inc. ALL DUPLICATION, RECORDING, DISCLOSURE OR USE IS PROHIBITED WITHOUT WRITTEN CONSENT OF TRYLON TSF Inc.

REV.	REV. BY:	CHK. BY:	DESCRIPTION	DATE

NOTES:

1) FOUNDATION CONTRACTOR TO VERIFY ALL DIMENSIONS PRIOR TO POURING CONTRETE.

Trylon

CUSTOMER:	SITE: SECTION 12	SCALE: 15.000

DATE: 06 FEB 12	BY: MAW	CHK:	APP:

TITLE: AWSS TEMPLATE ASS'Y	DRAWING NO. 000001.909.0303

Back to Agenda

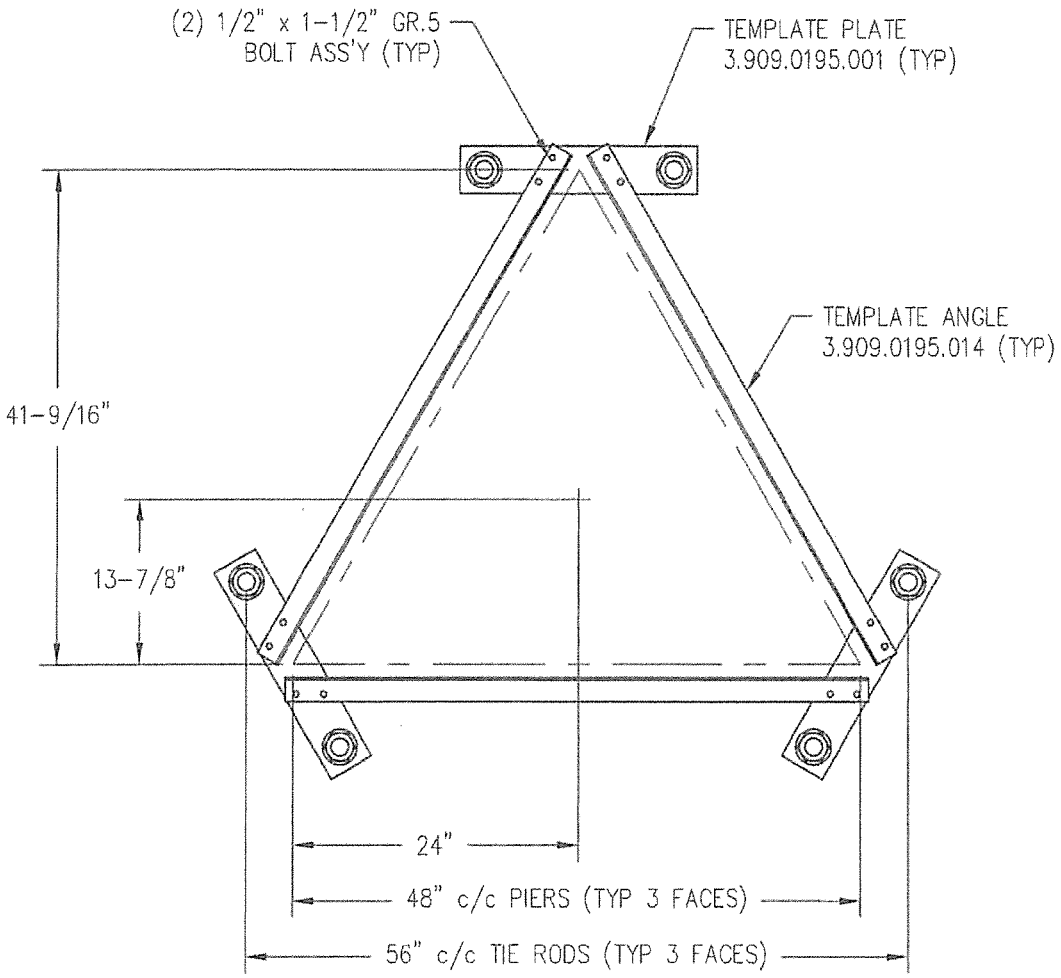

CONFIDENTIAL:
ALL INTELLECTUAL PROPERTY RIGHTS HEREIN ARE THE PROPERTY OF TRYLON TSF Inc. ALL DUPLICATION, RECORDING, DISCLOSURE OR USE IS PROHIBITED WITHOUT WRITTEN CONSENT OF TRYLON TSF Inc.

REV.	REV. BY:	CHK. BY:	DESCRIPTION	DATE

NOTES:

1) FOUNDATION CONTRACTOR TO VERIFY ALL DIMENSIONS PRIOR TO POURING CONTRETE.

Trylon

CUSTOMER:	SITE: SECTION 11	SCALE: 15.000	
DATE: 06 FEB 12	BY: MAW	CHK:	APP:
TITLE: AWSS TEMPLATE ASS'Y		DRAWING NO. 000001.909.0304	

Back to Agenda

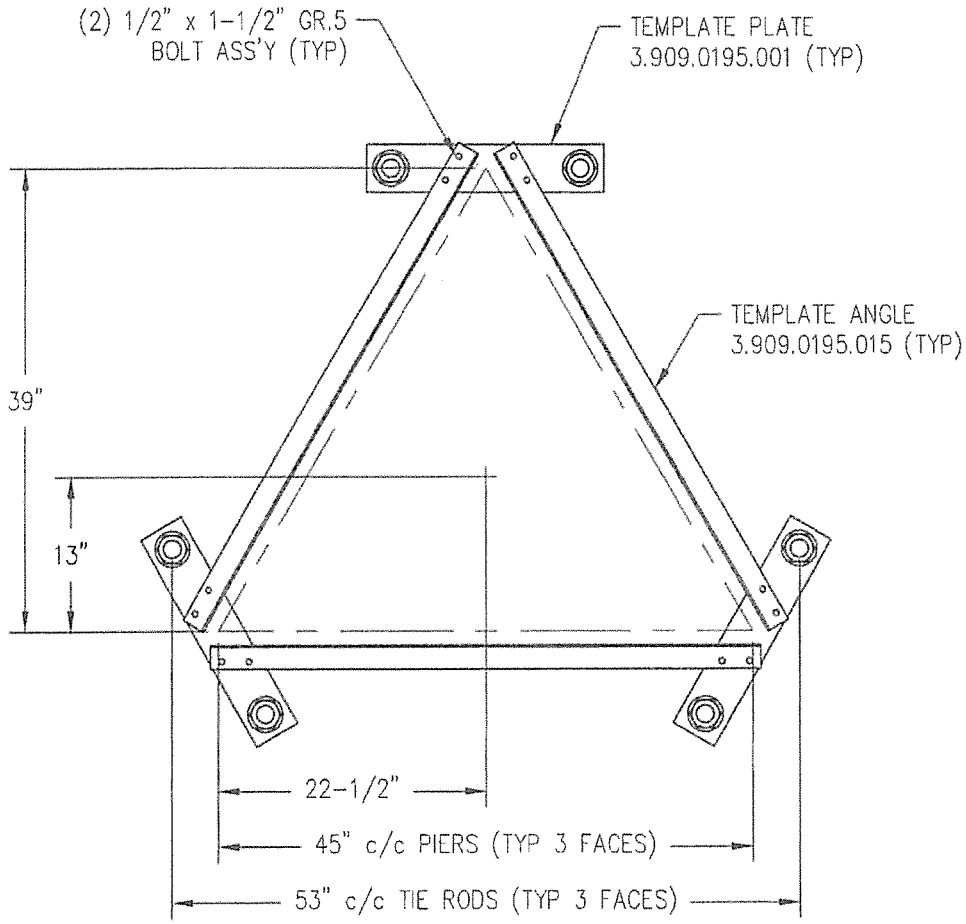

CONFIDENTIAL:
ALL INTELLECTUAL PROPERTY RIGHTS HEREIN ARE THE PROPERTY OF TRYLON TSF Inc. ALL DUPLICATION, RECORDING, DISCLOSURE OR USE IS PROHIBITED WITHOUT WRITTEN CONSENT OF TRYLON TSF Inc.

REV.	REV. BY:	CHK. BY:	DESCRIPTION	DATE

NOTES:

1) FOUNDATION CONTRACTOR TO VERIFY ALL DIMENSIONS PRIOR TO POURING CONTRETE.

Trylon

CUSTOMER:	SITE: SECTION 10	SCALE: 15.000	
DATE: 06 FEB 12	BY: MAW	CHK:	APP:
TITLE: AWSS TEMPLATE ASS'Y		DRAWING NO. 000001.909.0305	

Back to Agenda

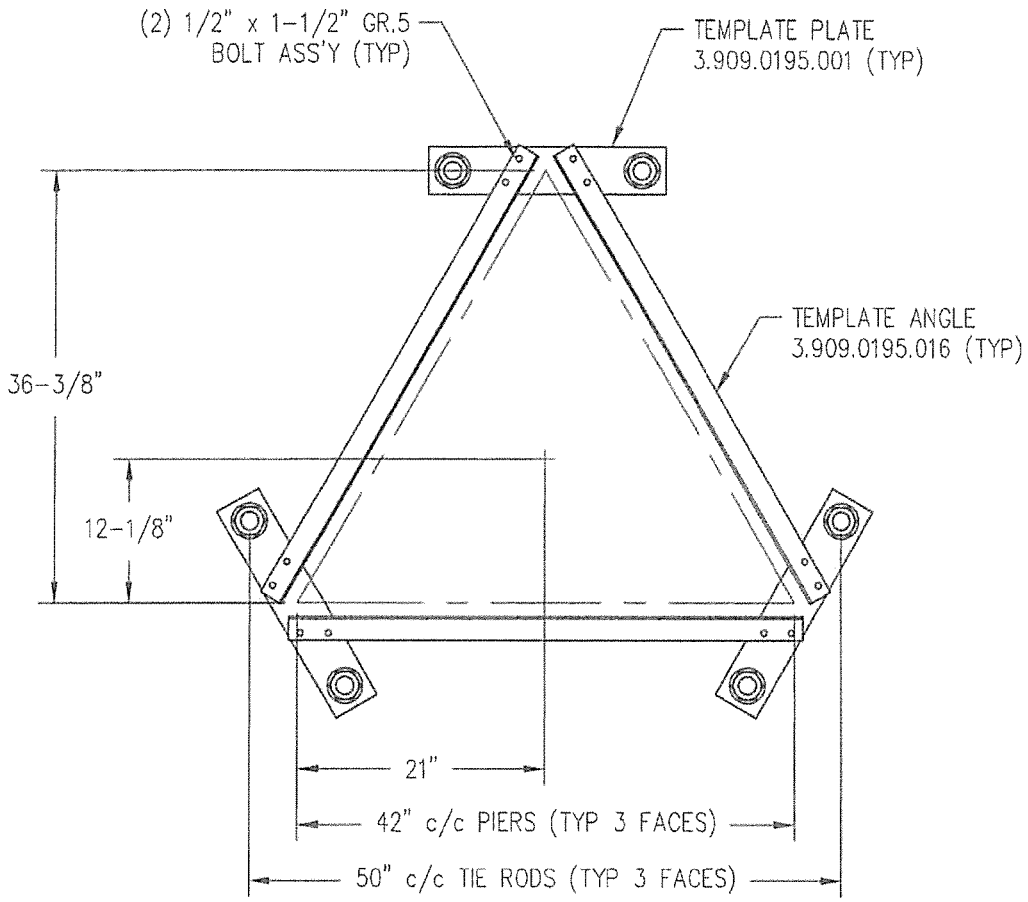

CONFIDENTIAL:
ALL INTELLECTUAL PROPERTY RIGHTS HEREIN ARE THE PROPERTY OF TRYLON TSF Inc. ALL DUPLICATION, RECORDING, DISCLOSURE OR USE IS PROHIBITED WITHOUT WRITTEN CONSENT OF TRYLON TSF Inc.

REV.	REV. BY:	CHK. BY:	DESCRIPTION	DATE

NOTES:

1) FOUNDATION CONTRACTOR TO VERIFY ALL DIMENSIONS PRIOR TO POURING CONTRETE.

Trylon

CUSTOMER:	SITE: SECTION 9	SCALE: 15.000	
DATE: 06 FEB 12	BY: MAW	CHK:	APP:
TITLE: AWSS TEMPLATE ASS'Y		DRAWING NO. 000001.909.0306	

Back to Agenda

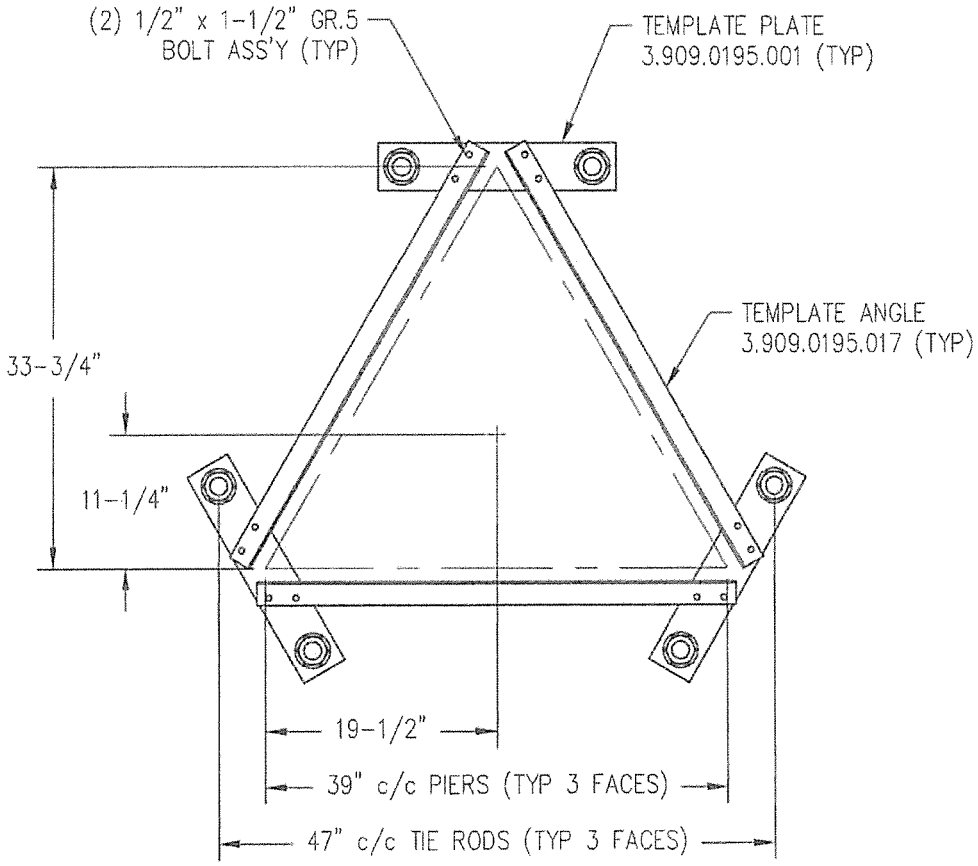

CONFIDENTIAL:
ALL INTELLECTUAL PROPERTY RIGHTS HEREIN ARE THE PROPERTY OF TRYLON TSF Inc. ALL DUPLICATION, RECORDING, DISCLOSURE OR USE IS PROHIBITED WITHOUT WRITTEN CONSENT OF TRYLON TSF Inc.

REV.	REV. BY:	CHK. BY:	DESCRIPTION	DATE

NOTES:

1) FOUNDATION CONTRACTOR TO VERIFY ALL DIMENSIONS PRIOR TO POURING CONTRETE.

Trylon

CUSTOMER:	SITE: SECTION 8	SCALE: 15.000

DATE: 06 FEB 12	BY: MAW	CHK:	APP:

TITLE: AWSS TEMPLATE ASS'Y	DRAWING NO. 000001.909.0307

Back to Agenda

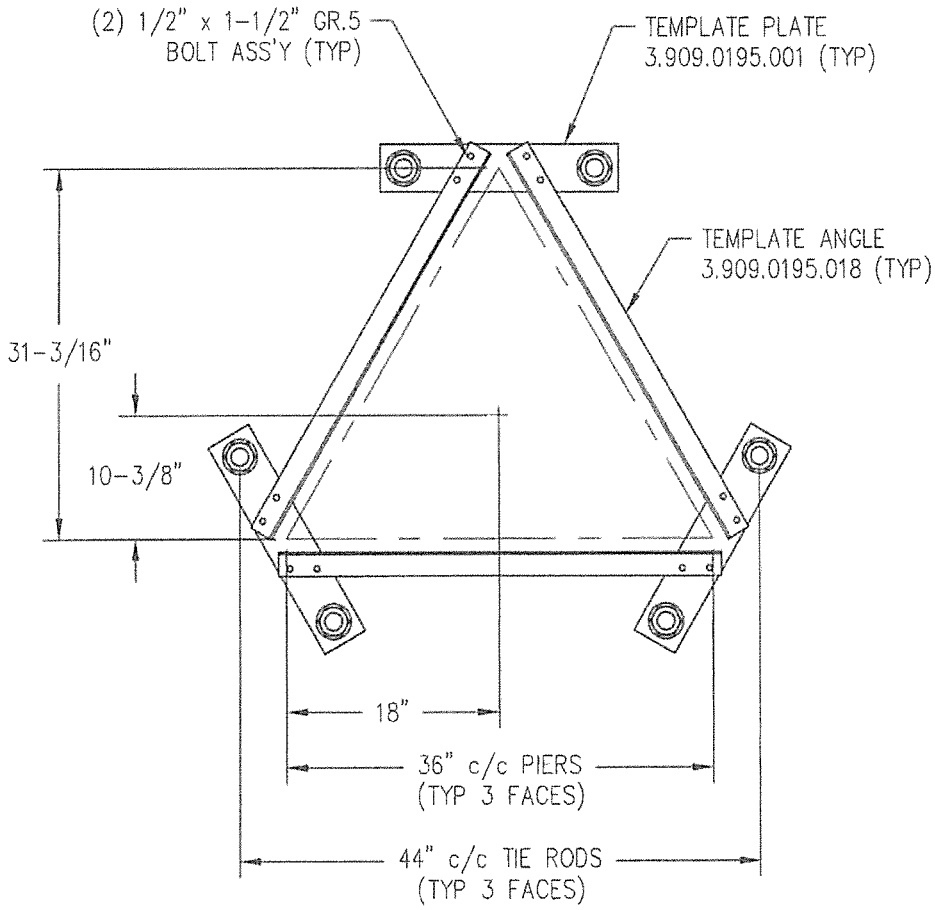

CONFIDENTIAL:
ALL INTELLECTUAL PROPERTY RIGHTS HEREIN ARE THE PROPERTY OF TRYLON TSF Inc. ALL DUPLICATION, RECORDING, DISCLOSURE OR USE IS PROHIBITED WITHOUT WRITTEN CONSENT OF TRYLON TSF Inc.

REV.	REV. BY:	CHK. BY:	DESCRIPTION	DATE

NOTES:

1) FOUNDATION CONTRACTOR TO VERIFY ALL DIMENSIONS PRIOR TO POURING CONTRETE.

Trylon

CUSTOMER:	SITE: SECTION 7	SCALE: 15.000

DATE: 06 FEB 12	BY: MAW	CHK:	APP:

TITLE: AWSS TEMPLATE ASS'Y	DRAWING NO. 000001.909.0308

Back to Agenda

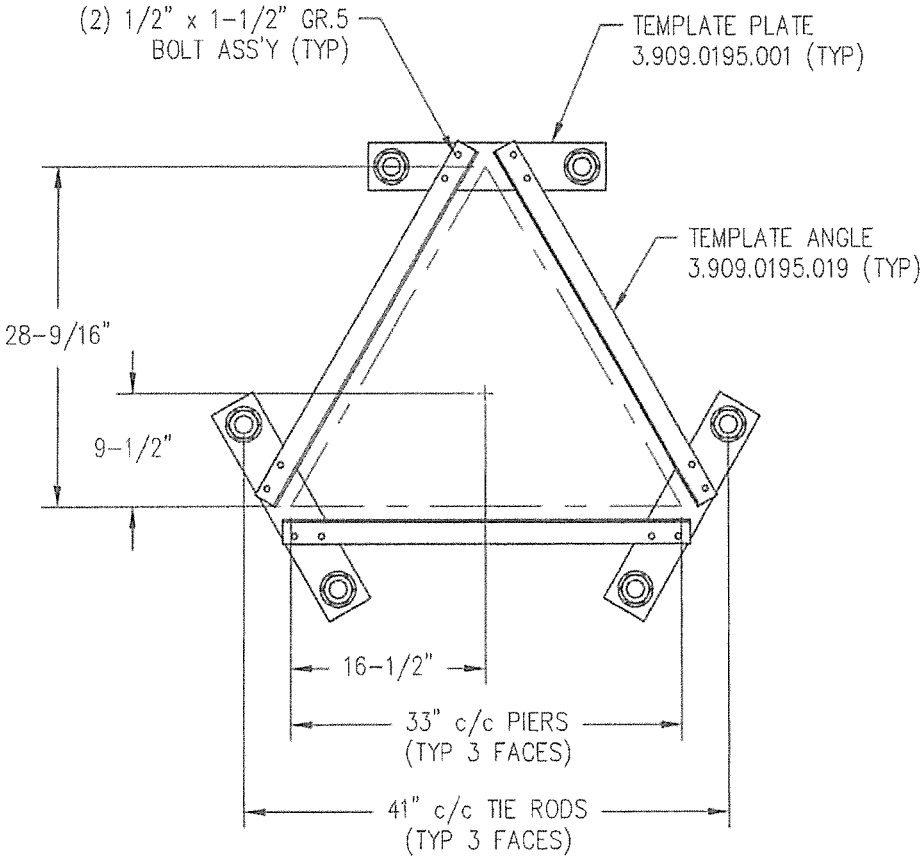

CONFIDENTIAL:
ALL INTELLECTUAL PROPERTY RIGHTS HEREIN ARE THE PROPERTY OF TRYLON TSF Inc. ALL DUPLICATION, RECORDING, DISCLOSURE OR USE IS PROHIBITED WITHOUT WRITTEN CONSENT OF TRYLON TSF Inc.

REV.	REV. BY:	CHK. BY:	DESCRIPTION	DATE

NOTES:

1) FOUNDATION CONTRACTOR TO VERIFY ALL DIMENSIONS PRIOR TO POURING CONTRETE.

Trylon

CUSTOMER:	SITE: SECTION 6	SCALE: 15.000

DATE: 06 FEB 12	BY: MAW	CHK:	APP:

TITLE: AWSS TEMPLATE ASS'Y	DRAWING NO. 000001.909.0309

Back to Agenda

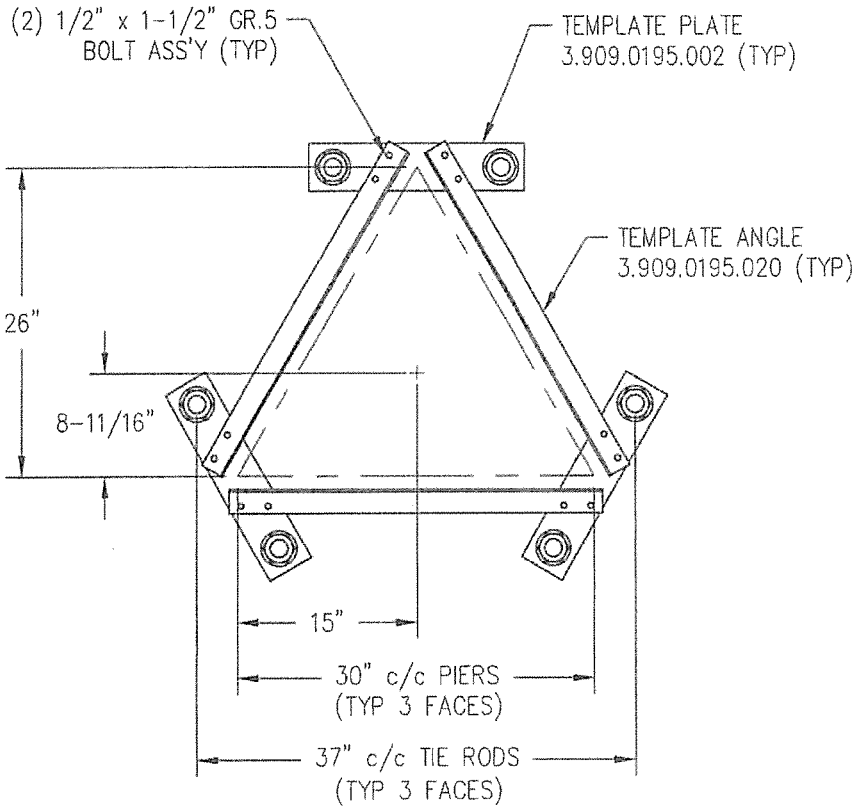

CONFIDENTIAL:
ALL INTELLECTUAL PROPERTY RIGHTS HEREIN ARE THE PROPERTY OF TRYLON TSF Inc. ALL DUPLICATION, RECORDING, DISCLOSURE OR USE IS PROHIBITED WITHOUT WRITTEN CONSENT OF TRYLON TSF Inc.

REV.	REV. BY:	CHK. BY:	DESCRIPTION	DATE

NOTES:

1) FOUNDATION CONTRACTOR TO VERIFY ALL DIMENSIONS PRIOR TO POURING CONTRETE.

Trylon

CUSTOMER:	SITE: SECTION 5	SCALE: 15.000
DATE: 06 FEB 12	BY: MAW	CHK: / APP:
TITLE: AWSS TEMPLATE ASS'Y		DRAWING NO. 000001.909.0310

Back to Agenda

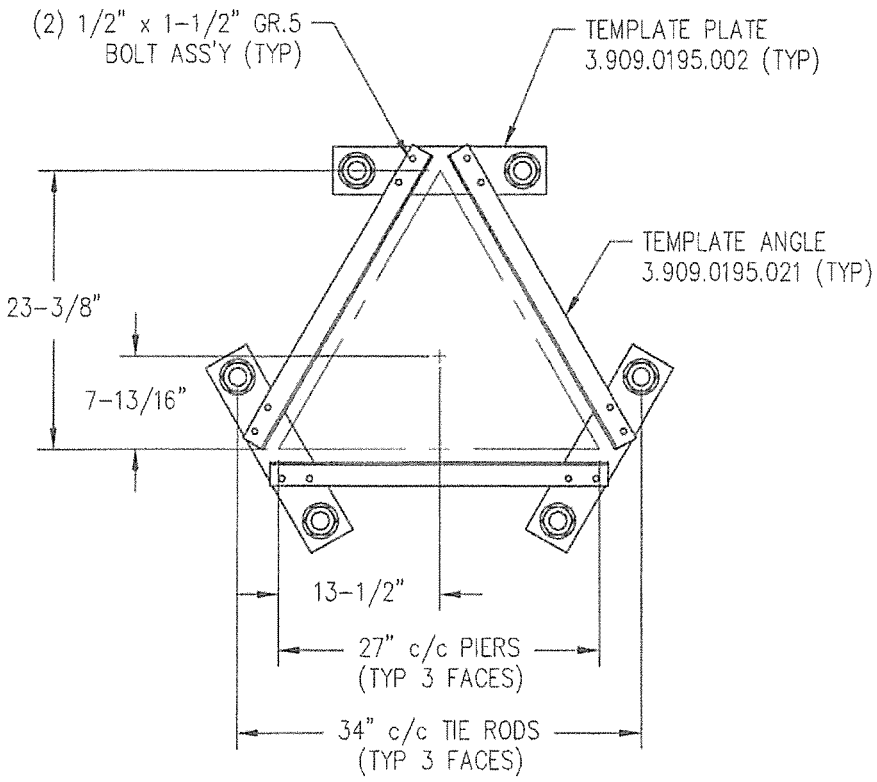

CONFIDENTIAL:
ALL INTELLECTUAL PROPERTY RIGHTS HEREIN ARE THE PROPERTY OF TRYLON TSF Inc. ALL DUPLICATION, RECORDING, DISCLOSURE OR USE IS PROHIBITED WITHOUT WRITTEN CONSENT OF TRYLON TSF Inc.

REV.	REV. BY:	CHK. BY:	DESCRIPTION	DATE

NOTES:

1) FOUNDATION CONTRACTOR TO VERIFY ALL DIMENSIONS PRIOR TO POURING CONTRETE.

Trylon

CUSTOMER:	SITE: SECTION 4	SCALE: 15.000	
DATE: 06 FEB 12	BY: MAW	CHK:	APP:
TITLE: AWSS TEMPLATE ASS'Y		DRAWING NO. 000001.909.0311	

Back to Agenda

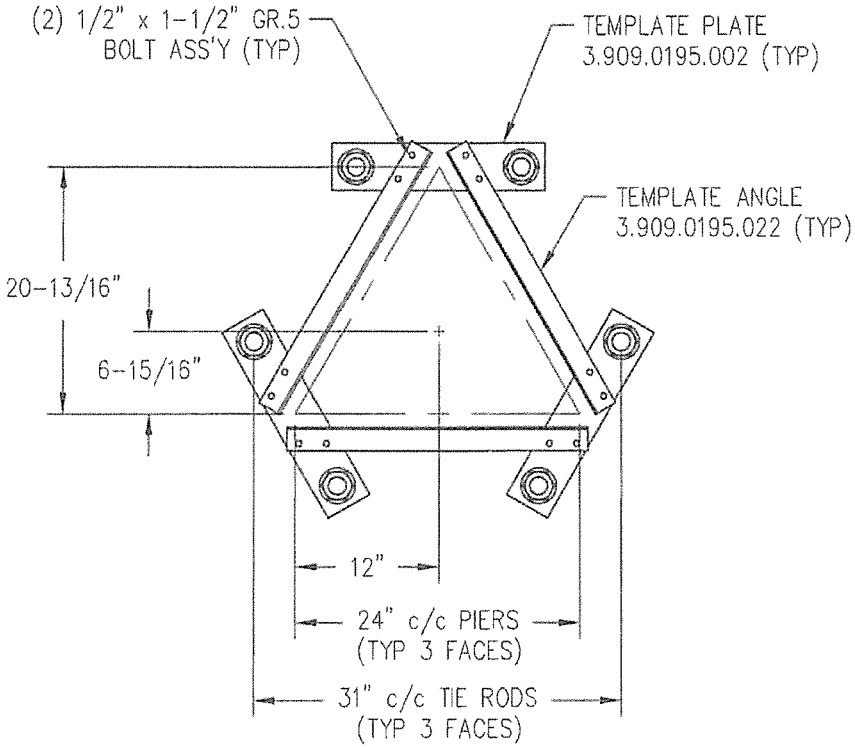

CONFIDENTIAL:
ALL INTELLECTUAL PROPERTY RIGHTS HEREIN ARE THE PROPERTY OF TRYLON TSF Inc. ALL DUPLICATION, RECORDING, DISCLOSURE OR USE IS PROHIBITED WITHOUT WRITTEN CONSENT OF TRYLON TSF Inc.

REV.	REV. BY:	CHK. BY:	DESCRIPTION	DATE

NOTES:

1) FOUNDATION CONTRACTOR TO VERIFY ALL DIMENSIONS PRIOR TO POURING CONTRETE.

Trylon

CUSTOMER:	SITE: SECTION 3	SCALE: 15.000	
DATE: 06 FEB 12	BY: MAW	CHK:	APP:
TITLE: AWSS TEMPLATE ASS'Y		DRAWING NO. 000001.909.0312	

Back to Agenda

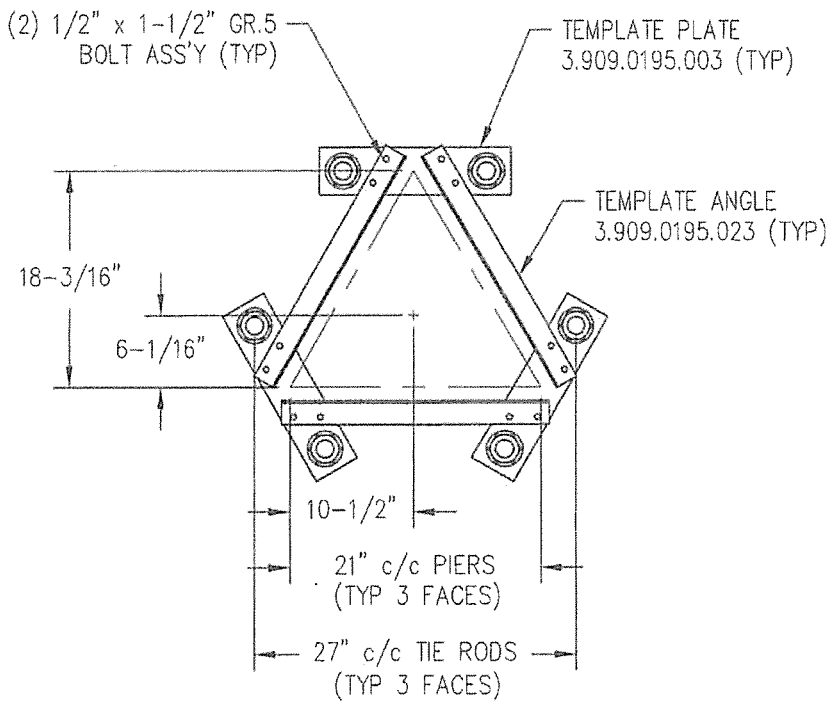

CONFIDENTIAL:
ALL INTELLECTUAL PROPERTY RIGHTS HEREIN ARE THE PROPERTY OF TRYLON TSF Inc. ALL DUPLICATION, RECORDING, DISCLOSURE OR USE IS PROHIBITED WITHOUT WRITTEN CONSENT OF TRYLON TSF Inc.

REV.	REV. BY:	CHK. BY:	DESCRIPTION	DATE

NOTES:

1) FOUNDATION CONTRACTOR TO VERIFY ALL DIMENSIONS PRIOR TO POURING CONTRETE.

Trylon

CUSTOMER:	SITE: SECTION 2	SCALE: 15.000

DATE: 06 FEB 12	BY: MAW	CHK:	APP:

TITLE: AWSS TEMPLATE ASS'Y	DRAWING NO. 000001.909.0313

Back to Agenda

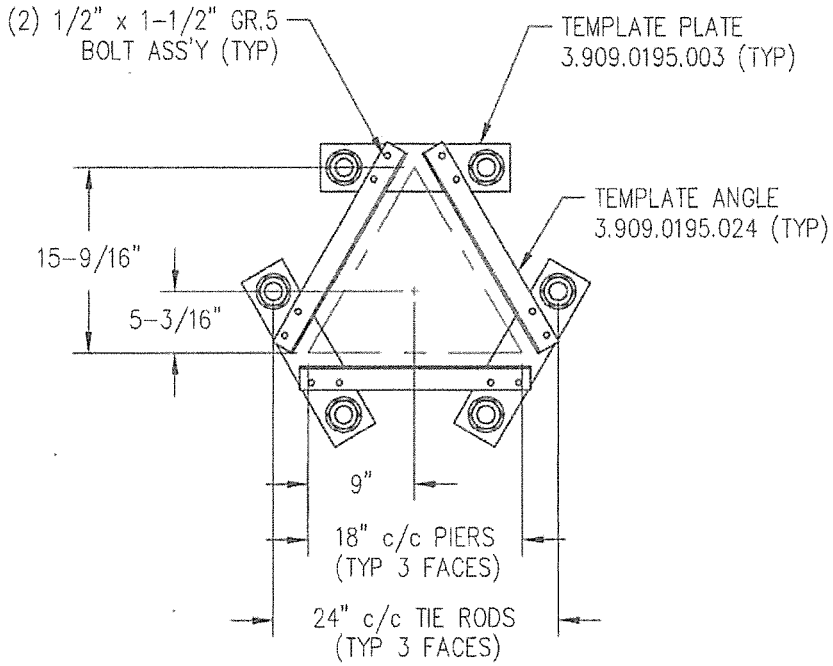

CONFIDENTIAL:
ALL INTELLECTUAL PROPERTY RIGHTS HEREIN ARE THE PROPERTY OF TRYLON TSF Inc. ALL DUPLICATION, RECORDING, DISCLOSURE OR USE IS PROHIBITED WITHOUT WRITTEN CONSENT OF TRYLON TSF Inc.

REV.	REV. BY:	CHK. BY:	DESCRIPTION	DATE

NOTES:

1) FOUNDATION CONTRACTOR TO VERIFY ALL DIMENSIONS PRIOR TO POURING CONTRETE.

Trylon

CUSTOMER:	SITE: SECTION 1	SCALE: 15.000	
DATE: 06 FEB 12	BY: MAW	CHK:	APP:
TITLE: AWSS TEMPLATE ASS'Y		DRAWING NO. 000001.909.0314	

Back to Agenda

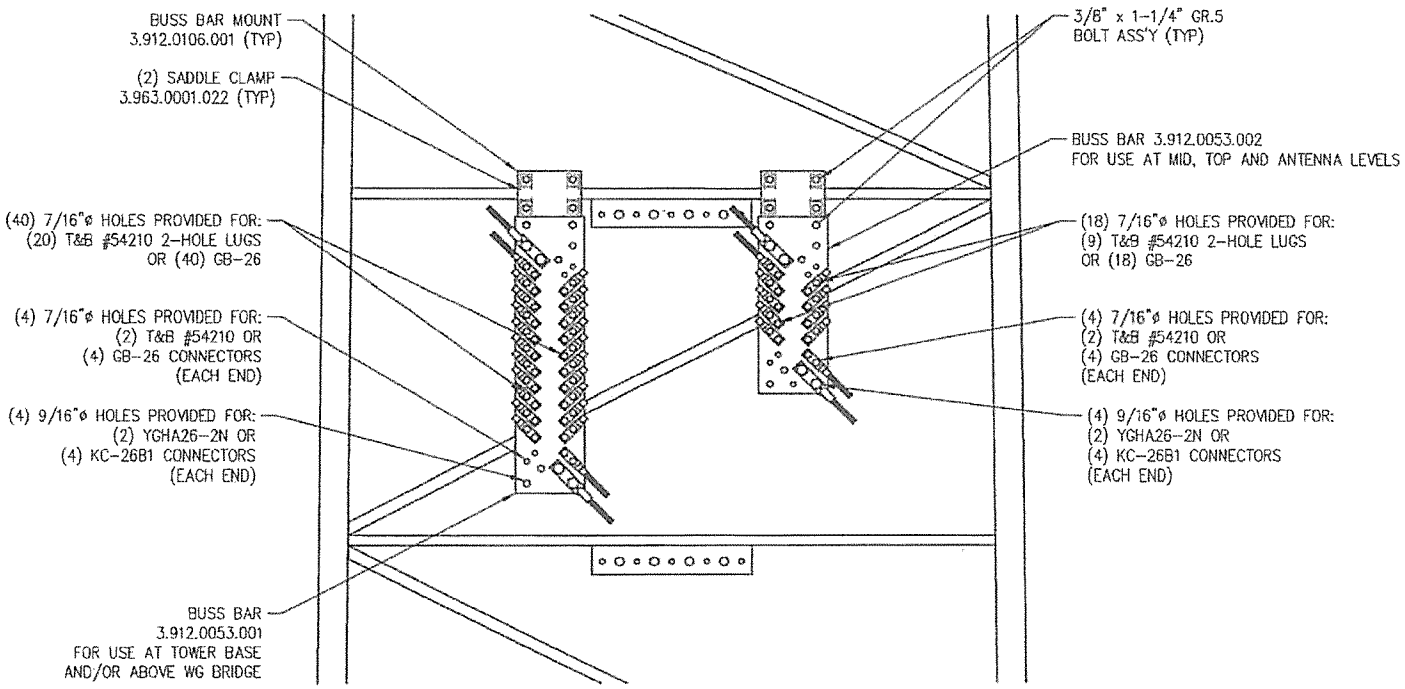

NOTES:

REV.	REV. BY:	CHK. BY:	DESCRIPTION	DATE

CONFIDENTIAL: ALL INTELLECTUAL PROPERTY RIGHTS HEREIN ARE THE PROPERTY OF TRYLON TSF Inc. ALL DUPLICATION, RECORDING, DISCLOSURE OR USE IS PROHIBITED WITHOUT WRITTEN CONSENT OF TRYLON TSF Inc.

Trylon

CUSTOMER:	SITE: AWSS TOWERS	SCALE: 10.000	
DATE: 21 FEB 12	BY: MAW	CHK: TLD	APP: JB
TITLE: BUSS BAR MOUNT		DRAWING NO. 000001.912.1011	

Back to Agenda

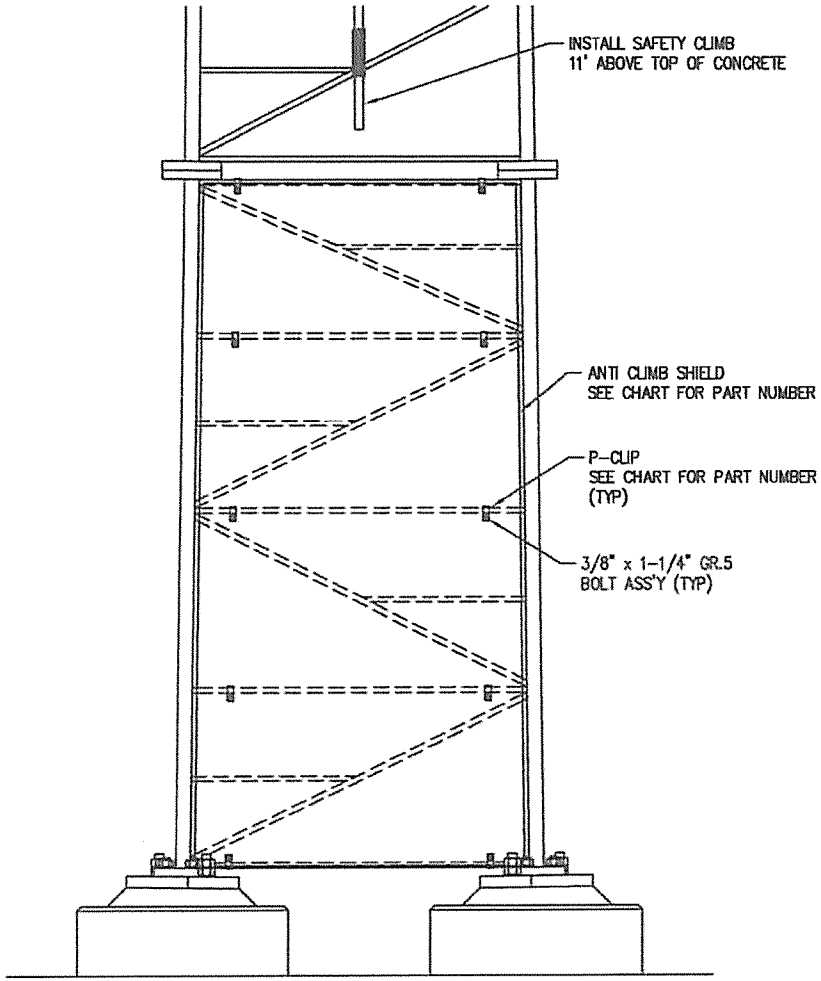

KIT NUMBER	SECTION NUMBER	SHIELD NUMBER	P-CLIP NUMBER
4.936.0026.015	15	3.936.0120.015	3.963.0001.047
4.936.0026.014	14	3.936.0120.014	3.963.0001.047
4.936.0026.013	13	3.936.0120.013	3.963.0001.046
4.936.0026.012	12	3.936.0120.012	3.963.0001.046
4.936.0026.011	11	3.936.0120.011	3.963.0001.046
4.936.0026.010	10	3.936.0120.010	3.963.0001.046
4.936.0026.009	9	3.936.0120.009	3.963.0001.046
4.936.0026.008	8	3.936.0120.008	3.963.0001.046
4.936.0026.007	7	3.936.0120.007	3.963.0001.046
4.936.0026.006	6	3.936.0120.006	3.963.0001.046
4.936.0026.005	5	3.936.0120.005	3.963.0001.046
4.936.0026.004	4	3.936.0120.004	3.963.0001.046
4.936.0026.003	3	3.936.0120.003	3.963.0001.046
4.936.0026.002	2	3.936.0120.002	3.963.0001.046

INSTALLATION INSTRUCTIONS:

1. INSTALL SHIELDS ON SECTION PRIOR TO STACKING.
2. ALL P-CLIPS TO BE INSTALLED ON THE INSIDE OF THE TOWER.
3. TAKE CARE WHEN INSTALLING THE 3rd FACE AS THE INSTALLER WILL NEED TO GO INSIDE THE SECTION.

NOTES:

REV.	REV. BY:	CHK. BY:	DESCRIPTION	DATE

CONFIDENTIAL: ALL INTELLECTUAL PROPERTY RIGHTS HEREIN ARE THE PROPERTY OF TRYLON TSF Inc. ALL DUPLICATION, RECORDING, DISCLOSURE OR USE IS PROHIBITED WITHOUT WRITTEN CONSENT OF TRYLON TSF Inc.

Trylon

CUSTOMER:	SITE:	SCALE: 20.000
DATE: 10 FEB 12	BY: MAW	CHK: HS	APP: JB
TITLE: AWSS ANTI CLIMB INSTALLATION	DRAWING NO. 000001.936.0026	

Back to Agenda

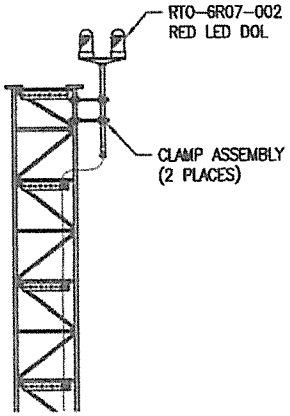

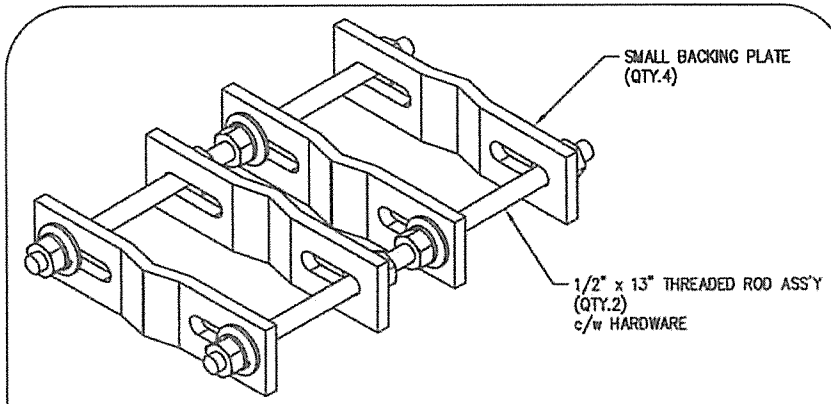

ADJUSTABLE PARALLEL CLAMP ASSEMBLY (5.960.0010.001)

(4)	3.963.0182.001	SMALL BACKING PLATE
(2)	4.963.0019.213	1/2" x 13" THREADED ROD ASS'Y
(4)	1201120	1/2" HEX NUT
(4)	1201121	1/2" LOCK WASHER
(4)	1201122	1/2" FLAT WASHER

DETAIL 1
5.960.0010.001

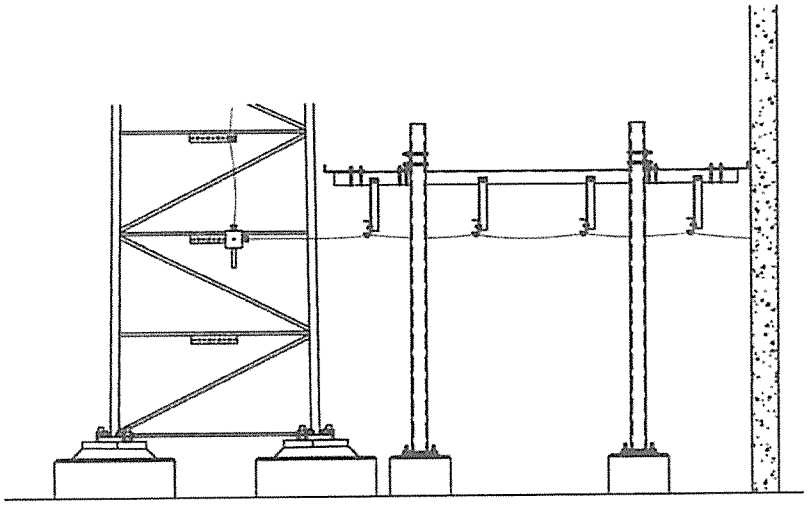

NOTES:

REV.	REV. BY:	CHK. BY:	DESCRIPTION	DATE

CONFIDENTIAL: ALL INTELLECTUAL PROPERTY RIGHTS HEREIN ARE THE PROPERTY OF TRYLON TSF Inc. ALL DUPLICATION, RECORDING, DISCLOSURE OR USE IS PROHIBITED WITHOUT WRITTEN CONSENT OF TRYLON TSF Inc.

Trylon

CUSTOMER: STW	SITE: 0'-150'		SCALE: 35.000
DATE: 12 SEP 12	BY: MAW	CHK: TLD	APP: JB
TITLE: LIGHTING MOUNT			DRAWING NO. 000001.942.1220

Back to Agenda

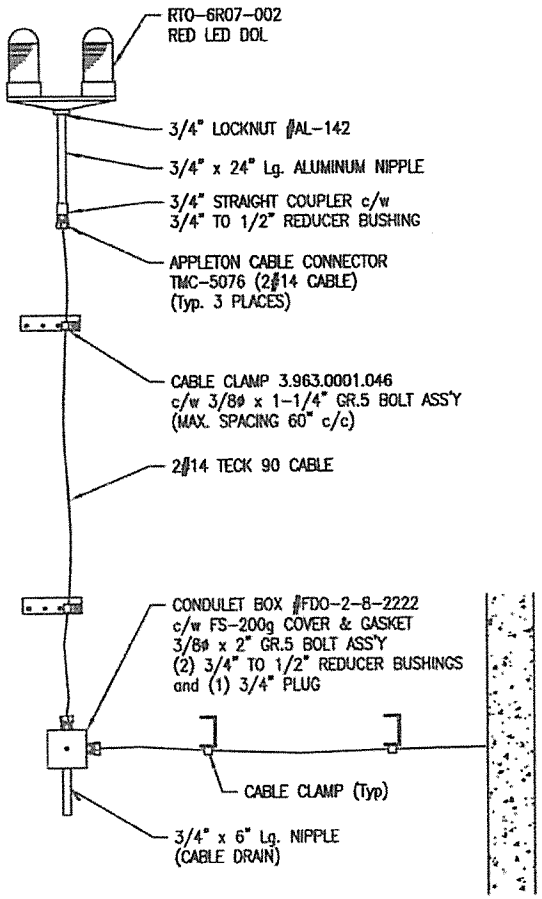

COMPONENT ASSEMBLY

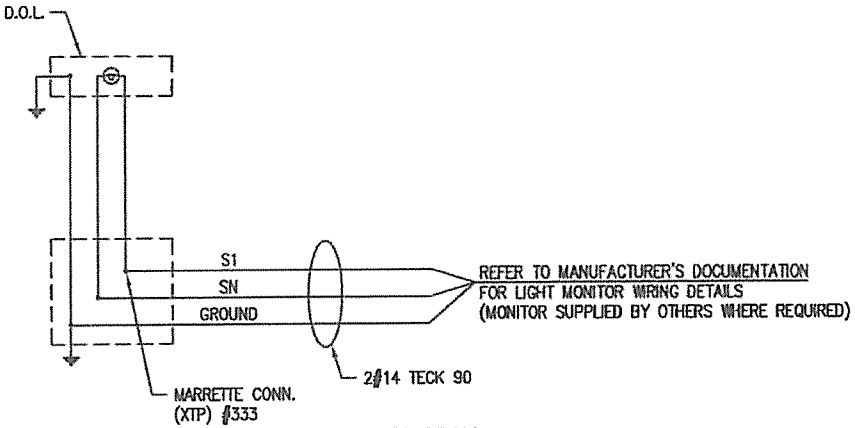

WIRING DIAGRAM

NOTES:

KIT NUMBERS: 4.942.1024.150

FORMULA FOR CALCULATING REQUIRED CABLE LENGTH:
2#14 = (TWR. HT. + 20') + (20' TXBR) + (20' BLDG) + (20' DIST. PANEL)

REV.	REV. BY:	CHK. BY:	DESCRIPTION	DATE

CONFIDENTIAL: ALL INTELLECTUAL PROPERTY RIGHTS HEREIN ARE THE PROPERTY OF TRYLON TSF Inc. ALL DUPLICATION, RECORDING, DISCLOSURE OR USE IS PROHIBITED WITHOUT WRITTEN CONSENT OF TRYLON TSF Inc.

Trylon

CUSTOMER:	SITE:	SCALE:
STW	0'-150'	30.000

DATE:	BY:	CHK:	APP:
12 SEP 12	MAW	TLD	JB

TITLE: AO LIGHTING COMP. & WIRING

DRAWING NO. 000001.942.1024

Back to Agenda

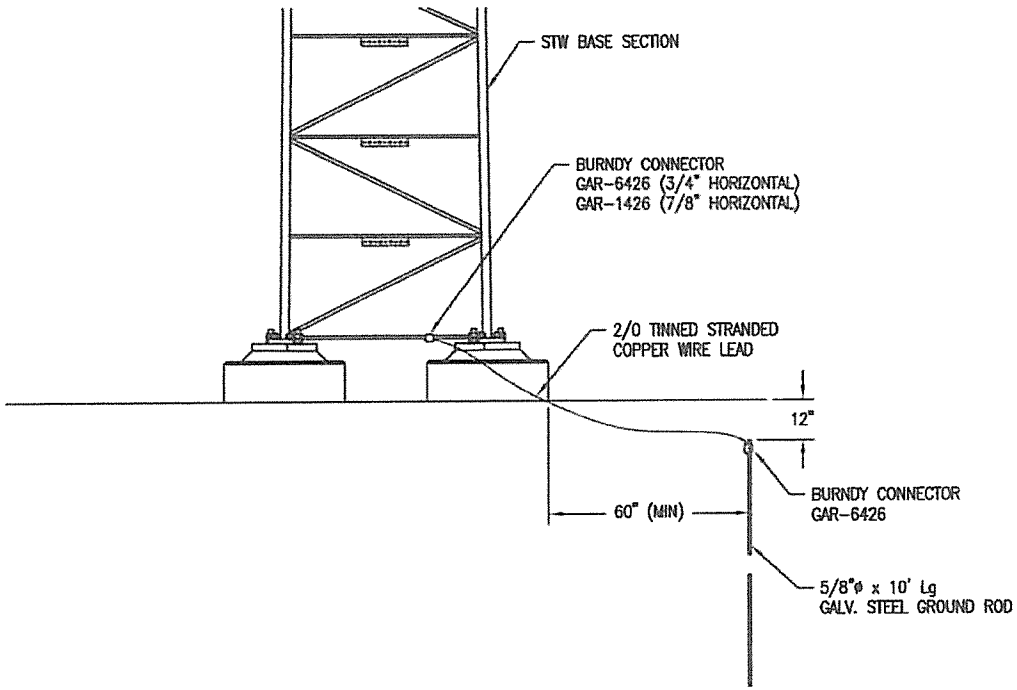

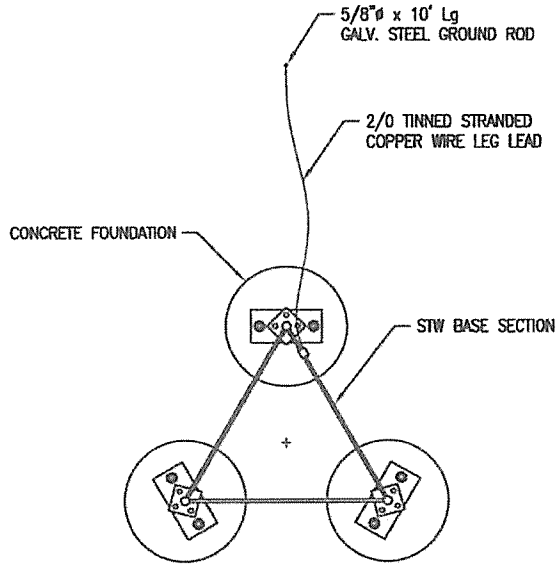

NOTES:

1) ALL GROUND WIRE TO BE 2/0 TINNED STRANDED COPPER WIRE.
2) ALL GROUND RODS ARE TO BE PLACED A MINIMUM OF 5'-0" AND MAXIMUM OF 7'-0" FROM THE TOWER BASE.
3) ALL GROUND RODS TO BE 5/8"ø x 10'-0" Lg. GALVANIZED STEEL.
4) GROUND WIRE TO BE BURIED 1'-0" BELOW GROUND SURFACE.
5) ALL GROUNDING CONNECTIONS ARE TO BE CLEAN AND FREE OF PAINT AT THEIR MATING SURFACES.
6) GROUNDING WIRES MUST ALWAYS BE CONTINUOUS AND TRAVEL IN A "DOWNWARD" DIRECTION FREE FROM SHARP BENDS OR SUDDEN CHANGES IN DIRECTIONS.
7) IDEAL SITE GROUNDING SYSTEM RESISTANCE = 5 OHMS (MAXIMUM OF 50 OHMS).

NOTES:
KIT NUMBERS: 4.912.1178.001

REV.	REV. BY:	CHK. BY:	DESCRIPTION	DATE

CONFIDENTIAL: ALL INTELLECTUAL PROPERTY RIGHTS HEREIN ARE THE PROPERTY OF TRYLON TSF Inc. ALL DUPLICATION, RECORDING, DISCLOSURE OR USE IS PROHIBITED WITHOUT WRITTEN CONSENT OF TRYLON TSF Inc.

Trylon

CUSTOMER:	SITE:	SCALE:
STW	0'-150'	35.000

DATE:	BY:	CHK:	APP:
12 SEP 12	MAW	TLD	JB

TITLE:	DRAWING NO.
SINGLE LEG GROUNDING	000001.912.1178

Back to Agenda

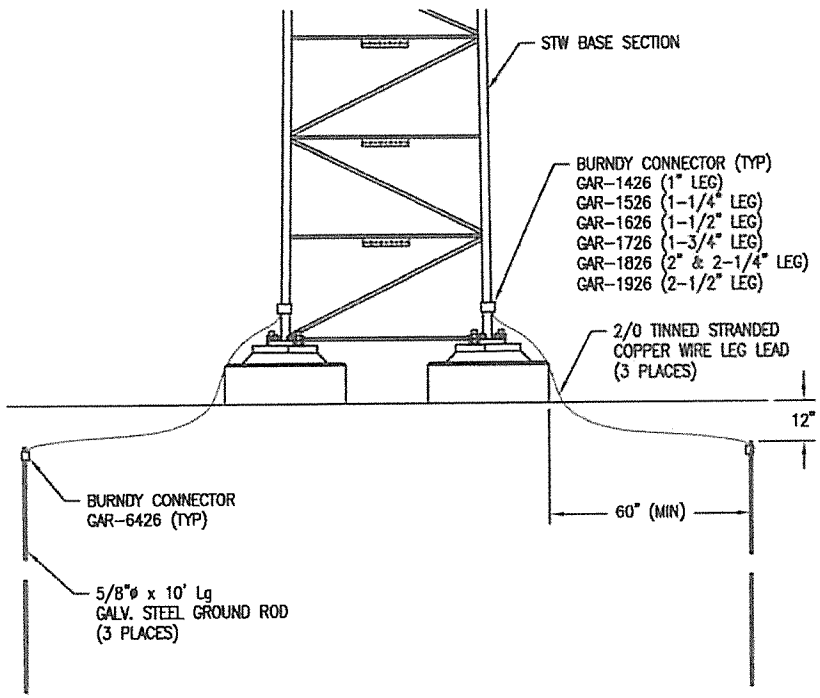

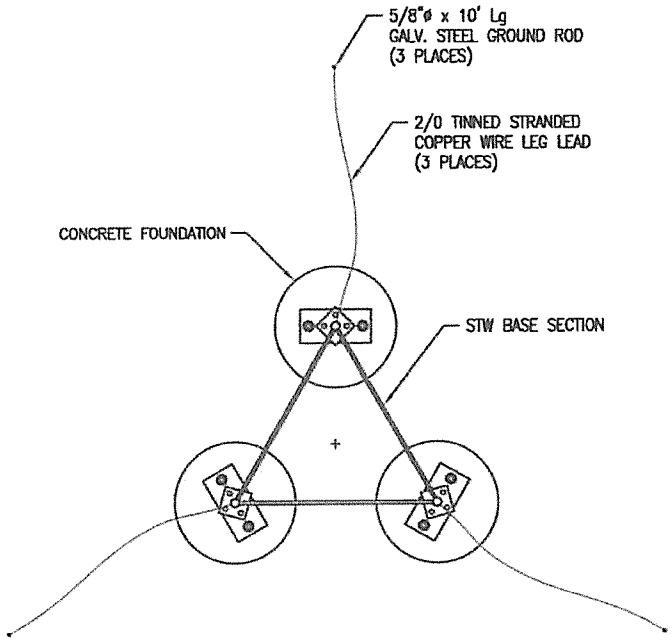

NOTES:

1) ALL GROUND WIRE TO BE 2/0 TINNED STRANDED COPPER WIRE.
2) ALL GROUND RODS ARE TO BE PLACED A MINIMUM OF 5'-0" AND MAXIMUM OF 7'-0" FROM THE TOWER BASE.
3) ALL GROUND RODS TO BE 5/8"ø x 10'-0" Lg. GALVANIZED STEEL.
4) GROUND WIRE TO BE BURIED 1'-0" BELOW GROUND SURFACE.
5) ALL GROUNDING CONNECTIONS ARE TO BE CLEAN AND FREE OF PAINT AT THEIR MATING SURFACES.
6) GROUNDING WIRES MUST ALWAYS BE CONTINUOUS AND TRAVEL IN A "DOWNWARD" DIRECTION FREE FROM SHARP BENDS OR SUDDEN CHANGES IN DIRECTIONS.
7) IDEAL SITE GROUNDING SYSTEM RESISTANCE = 5 OHMS (MAXIMUM OF 50 OHMS).

NOTES:

KIT NUMBERS:

1"ø LEG: 4.912.1177.100
1-1/4"ø LEG: 4.912.1177.125
1-1/2"ø LEG: 4.912.1177.150
1-3/4"ø LEG: 4.912.1177.175
2" & 2-1/4"ø LEG: 4.912.1177.225
2-1/2"ø LEG: 4.912.1177.250

REV.	REV. BY:	CHK. BY:	DESCRIPTION	DATE

CONFIDENTIAL: ALL INTELLECTUAL PROPERTY RIGHTS HEREIN ARE THE PROPERTY OF TRYLON TSF Inc. ALL DUPLICATION, RECORDING, DISCLOSURE OR USE IS PROHIBITED WITHOUT WRITTEN CONSENT OF TRYLON TSF Inc.

Trylon

CUSTOMER:	SITE:	SCALE:
STW	0'-150'	35.000

DATE:	BY:	CHK:	APP:
12 SEP 12	MAW	TLD	JB

TITLE: EIA GROUNDING

DRAWING NO. 000001.912.1177

Back to Agenda

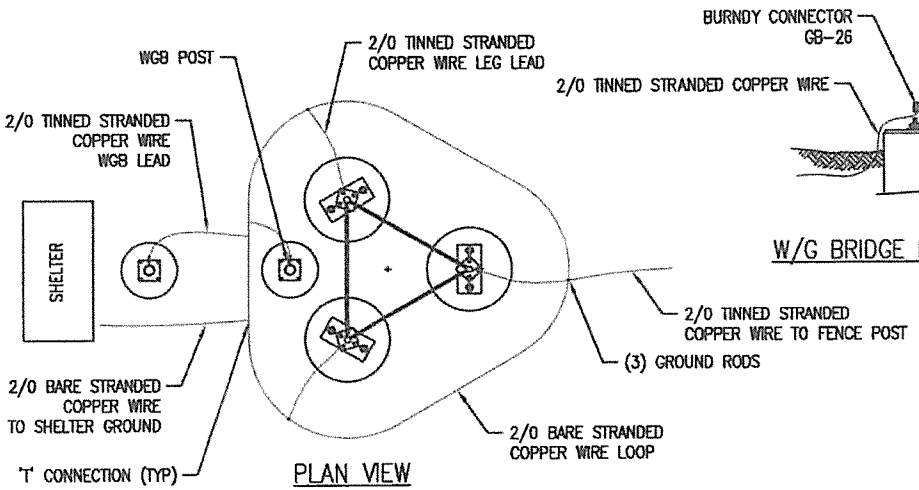

PLAN VIEW

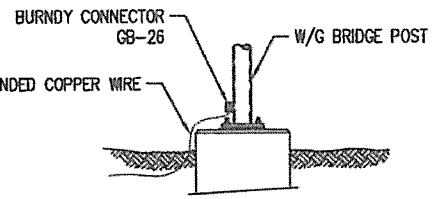

W/G BRIDGE POST GROUNDING

NOTES

1) ALL ABOVE GRADE GROUND WIRE TO BE 2/0 TINNED COPPER WIRE.
2) ALL BELOW GRADE GROUND WIRE TO BE 2/0 BARE STRANDED COPPER WIRE.
3) ALL GROUND RODS TO BE 'COPPERCLAD' MIN 5/8" DIA x 10 FEET LONG.
4) AT GROUND LEVEL, ALL GROUNDING WIRES MUST BE BURIED MINIMUM 12" BELOW FINISHED GRADE OR 6" BELOW THE FROST LINE, WHICHEVER IS GREATER.
5) ALL LOOPS (PERIPHERAL CONDUCTOR) MUST FORM A CLOSED CIRCLE.
6) ALL LOOPS MUST BE A MINIMUM OF 13.5 FEET IN DIAMETER.
7) ALL BELOW GRADE WIRE MUST BE A MIN. OF 24" AWAY FROM ANY FOUNDATION ELEMENT.
8) ALL GROUNDING CONNECTIONS ARE TO BE CLEAN AND FREE OF PAINT AT THEIR MATING SURFACES.
9) IDEAL SITE GROUNDING SYSTEM RESISTANCE = 5 OHMS (MAXIMUM = 50 OHMS)
10) GROUNDING WIRES MUST ALWAYS BE CONTINUOUS AND TRAVEL IN A 'DOWNWARD' DIRECTION FREE FROM SHARP BENDS OR SUDDEN CHANGES IN DIRECTION.
11) NUMBER AND LOCATION OF W/G BRIDGE POSTS MAY VARY.
12) USE "PENETROX" OR EQUIVALENT ANTI-OXIDANT GREASE AT ALL COMPRESSION/MECHANICAL CONNECTIONS.

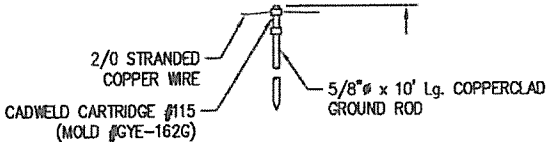

GROUND ROD DETAIL

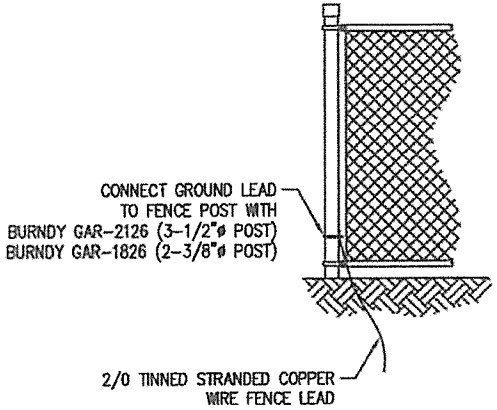

FENCE GROUNDING

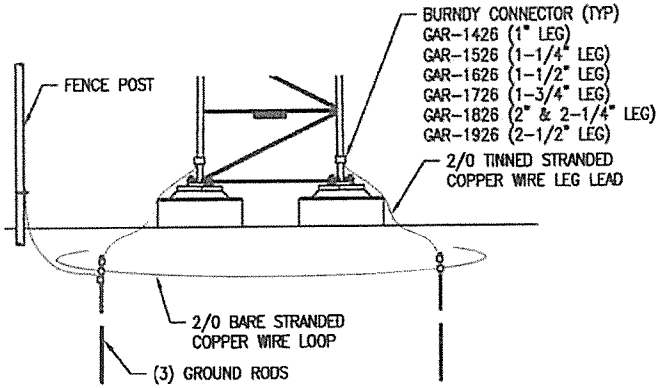

ELEVATION VIEW

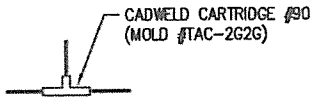

'T' CONNECTION

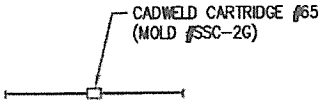

WIRE TO WIRE SPLICE

NOTES:

KIT NUMBERS:

1"ø LEG: 4.912.1176.100
1-1/4"ø LEG: 4.912.1176.125
1-1/2"ø LEG: 4.912.1176.150
1-3/4"ø LEG: 4.912.1176.175
2" & 2-1/4"ø LEG: 4.912.1176.225
2-1/2"ø LEG: 4.912.1176.250

REV.	REV. BY:	CHK. BY:	DESCRIPTION	DATE

CONFIDENTIAL: ALL INTELLECTUAL PROPERTY RIGHTS HEREIN ARE THE PROPERTY OF TRYLON TSF Inc. ALL DUPLICATION, RECORDING, DISCLOSURE OR USE IS PROHIBITED WITHOUT WRITTEN CONSENT OF TRYLON TSF Inc.

Trylon

CUSTOMER:	SITE:	SCALE:
STW	0'-150'	50.000

DATE:	BY:	CHK:	APP:
14 SEP 12	MAW	TLD	JB

TITLE: CSA GROUNDING

DRAWING NO. 000001.912.1176

Back to Agenda

Trylon

May-27-16

Trylon Tower Analysis TA1974-1

Tower Details

Tower Height (ft)	120
Model Designation	W300
Tower Part Number	5.640.0300.120
Tower Line	SuperTitan Weld (AWSS)

Optional Accessories and Services

Description	Quantity	Part Number
Climbing Kit - Welded on Tower Face	N/A	INTEGRAL
Safety Climb Kit - 3/8In Cable - Face Mounted (No Slider)	1	4.99.0305.000
Anti Climb Shield Kit	1	4.936.0026.014
Grounding Kit	1	4.912.1178.001
Lightning Rod - 5' Long Galvanized Steel with Mount	1	4.90.0200.000
TX Line Brackets	N/A	INTEGRAL
Foundation Material	N/A	INTEGRAL
Canada P.Eng Stamped Dwg Tower Profile and Standard Foundation	1	4.77.0101.200
USA P.E. Stamped Dwg Tower Profile and Standard Foundation	1	4.77.0101.100

Back to Agenda

Trylon

May 27, 2016

Trylon Tower Analysis: TA1974-1

The tower analysis was performed based on the wind speed, antenna and line loading parameters provided. Please note that the software used for this analysis depends on users supplying accurate antenna data, wind speed and other critical input parameters. Trylon assumes no liability for inaccurate user assumptions or any tower failures as a result thereof.

Please review this tower set-up to ensure it matches with the final tower design.

Upon completion it was seen that the tower under study, **PASSED** TIA-222-G with the below listed design parameters, and equipment attached.

Trylon Tower	
Tower Height:	120 ft
Model Designation:	W300
Tower Line:	SuperTitanWeld (AWSS)
Part Number:	5.640.0300.120

Project Data	
Site Location:	York County, Maine
Designer Initials:	MS/PS

Design Parameters	
Design Code:	TIA-222-G
Max. Basic Wind Speed:	100 mph
Max. Basic Wind Speed with Ice:	40 mph
Max. Design Ice Thickness:	1.00 in.
Service Wind Speed:	60 mph
Exposure Category:	C (Open terrain)
Topographic Category:	1 (No abrupt changes)
Reliability Category:	II (Substantial hazard)

Tower Loading

Elev. (ft)	Qty	Fixture Type	UPSA[1] (sqft)	TX Line Qty	TX Line Type	Mounted on	Offset (ft)
130	1	ANT150-F6	4.05	1	AVA5-50FX	Leg	6
123	2	ANT150-F2	1.3	2	AVA5-50FX	Leg	6
110	3	A-ANT 11G 24-A / COMPACT+	4.14	3	04-001-55	Leg	1
80	1	ANT150-F2	1.3	1	AVA5-50FX	Leg	6
80	2	ANT480-F2	1.0	2	AVA5-50FX	Leg	6
60	2	ANT150-F2	1.3	2	AVA5-50FX	Leg	6
60	1	ANT480-F2	1.0	1	AVA5-50FX	Leg	6

[1]UPSA: Un-factored Projected Surface Area (each)

Results

Tower with the above noted loading is at **78%** Capacity.
Tower Maximum Tilt/Twist is **0.43°/ 0.48°**.

Factored Leg Foundation Loads		Factored Global Foundation Loads	
Max Download:	127.37 kips	Max Axial:	10.48 kips
Max Uplift:	119.60 kips	Max OTM:	511.82 kipsft
Max Shear:	4.72 kips	Max Shear:	7.24 kips

P.E. Stamped Drawings:

If P.E. Stamped Drawings are required for this tower then we require a Geotechnical Report be provided to ensure a proper foundation design – If one is not available we will assume Normal Dry Soil conditions.

21 South Field Drive – Elmira – ON N3B 0A6 – Canada - Tel: (519)-669-5421 - Fax: (519)-669-8912
www.trylon.com

Back to Agenda

120' W300 SUPERTITAN WELD (5.640.0300.120)

MAX. ALLOWABLE ANTENNA LOADING (EIA-222-G)

IMPORTANCE CLASS 1			IMPORTANCE CLASS 2		
WIND: 90mph	WIND: 110mph	WIND: 130mph	WIND: 90mph	WIND: 110mph	WIND: 130mph
94 sq.ft.	52 sq.ft.	32 sq.ft.	78 sq.ft.	46 sq.ft.	26 sq.ft.

NOTES:
1. IMPORTANCE CLASS 1 BASED ON 30mph SERVICE WIND SPEED, 0" OF RADIAL ICING. LOAD IS CENTRALLY BALANCED ABOVE TOWER TOP, NO Tx LINES CONSIDERED.
2. IMPORTANCE CLASS 2 BASED ON 40mph SERVICE WIND SPEED, 0.75" OF RADIAL ICING. LOAD IS CENTRALLY BALANCED ABOVE TOWER TOP, NO Tx LINES CONSIDERED.

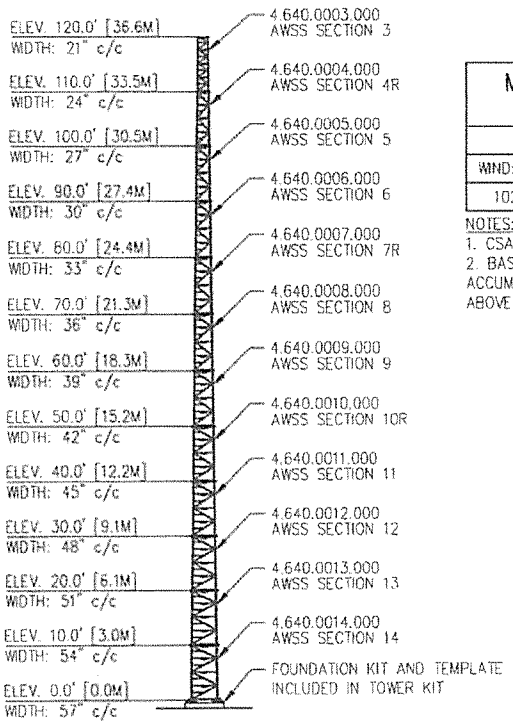

MAX. ALLOWABLE ANTENNA LOADING (CSA S37-01)

IMPORTANCE CLASS 1		
WIND: 350 Pa	WIND: 450 Pa	WIND: 550 Pa
102 sq.ft.	70 sq.ft.	52 sq.ft.

NOTES:
1. CSA S37-01 CLASS 1.
2. BASED ON 25mm OF RADIAL ICE ACCUMULATION. LOAD IS CENTRALLY BALANCED ABOVE TOWER TOP, NO Tx LINES CONSIDERED.

FOUNDATION DETAIL (NORMAL DRY SOIL)

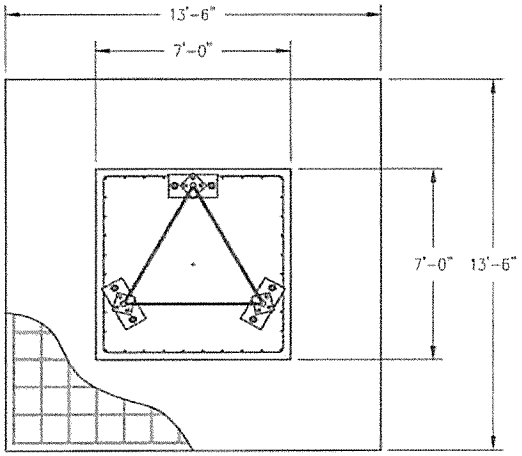

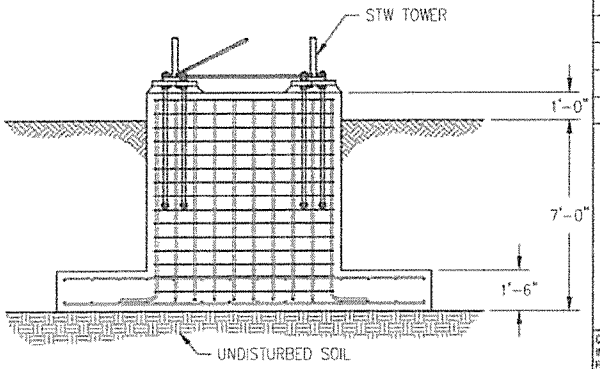

REV.	BY: REV.	BY: CHK.	DESCRIPTION	DATE

REFERENCE DRAWINGS:

DRAWING NUMBER	DRAWING NUMBER

CONFIDENTIAL: ALL INTELLECTUAL PROPERTY RIGHTS HEREIN ARE THE PROPERTY OF TRYLON INC. ALL DUPLICATION, RECORDING, DISCLOSURE OR USE IS PROHIBITED WITHOUT WRITTEN CONSENT OF TRYLON INC.

Trylon

DRAWING NO. 640.0300.120

CUSTOMER: | SITE: | SCALE: 250.00

DATE: 18 SEP 12 | BY: MAW | CHK: | APP:

TITLE: 120' W300 STW PROFILE

NOTES:

Back to Agenda

FOUNDATION NOTES:

GENERAL:

1) THE CONTRACTOR SHALL FIELD CHECK ALL DIMENSIONS AND DETAILS BEFORE PROCEEDING WITH THE WORK.
2) ALL WORKMANSHIP SHALL BE IN ACCORDANCE WITH THE LATEST ISSUE OF ACI STANDARDS.
3) FOUNDATIONS DESIGNED IN ACCORDANCE WITH EIA-222-F DEFINITION OF A NORMAL DRY SOIL HAVING AN ALLOWABLE BEARING CAPCITY OF 3500 PSF.
4) THE TOWER BASE PAD SHALL BE PLACED AGAINST UNDISTURBED SOIL.

CONCRETE:

1) CONCRETE CONSTRUCTION SHALL CONFORM TO THE REQUIREMENTS OF STANDARD ACI 318-95.
2) CONCRETE SHALL HAVE A MINIMUM COMPRESSIVE STRENGTH AT 28 DAYS OF NOT LESS THAN 4000 PSI.
3) CONCRETE SHALL CONTAIN AN AIR ENTRAINING AGENT. TOTAL AIR CONTENT TO BE 5% TO 7% , FOR THE PARTICULAR SIZE OF AGGREGATE BEING USED. THE AIR ENTRAINING AGENT SHALL BE COMPATIBLE WITH THE WATER REDUCING AGENT.
4) THE MAXIMUM SIZE OF COARSE AGGREGATE SHALL BE 3/4".
5) THE USE OF CALCIUM CHLORIDE OR ACCELERATING ADMIXTURES IS PROHIBITED.
6) SLUMP SHALL BE 3" +/- 1".
7) IF THE AIR TEMPERATURE IS 41 DEGREES F OR LESS, THE TEMPERATURE OF THE CONCRETE AT TIME OF PLACING, SHALL BE BETWEEN 59 AND 86 DEGREES F.
8) CHAMFER EXPOSED CORNERS OF CONCRETE (APPROX 3/4").
9) PROVIDE EFFECTIVE MEANS OF MAINTAINING THE TEMPERATURE OF CONCRETE IN PLACE AT A MINIMUM OF 50 DEGREES C AND A MAXIMUM OF 86 DEGREES F FOR THREE DAYS AFTER PLACING. WHEN THE MEAN DAILY AIR TEMPERATURE IS LESS THAN 41 DEGREES F PROVIDE PROTECTION FOR NEWLY PLACED CONCRETE BY MEANS OF SUITABLE ENCLOSURES OR RAISED COVERINGS, HEAT AND INSULATION.
10) ALL GROUT SHALL BE NON-FERROUS AND NON SHRINK WITH A MINIMUM COMPRESSIVE STRENGTH OF 5000 PSI AT 28 DAYS, EDGES GROUT SHALL BE TAPERED OFF AT 45°.
11) ALL CONCRETE TO BE TYPE 10 NORMAL PORTLAND CEMENT.

REINFORCEMENT:

1) CLEAN REINFORCEMENT OF ANY LOOSE SCALE, DIRT OR OTHER COATINGS WHICH WOULD DESTROY OR REDUCE BONDING. REJECT BARS WITH KINKS OR BENDS NOT SHOWN ON THIS DRAWING.
2) ALL REINFORCEMENT SHALL HAVE A MINIMUM OF 3" CONCRETE COVER.
3) REINFORCING STEEL SHALL BE DEFORMED BARS CONFORMING WITH ASTM A615 (GRADE 60)

BACKFILLING:

1) BACKFILL SHALL BE PLACED IN THIN LIFTS (MAXIMUM 6") AND COMPACTED TO A MINIMUM OF 95 PERCENT OF STANDARD PROCTOR MAXIMUM DRY DENSITY. IN THE EVENT THAT EXCAVATED MATERIALS ARE NOT SUITABLE FOR BACKFILL, IT SHALL BE THE RESPONSIBILITY OF THE CONTRACTOR TO SUPPLY AND COMPACT SUITABLE CLEAN MATERIAL TO MEET THAT REQUIREMENT.

STANDARDS:

1) FOUNDATIONS AND ANCHORS DESIGNED IN ACCORDANCE WITH EIA-222-F.
2) CONCRETE WORK IN ACCORDANCE WITH ACI 318-95.
3) REINFORCEMENT FOR CONCRETE IN ACCORDANCE WITH ACI 318-95.

REV.	REV. BY:	CHK. BY:	DESCRIPTION	DATE

NOTES:

CONFIDENTIAL: ALL INTELLECTUAL PROPERTY RIGHTS HEREIN ARE THE PROPERTY OF TRYLON TSF Inc. ALL DUPLICATION, RECORDING, DISCLOSURE OR USE IS PROHIBITED WITHOUT WRITTEN CONSENT OF TRYLON TSF Inc.

Trylon

CUSTOMER:	SITE:		
STW		1.000	
DATE: 14 SEP 12	BY: MAW	CHK: TLD	APP: JB

TITLE: EIA FOUNDATION NOTES

DRAWING NO. 000001.906.0026

Back to Agenda

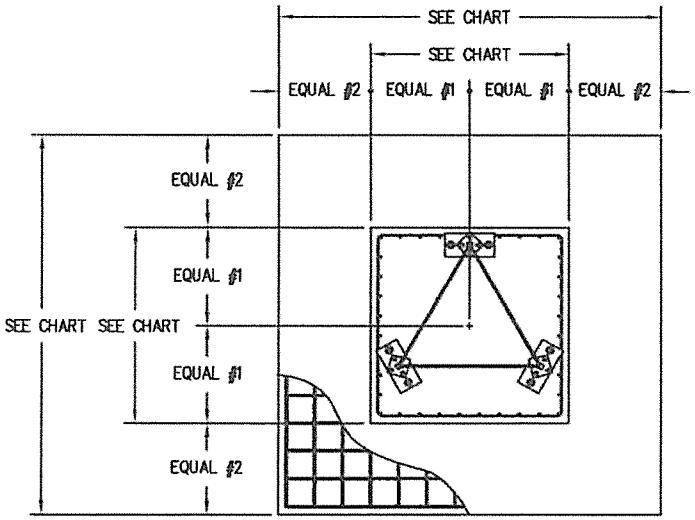

SUPERTITAN WELD (STW) CONCRETE FOUNDATION – ALL TOWER SECTIONS

SINGLE PAD DESIGN WITH 1 PIER

BOTTOM SECTION	PAD SIZE	PIER SIZE	EXCAVATION DEPTH	VERTICAL REBAR	FND INTERFACE KIT
1	6'–6" x 6'–6"	3'–6" x 3'–6"	5'–6"	(20) 20M (#6)	4.906.0020.006
2					4.906.0020.005
3		4'–0" x 4'–0"			4.906.0020.004
4	8'–0" x 8'–0"	4'–6" x 4'–6"	6'–0"	(30) 20M (#6)	
5					
6		5'–0" x 5'–0"			4.906.0020.003
7	9'–6" x 9'–6"	5'–0" x 5'–0"	6'–6"	(30) 20M (#6)	
8		5'–6" x 5'–6"			
9	10'–0" x 10'–0"	5'–6" x 5'–6"	6'–6"	(36) 20M (#6)	4.906.0020.002
10	11'–0" x 11'–0"	6'–0" x 6'–0"	6'–6"	(36) 20M (#6)	
11					
12	12'–6" x 12'–6"	6'–6" x 6'–6"	7'–0"	(36) 25M (#8)	4.906.0020.001
13					
14	13'–6" x 13'–6"	7'–0" x 7'–0"	7'–0"	(36) 25M (#8)	
15					

NOTES:
1. REFER TO DWG 000001.906.0025 FOR CSA FOUNDATION NOTES.
2. REFER TO DWG 000001.906.0026 FOR EIA FOUNDATION NOTES.
3. ALWAYS INSTALL ANCHOR RODS USING SUPPLIED TEMPLATE.

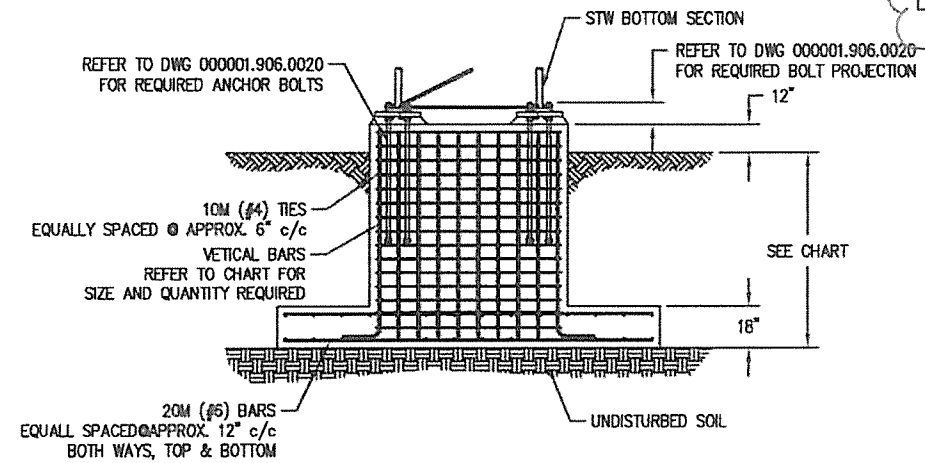

BOTTOM SECTION #15

NOTES:

REV.	REV. BY:	CHK. BY:	DESCRIPTION	DATE

CONFIDENTIAL: ALL INTELLECTUAL PROPERTY RIGHTS HEREIN ARE THE PROPERTY OF TRYLON TSF Inc. ALL DUPLICATION, RECORDING, DISCLOSURE OR USE IS PROHIBITED WITHOUT WRITTEN CONSENT OF TRYLON TSF Inc.

Trylon

CUSTOMER:	SITE:	SCALE:
STW		50.000

DATE:	BY:	CHK:	APP:
14 SEP 12	MAW	TLD	JB

TITLE:	DRAWING NO.
REGULAR NDS FOUNDATION	000001.906.0024

Back to Agenda

ITEM	PART NO.	DESCRIPTION	QTY.	WEIGHT
1	MF-130	DIRECT BURIAL PIPE COLUMN, 13' 4"	2	101.38 LBS
2	WB-CY110	SAFETY GRATING 12" X 10'	1	70.00 LBS
3	WBK110BHK	HARDWARE KIT (ITEMS 4-16)	1	
4	PC-034	PIPE CAP 3-1/2"	2	0.94 LBS
5	WBLB123.07	12" WAVEGUIDE BRIDGE SUPPORT BRACKET	2	4.71 LBS
6	GUB-4356	1/2" X 3-5/8" X 6" GALV U-BOLT KIT	4	0.83 LBS
7	WB-JB-6	1/2" J-BOLT	4	0.50 LBS
8	GWF-04	1/2" GALV FLAT WASHER	4	0.02 LBS
9	GWL-04	1/2" GALV LOCK WASHER	4	0.01 LBS
10	GN-04	1/2" GALV HEX NUT	4	0.04 LBS
11	GB-03205	3/8" X 2" GALV BOLT KIT	9	0.27 LBS
12	MT-387	SQUARE WASHER, 1-1/2" X 1-5/8" W/ 7/16" HOLE	18	0.12 LBS
13	GWF-03	3/8" GALV FLAT WASHER	9	0.01 LBS
14	WBT243.01	VERTICAL TRAPEZE SECTION	3	2.53 LBS
15	GB-03105	3/8" X 1" GALV BOLT KIT	18	0.27 LBS
16	WBT123.02	12" HORIZONTAL TRAPEZE SECTION	9	1.46 LBS

REVISIONS				
REV.	ZONE	DESCRIPTION	BY	DATE
A		INITIAL RELEASE	ACG	10/08/02
B		UPDATE PART LIST	ACG	04/04/03
C		UPDATE PART LIST	ACG	05/14/04
D		UPDATE PART LIST	ACG	07/01/04
E		REDRAWN IN SOLIDWORKS	ACG	05/20/05
F		UPDATE SUPPORT BRACKET	ACG	08/28/07
G		UPDATE HARDWARE KIT QTY	ACG	04/09/09

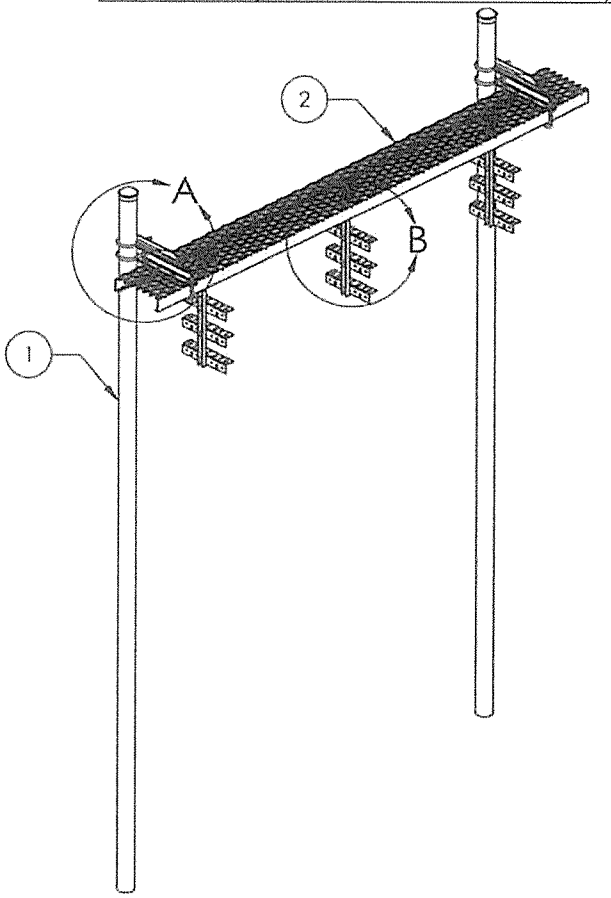

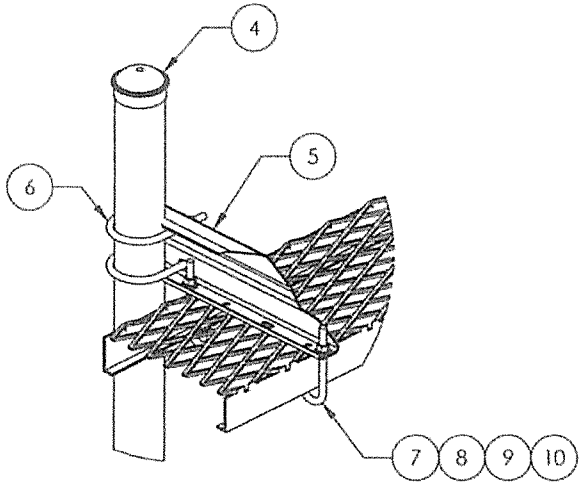

DETAIL A

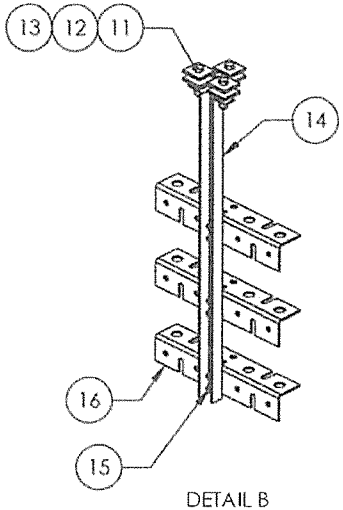

DETAIL B

DO NOT SCALE THIS PRINT	AW		WB-K110-B
	G		ANDREW ORLAND PARK, IL 60462 U.S.A.

Back to Agenda

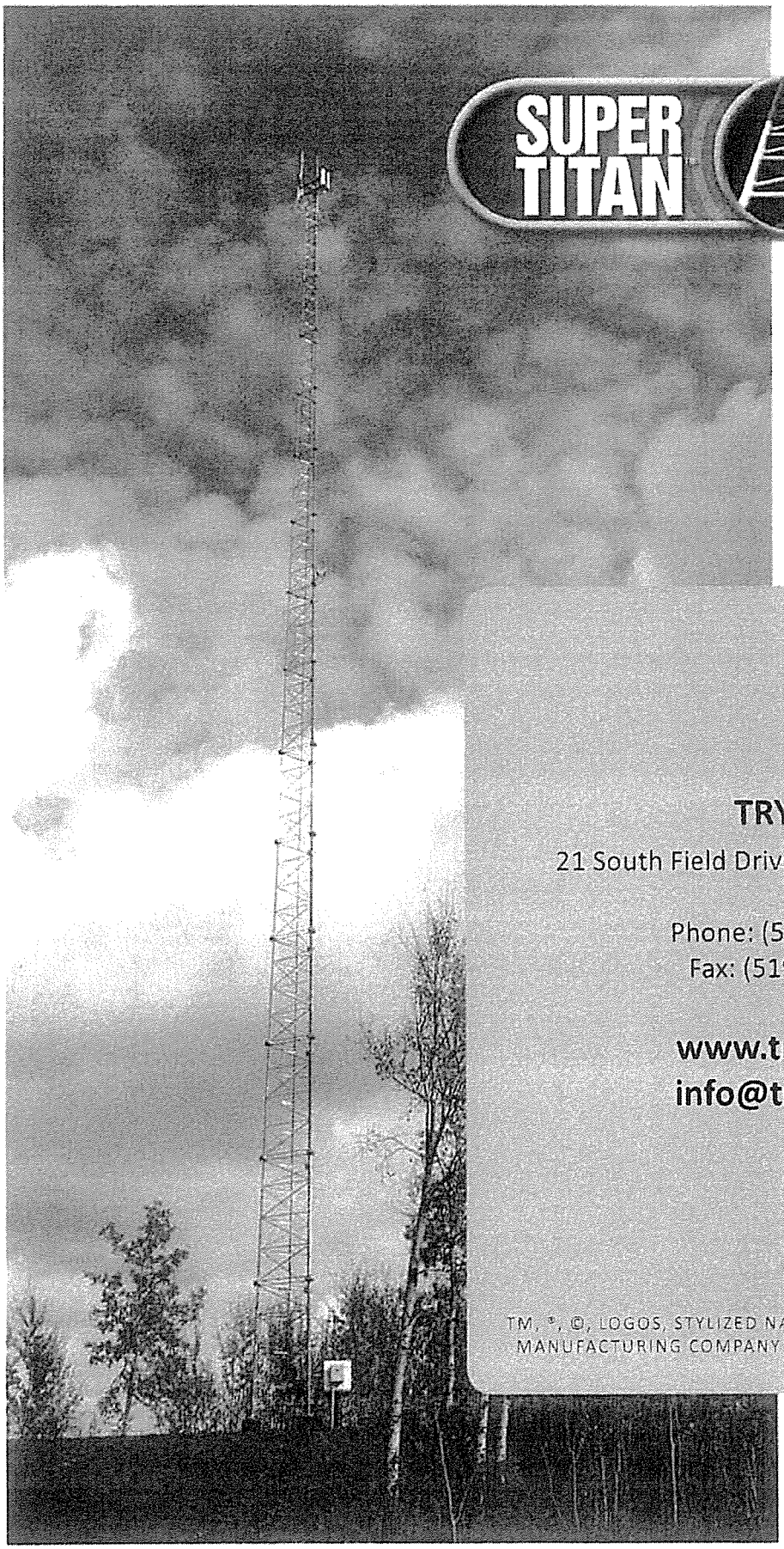

SUPER TITAN WELD

TRYLON®

21 South Field Drive, Elmira, ON N3B 0A6

Phone: (519) 669-5421
Fax: (519) 669-8912

www.trylon.com
info@trylon.com

TM, ®, ©, LOGOS, STYLIZED NAMES ARE TRADEMARKS OF TRYLON MANUFACTURING COMPANY LTD. © 2013 PRINTED IN CANADA

Trylon

www.trylon.com

Back to Agenda

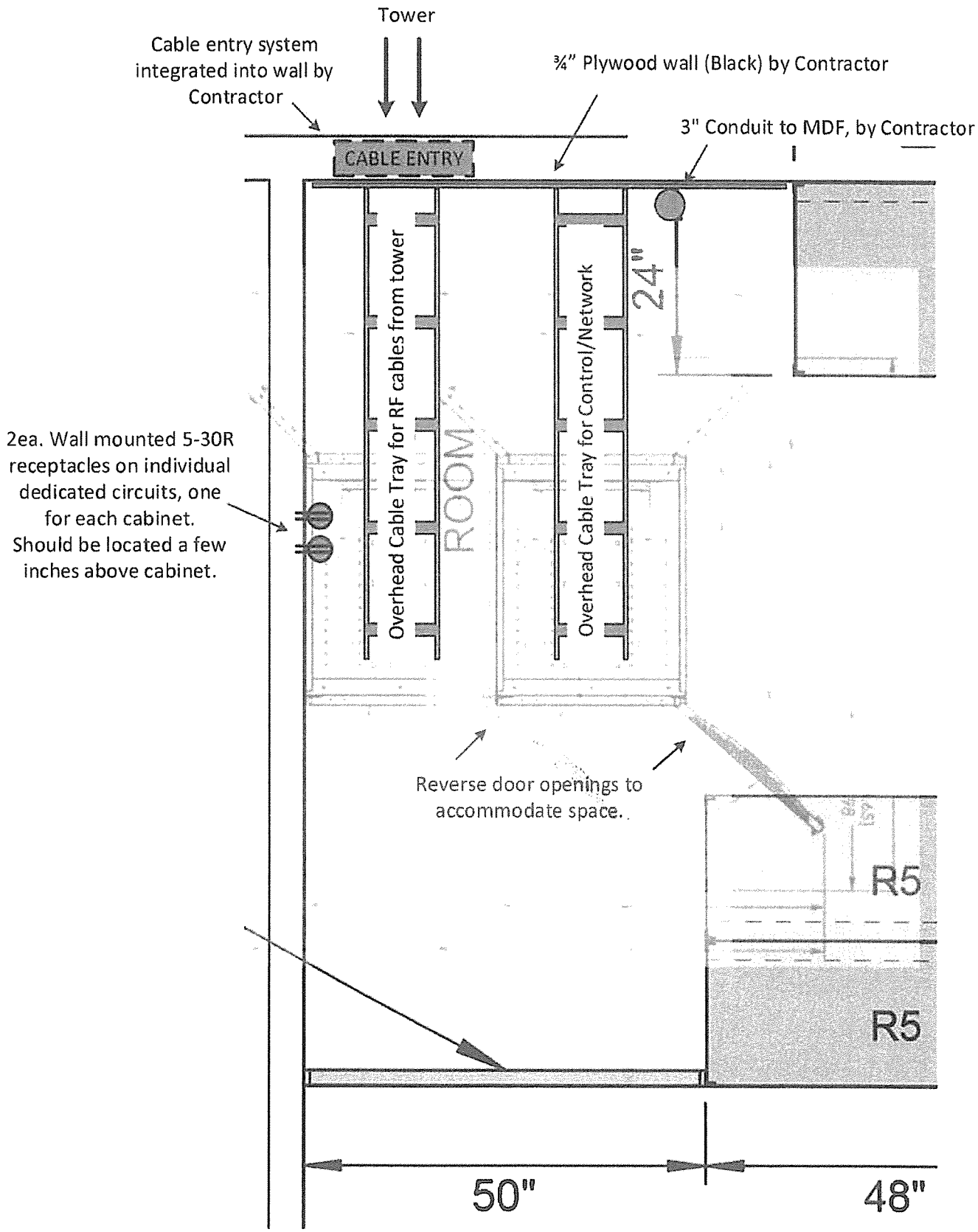

York Police Department

Radio Room Markup Drawing – 9/22/2016, 725 v1

2-Way COMMUNICATIONS DIVISION

Back to Agenda

MODELS:

SR42UBSD1032 / SR42UBSDEXP1032

SmartRack™ Shallow-Depth Rack Enclosure

- 42 Rack Units
- 3000 lb Stationary Load Capacity
- 2250 lb Rolling Load Capacity
- Rolling Casters
- Locking Doors and Side Panels
- Standard 19-inch Rack Width
- Toolless Mounting Slots
- Adjustable Rails with Easy-View Depth Index
- Airflow Exceeds Server OEM Requirements
- Integrated Baying Tabs
- #10-32 Threaded Round Hole Mounting

- A Adjustable Mounting Rails (4)
- B Adjustable PDU Mounting Rails with Toolless Mounting Slots (2) (Hold up to 4 vertical PDUs.)
- C Roof Panel (Removable)
- D Front Door (Lockable/Removable/Reversible)
- E Split Rear Doors (2) (Lockable/Removable)
- F Side Panels (4) (Lockable/Removable; not included with SR42UBSDEXP1032.)
- G Rolling Casters (4)
- H Levelers (4)
- I Keys (For doors and side panels.)

Also Includes: Owner's manual, 2 shipping/stabilizing brackets and #10-32 equipment mounting screws.

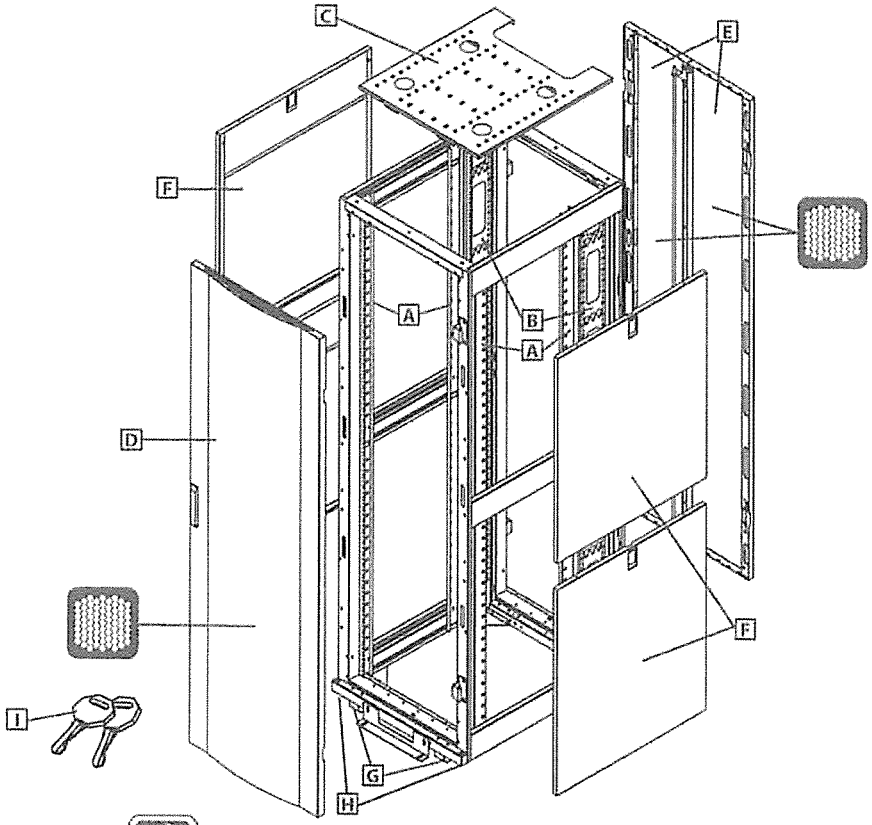

Specifications

Model	SR42UBSD1032
Rack Spaces	42U
Stationary Load Capacity	3000 lb (1363 kg)
Rolling Load Capacity	2250 lb (1022 kg)
Unit Dimensions (H x W x D)	78.5 x 23.63 x 32.5 in (1994 x 600 x 826 mm)
Shipping Dimensions (H x W x D)	85 x 26 x 34.25 in (2159 x 660 x 870 mm)
Unit Weight	215 lb (97.5 kg)
Shipping Weight	265 lb (120.2 kg)
Certifications	EIA-310-E, IEC 60297-3-100, DIN 41494, UL 60950, RoHS, NOM, IP20, PCI-DSS
Model	**SR42UBSDEXP1032** (Without side panels.)
Unit Weight	150 lb (68 kg)
Shipping Weight	200 lb (90.7 kg)

Tripp Lite has a policy of continuous improvement. Specifications are subject to change without notice.

Also Available: Shock pallet models with special packaging to facilitate equipment pre-installation and reshipment to final site. Heavy-duty shock pallet holds up to 1250 lb (567 kg), including the weight of the enclosure and pre-installed equipment. Add "SP1" to model numbers above to order shock pallet model.

- Enclosures ship fully assembled for rapid deployment, but can be knocked down for easy reassembly in confined spaces
- Modular design optimized for quick configuration and reconfiguration
- Ideal for rackmount server, network and telecom applications

SEE NEXT PAGE FOR DETAILED UNIT MEASUREMENTS

TRIPP·LITE
1111 W. 35th Street
Chicago, IL 60609 USA
773.869.1234
www.tripplite.com

Back to Agenda

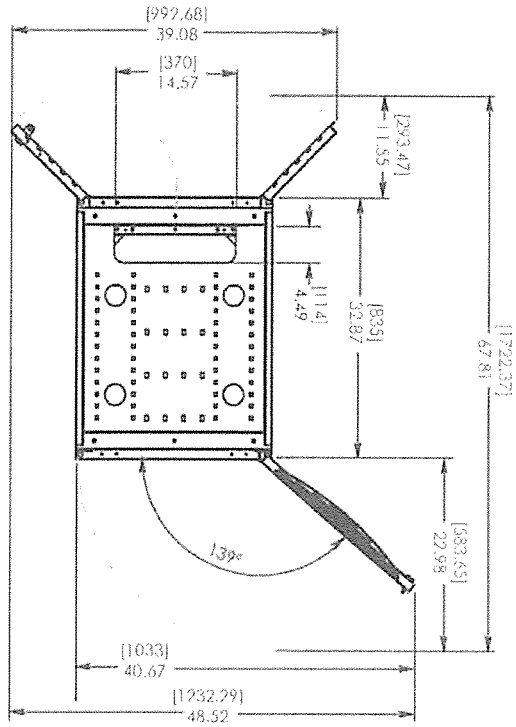

TOP VIEW

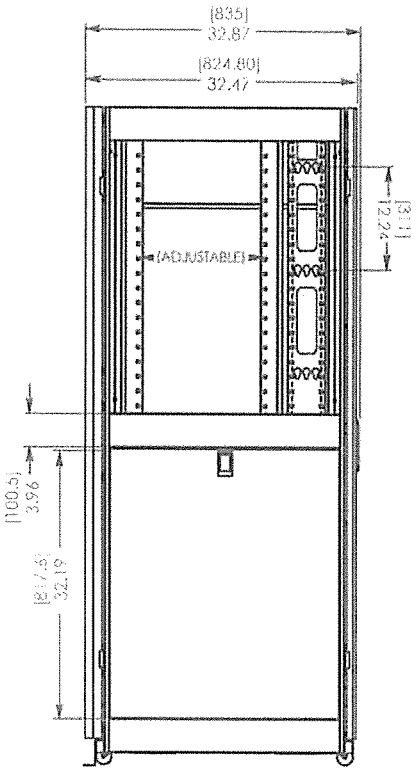

SIDE VIEW

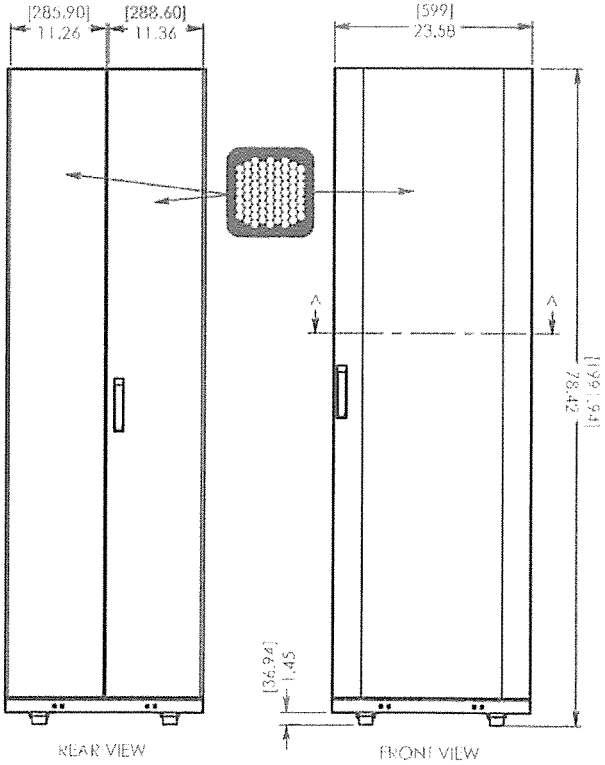

REAR VIEW

FRONT VIEW

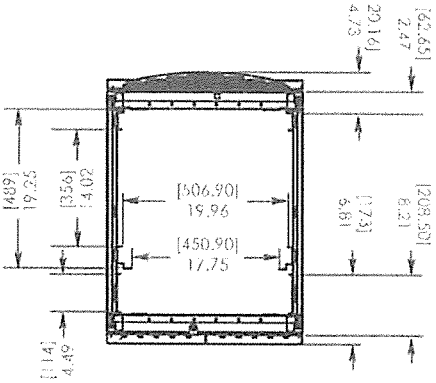

CROSS SECTION A

MODELS:

SR42UBSD1032
SR42UBSDEXP1032

TRIPP·LITE

Dimensions: [mm] INCHES

Tripp Lite has a policy of continuous improvement. Specifications are subject to change without notice.

Back to Agenda

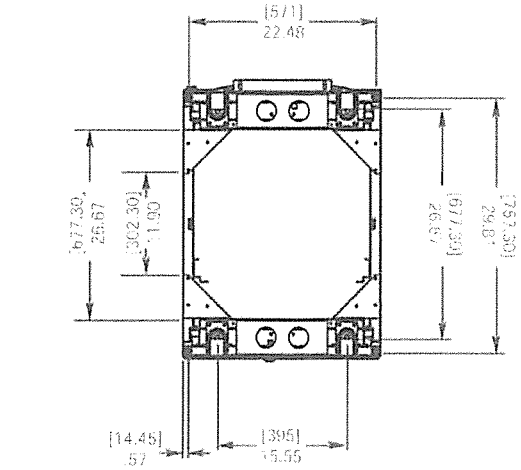

BOTTOM VIEW

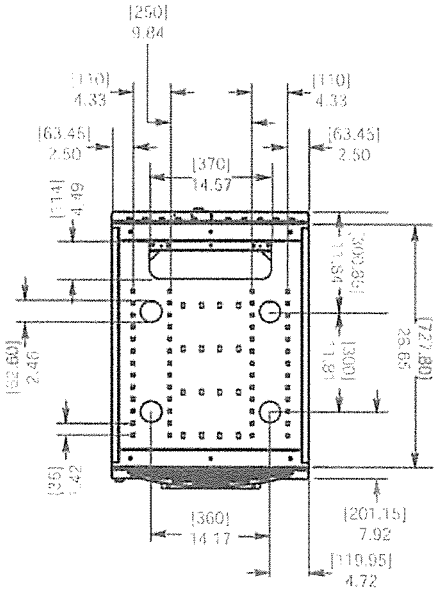

TOP VIEW

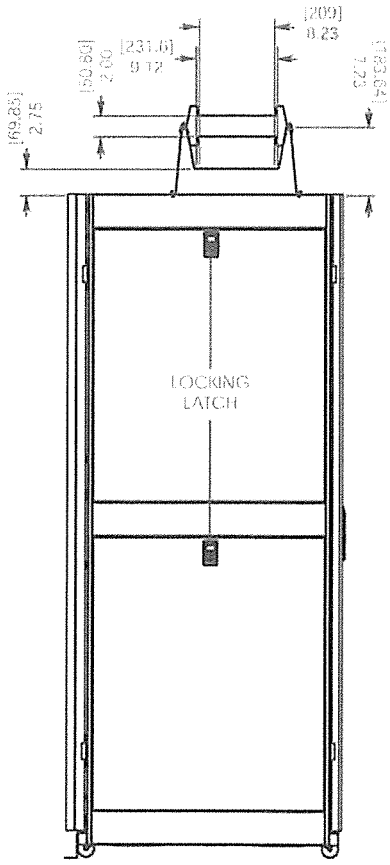

SIDE VIEW

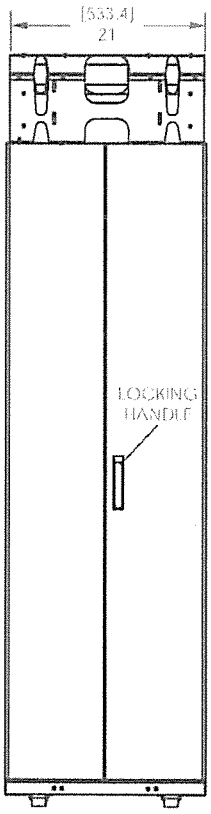

REAR VIEW

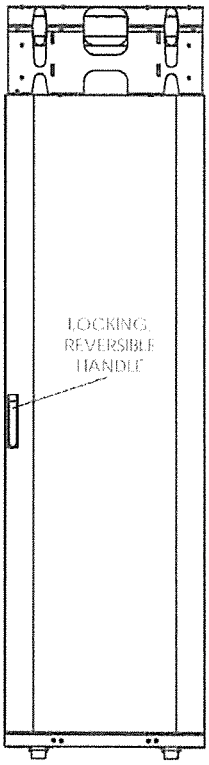

FRONT VIEW

OPTIONAL **SRCABLETRAY** AND **SRCABLETRAYEXP** CABLE MANAGEMENT ACCESSORIES SHOWN (MOUNTING POSITION ADJUSTS TO ACCOMMODATE A WIDE RANGE OF APPLICATIONS)

MODELS:

SR42UBSD1032
SR42UBSDEXP1032

TRIPP·LITE

1111 W. 35th Street
Chicago, IL 60609 USA
773.869.1234
www.tripplite.com

Dimensions: [mm] INCHES

Tripp Lite has a policy of continuous improvement. Specifications are subject to change without notice.

Copyright © 2013 Tripp Lite.

Back to Agenda

Concrete Foundation Details

SUPER TITAN KD

For towers with bottom sections #13 to #21
Single-pad design with three piers
(Normal dry soil)

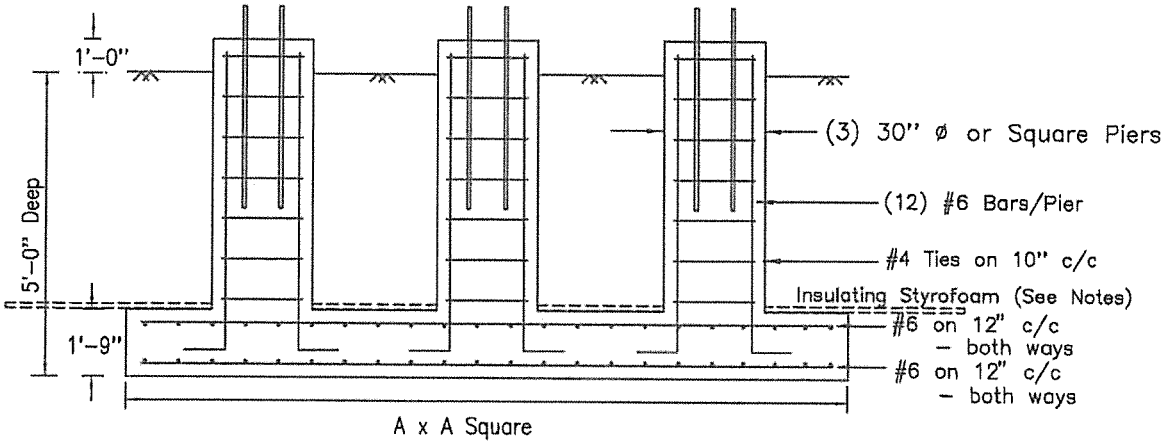

(0" Offset Tower Center to Foundation Center)

Base Section #	A (ft)	Round Pier Concrete Vol
#13	12'-0"	11.4
#14	12'-6"	12.2
#15	13'-6"	13.9
#16	14'-0"	14.7
#17	14'-6"	15.7
#18	15'-0"	16.6
#19	16'-0"	18.6
#20	17'-0"	20.8
#21	18'-0"	23.0

Please email **info@trylon.com** for full foundation installation details, including foundation notes.

NOTES:
Concrete volume in cubic yards.
Add 0.5 cubic yards to that shown for square piers.
Theoretical concrete volumes given. Add 10% to that given when ordering the concrete.

FOUNDATION NOTES:

GENERAL:
1) ALL WORKMANSHIP AND MATERIALS SHALL BE IN ACCORDANCE WITH APPLICABLE LOCAL STANDARDS.
2) FOUNDATIONS DESIGNED FOR NORMAL DRY SOIL CONDITIONS
3) THE TOWER BASE PAD SHALL BE PLACED AGAINST UNDISTURBED SOIL.

CONCRETE:
1) CONCRETE SHALL HAVE A MINIMUM COMPRESSIVE STRENGTH AT 28 DAYS OF NOT LESS THAN 4000 psi.
2) CONCRETE SHALL CONTAIN AN AIR ENTRAINING AGENT.
3) THE MAXIMUM SIZE OF COARSE AGGREGATE SHALL BE 3/4 in. SLUMP SHALL BE 3 in +/- 1 in
4) ALL GROUT SHALL BE NON-FERROUS AND NON SHRINK WITH A MINIMUM COMPRESSIVE STRENGTH OF 5000 psi AT 28 DAYS, EDGES GROUT SHALL BE TAPERED OFF AT 45°.

REINFORCEMENT:
1) ALL REINFORCEMENT SHALL HAVE A MINIMUM OF 3 in CONCRETE COVER.
2) REINFORCING STEEL SHALL BE DEFORMED BARS WITH A MINIMUM YIELD OF 60 ksi.

BACKFILLING:
1) BACKFILL SHALL BE PLACED IN THIN LIFTS (MAXIMUM 6 in) AND COMPACTED TO A MINIMUM OF 95 PERCENT OF STANDARD PROCTOR MAXIMUM DRY DENSITY. IN THE EVENT THAT EXCAVATED MATERIALS ARE NOT SUITABLE FOR BACKFILL, IT SHALL BE THE RESPONSIBILITY OF THE CONTRACTOR TO SUPPLY AND COMPACT SUITABLE CLEAN MATERIAL TO MEET THAT REQUIREMENT.

INSULATION:
1) WHERE FROST PENETRATION DEPTHS EXCEED 6 ft, PLACE INSULATING STRYOFOAM ON SLAB EXTENDING 3 ft PAST THE EDGE OF THE SLAB. HIGHLOAD 40 INSULATION BY DOW CHEMICALS IS RECOMMENDED.

All prices in U.S. dollars.

Back to Agenda

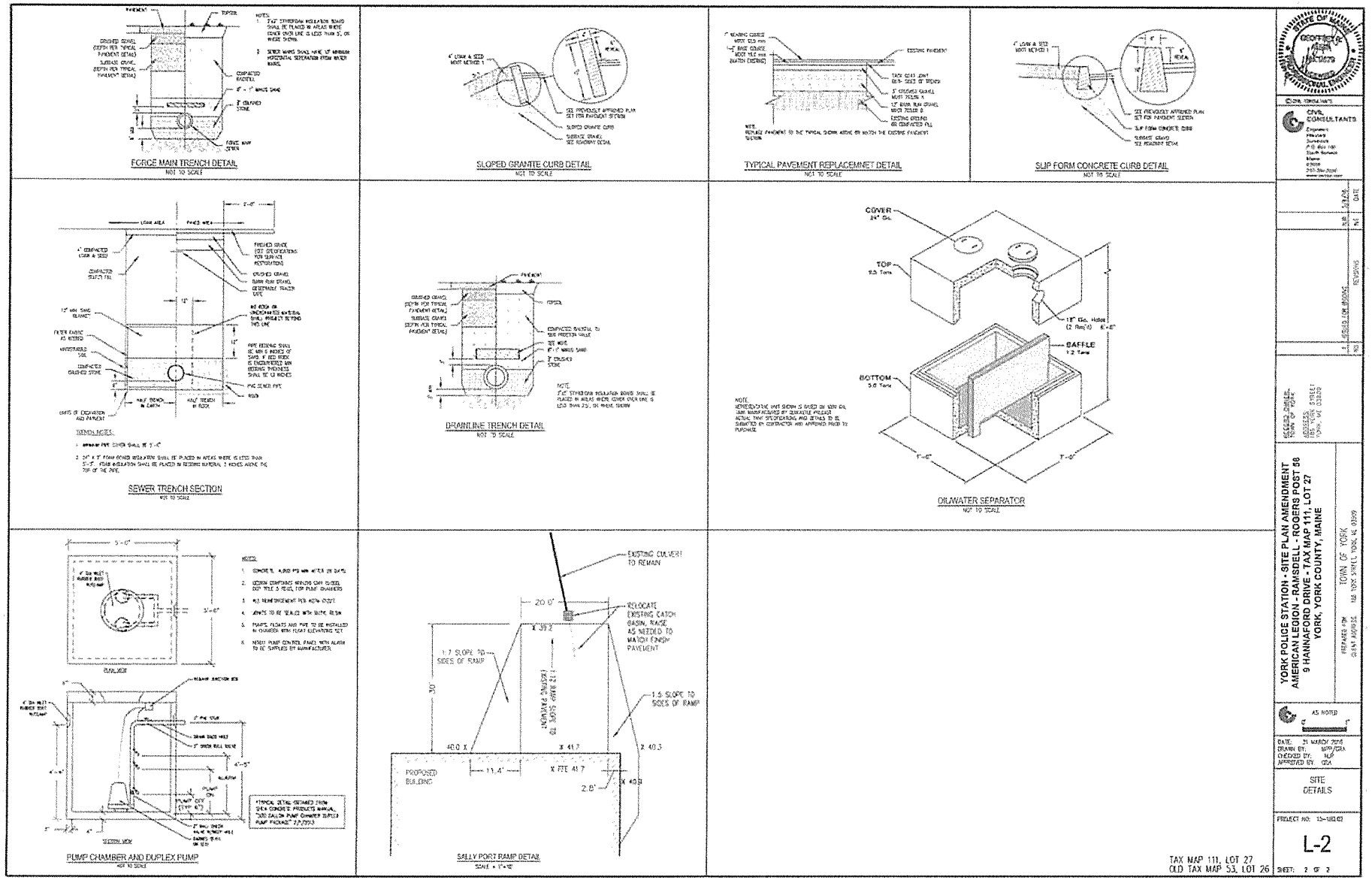

Back to Agenda

REQUEST FOR ACTION BY BOARD OF SELECTMEN

DATE SUBMITTED: September 29, 2016	☒ ACTION
DATE ACTION REQUESTED: October 3, 2016	☐ DISCUSSION ONLY
SUBJECT: Award of Radio Equipment Bid for Current Police Station Tower Conversion	

DISCUSSION OF OPTIONS AVAILABLE TO THE BOARD:

see attached memo

RECOMMENDATION: : I recommend that the bid be awarded to Two Way Communications Inc. to purchase the attached radio equipment for use in the upcoming conversion of old radio antennae system at the current police facility at 36 Main Street.

PROPOSED MOTION: I move to award the bid for radio equipment to Two Way Radio Communications Inc. in the amount of $13,991.72

FISCAL IMPACT: $13,991.72

DEPARTMENT LINE ITEM ACCOUNT: 100.0202.6002

BALANCE IN LINE ITEM IF APPROVED:

PREPARED BY: Chief Douglas P. Brady REVIEWED BY:

Back to Agenda

TOWN OF YORK, MAINE
Police Department

Douglas P. Bracy
Chief of Police

Mailing Address:
36 Main Street
York, Maine 03909

Dispatch:
Non-Emergency
(207) 363-4444

Administration:
(207) 363-1031

Facsimile:
(207) 361-6818

www.yorkpolice.org

Committed to excellence

MEMORANDUM

DATE:

TO: Town Manager Stephen Burns

CC: Board of Selectmen

FROM: Chief Douglas Bracy DPB

SUBJECT: AWARD OF BID FOR RADIO EQUIPMENT FOR CONVERSION OF RADIO TOWER AT OLD POLICE STATION

As we look forward to the erection of a new cell tower in York Beach at the current police station site we must begin the process to purchase the necessary equipment to co locate the town's radio system on this new tower.

I have attached a cost estimate for the equipment part of that conversion estimated by Two Way Communications Inc. The cost for this equipment is established through a Motorola state contract bid process. I would ask the Board to sole source this project to Two Way Communications Inc. as they have been our reliable vendor for nearly 35 years and have a proven track record of quality work and fair pricing. I would also recommend the Motorola brand as their reliability, durability, and costs have been solid for 35 years.

Verizon will provide an equipment shelter as part of the agreement with the Town to locate on this site. There will be additional costs as the project moves forward for installation and providing auxiliary generation to the equipment shelter.

Back to Agenda

2-Way Communications Service, Inc.
23 River Road
Newington, NH 03801

2-Way COMMUNICATIONS DIVISION

Invoice

51268

Date: 9/20/2016

Bill To:

Phone : 1-800-441-6288

Fax : 603-431-4832

E-mail us : CommDivision@2-way.biz

Visit Our Web Site : www.2-way.biz

York Police Department
36 Main Street
York ME 03909

P.O. Number:	Terms:
B. Scamman	Net 15

Quantity	Item	Description	Amount
		Antenna Systems for new Verizon tower: Does not include shelter equipment.	
1	79492	Telewave, Inc. - 150-157 MHz 6dB Fiberglass Omni Antenna	1,512.50
2	37510	Telewave, Inc. - 148-174 MHz 2.5dB Fiberglass Omni Antenna	1,731.40
1	Spec Item	473883 - Telewave, Inc. - 148-174 MHz 2.5dB Inverted Fiberglass Omni Antenna	865.70
2	70072	Laird Technologies - 450-470MHz 7.1dB 3 Element Yagi Antenna	333.40
3	Spec Item	433866 - CommScope - 72" Heavy Duty Stand-Off Bracket	1,143.80
1,100	300401	RFS - 7/8" Foam CELLFLEX Cable	5,225.00
6	306294	RFS - OMNI FIT Premium N Male LCF78-50	210.00
6	316385	RFS - OMNI FIT Premium N Female LCF78-50	227.40
1	Spec Item	316302 - RFS - 7/8" Prep Tool, LCF78	594.30
4	425864	COMMSCOPE Heavy Duty Pipe to Pipe Clamp. Joins Two 1-1/2"OD to 3-1/2" OD round members. 1/2" x 10" threaded rod. Kit of 2.	217.60
6	364793	Wireless Solutions - 4' LMR400 Jumper NM - NM	236.04
3	371673	Times Microwave - Self Bonding Silicone Tape. Two 1.5" x 15' rolls.	84.00
1	Spec Item	301381 - Ventev - SSM - Stackable Snap-in Hangers, (7/8"), 280 Pack	663.08
6	Spec Item	464871 - Ventev - SSM - Stackable Snap-in Hangers, (1/2")	134.82
6	372585	CommScope - 3/8" Cable Insert For 1/2" Hangers, 10 Pack	52.44
6	473368	CommScope - Pre-laced hoisting Grip for 7/8" Foam	154.20
1	426902	Ventev - Pre-Laced Hoist Grip 3/8"	15.80
2	Spec Item	413504 - CommScope - Universal Snap In Adapter	125.10
1	Shipping/Handling	Shipping/Handling	465.14

Thank you for choosing 2-WAY.

Subtotal $13,991.72

Sales Tax (0.0%) $0.00

Total **$13,991.72**

Back to Agenda

Notice of Public Hearing
Town of York - Board of Selectmen
Monday, October 3, 2016
7:00 PM
York Public Library

The York Board of Selectmen will conduct a Public Hearing on **Monday, October 3, 2016** at **7:00PM** regarding proposed **Long Beach Avenue Road Improvements**.

Any questions or comments will be welcome at the hearing, and written comments may be submitted in advance to the Town Manager's Office.

The Proposed Plans are available to view in the Town Manager's Office at the Town Hall and on the Town's web page (www.yorkmaine.org).

Back to Agenda

REQUEST FOR ACTION BY BOARD OF SELECTMEN

DATE SUBMITTED: September 30, 2016	☒ ACTION
DATE ACTION REQUESTED: October 3, 2016	☐ DISCUSSION ONLY
SUBJECT: Business License Applications	

DISCUSSION OF OPTIONS AVAILABLE TO THE BOARD: All approvals are contingent on taxes being current and all appropriate departments (inspections) giving approval; See "Department Approvals" on page two of each application. Signed business license applications and certificates will not be released to the applicant until all necessary department approvals have been received.

RECOMMENDATION: Approve the Business License(s) attached.

PROPOSED MOTION: I move to approve the following licenses:

- *Eaton's Neck, LLC DBA: Lighthouse Inn and Carriage House (Innkeeper, Food Service); located at 20 Nubble Road*
- *Maryjane Merritt DBA: The Union Bluff Hotel (Food Service, Liquor, Special Amusement, Innkeeper, Coin-Operated Amusement); located at 8 Beach Street*
- *Two Beach Street, LLC DBA: Atlantic House (Innkeeper); located at 2 Beach Street*

All subject to taxes, fees and inspections being current and compliant with the usual noise stipulations.

PREPARED BY: Melissa M. Avery REVIEWED BY: _____

Back to Agenda

THE TOWN OF

YORK, MAINE

186 York Street, York, Maine 03909

BUSINESS LICENSE APPLICATION

NOTE: Business Licenses are not transferable to another person, business or location.

Business Name: Atlantic House

Street Address: 2 Beach St York Beach, ME 03901

Business Owner: 2 Beach St LLC

Mailing Address: PO Box 170998 Boston, MA 02117

Business Manager: 216 Atlantic Innkeepers, LLC

Mailing Address: 180 Locust St, Suite 2 Dover, NH 03820

Phone Number: 603-373-1510

E-mail Address: gabrielle.smith@greatamericanhg.com

Please indicate who is to be the Primary Contact with the Town: ☐ OWNER or ☒ MANAGER

Is the Business Owner same as the prior year? ☒ YES ☐ NO ☐ NEW BUSINESS

Please indicate which Licenses or Local Approvals you seek:

Lodging:

___ Bed and Breakfast License (C/F)

✓ Innkeeper License (C/F)

Number of Rooms: 15

Food and Beverage:

___ Food Service License (C/F)

Number of Seats: ___ / ___ (Existing / Proposed)

___ Liquor License (F/P)

___ Bottle Club License (F/P)

Entertainment:

___ Special Amusement License (F/P)

___ Dance Hall License (F/P)

___ Bowling Alley License (F)

___ Coin-Operated Amusement License (P)

___ Bingo, Beano and Games of Chance

Miscellaneous:

___ Transient Seller's License

___ Flea Market License

___ Junkyard, Auto Graveyard/Recycling License

___ Other: _____

C – Code Enforcement Inspection Required F – Fire Department Inspection Required P – Police Department Inspection Required
S – Sewer District Inspection Required W – Water District Inspection Required

Code Enforcement: (207) 363-1002

Police Department: (207) 363-1031

Village Fire Department: (207) 363-1015

Beach Fire Department: (207) 363-1014

York Sewer District: (207) 363-4232

York Water District: (207) 363-2265

Other Municipal Water and Sewer Districts may apply depending on your business location

- CONTINUE TO BACK PAGE OF APPLICATION -

Back to Agenda

THE TOWN OF

YORK, MAINE

186 York Street, York, Maine 03909

BUSINESS LICENSE APPLICATION

NOTE: Business Licenses are not transferable to another person, business or location.

Business Name: EATON'S NECK LLC, DBA Lighthouse Inn & Carriage House

Street Address: 20 Nubble Rd, York Beach ME 03910

Business Owner: DIANE PACE

Business Manager: Diane Pace

Mailing Address: PO BOX 249 York Beach, ME 03910

Mailing Address:

Phone Number: 781-910-4251

Phone Number:

E-mail Address: DKPACE@COMCAST.NET

E-mail Address:

Please indicate who is to be the Primary Contact with the Town: ☑ OWNER or ☐ MANAGER

Is the Business Owner same as the prior year? ☑ YES ☐ NO ☐ NEW BUSINESS

Please indicate which Licenses or Local Approvals you seek:

Lodging:

___ Bed and Breakfast License (C/F)

✓ Innkeeper License (C/F)

Number of Rooms: 29

Entertainment:

___ Special Amusement License (F/P)

___ Dance Hall License (F/P)

___ Bowling Alley License (F)

___ Coin-Operated Amusement License (P)

___ Bingo, Beano and Games of Chance

Food and Beverage:

✓ Food Service License (C/F)

Number of Seats: 15 / ___ (Existing / Proposed)

___ Liquor License (F/P)

___ Bottle Club License (F/P)

Miscellaneous:

___ Transient Seller's License

___ Flea Market License

___ Junkyard, Auto Graveyard/Recycling License

___ Other: _____

C – Code Enforcement Inspection Required F – Fire Department Inspection Required P – Police Department Inspection Required
S – Sewer District Inspection Required W – Water District Inspection Required

Code Enforcement: (207) 363-1002

Police Department: (207) 363-1031

Village Fire Department: (207) 363-1015

Beach Fire Department: (207) 363-1014

York Sewer District: (207) 363-4232

York Water District: (207) 363-2265

Other Municipal Water and Sewer Districts may apply depending on your business location

- CONTINUE TO BACK PAGE OF APPLICATION -

Back to Agenda

THE TOWN OF

YORK, MAINE

186 York Street, York, Maine 03909

BUSINESS LICENSE APPLICATION

NOTE: Business Licenses are not transferable to another person, business or location.

Business Name: The Union Bluff Hotel

Street Address: 8 Beach St.

Business Owner: MARYJANE MERRITT

Mailing Address: 10 Kimball Farm Lane
York Maine 03909

Phone Number: (207) 363-1333

E-mail Address: mj@unionbluff.com

Business Manager: BRENT MERRITT

Mailing Address: P.O. Box 1860
York Beach, Maine 03910

Phone Number: (207) 363-1333

E-mail Address: brent@unionbluff.com

Please indicate who is to be the Primary Contact with the Town: ☑ OWNER or ☑ MANAGER

Is the Business Owner same as the prior year? ☑ YES ☐ NO ☐ NEW BUSINESS

Please indicate which Licenses or Local Approvals you seek:

Lodging:

___ Bed and Breakfast License (C/F)
✓ Innkeeper License (C/F)
Number of Rooms: 41

Entertainment:

✓ Special Amusement License (F/P)
___ Dance Hall License (F/P)
___ Bowling Alley License (F)
✓ Coin-Operated Amusement License (P)
___ Bingo, Beano and Games of Chance

Food and Beverage:

✓ Food Service License (C/F)
Number of Seats: 220 / ___ (Existing / Proposed)
✓ Liquor License (F/P)
___ Bottle Club License (F/P)

Miscellaneous:

___ Transient Seller's License
___ Flea Market License
___ Junkyard, Auto Graveyard/Recycling License
___ Other: _____

C – Code Enforcement Inspection Required F – Fire Department Inspection Required P – Police Department Inspection Required
S – Sewer District Inspection Required W – Water District Inspection Required

Code Enforcement: (207) 363-1002
Police Department: (207) 363-1031
Village Fire Department: (207) 363-1015
Beach Fire Department: (207) 363-1014
York Sewer District: (207) 363-4232
York Water District: (207) 363-2265

Other Municipal Water and Sewer Districts may apply depending on your business location

- CONTINUE TO BACK PAGE OF APPLICATION -

Back to Agenda

REQUEST FOR ACTION BY BOARD OF SELECTMEN

DATE SUBMITTED: September 29, 2016	☐ ACTION
DATE ACTION REQUESTED: October 3, 2016	☐ DISCUSSION ONLY
SUBJECT: Collective Bargaining Agreement: Public Works	

DISCUSSION OF OPTIONS AVAILABLE TO THE BOARD:
1. Approve the collective bargaining agreement between the Town of York and the York DPW Association
2. Not approve the collective bargaining agreement between the Town of York and the York DPW Association.

RECOMMENDATION: Approve the collective bargaining agreements between the Town of York and the York DPW Association.

PROPOSED MOTION:
I move to approve the collective bargaining agreement between the Town of York and the York DPW Association dated July 1, 2016 through June 30, 2019.

FISCAL IMPACT: Varied
DEPARTMENT LINE ITEM ACCOUNT: Multiple
BALANCE IN LINE ITEM IF APPROVED:

PREPARED BY: Liam Gallagher, HR Director REVIEWED BY: _____

Back to Agenda

Town of York
186 York Street
York, Maine 03909-1314

To: Board of Selectmen
Cc: Stephen H. Burns, Town Manager
From: Liam Gallagher
Subj: Collective Bargaining Agreement: Public Works
Date: September 28, 2016

The Town has come to a tentative agreement at with the York DPW Association for the Public Works department. The agreement, as proposed, includes the following changes to economic items.

Wages

At the onset of negotiations we identified an objective of moving to an inflationary based metric for future cost of living adjustments to wage scales while moving away from guaranteed increases that have, particularly recently, been well above most standard metrics of inflation. By year three of the agreement we will see a COLA measure of 0% - 5%. The agreement includes a $.25/hour "benefits adjustment" stipend for employees in year 2 of the agreement (July 1, 2017). This hourly stipend, which is not adjusted annually for inflation, extends a wage increase previously provided to Police, Dispatch, and Fire units.

Effective July 1, 2017 (FY17/year 1) the agreements provide a 2.25% cost of living adjustment. Year 2 of the agreements (FY18) provide a COLA of 1% – 5% based on the CPI-W (Consumer Price Index for Urban Wage Earners and Clerical Workers). Year 3 of the agreement (FY19) provides a COLA of 0% - 5% based on the CPI-W.

This wage package is consistent with the Dispatch, Fire and non-bargaining groups previously approved by the Board.

Insurance

Following a substantial insurance concession in the last three-year agreement, we again sought changes to the medical insurance plan offerings as premiums continue to increase at a rate well above wages and inflation. We had three main objectives; reduce the employer's contribution to the more costly of the two current medical insurance plans, further incentivize employee enrollment in the less comprehensive of the two current plan options, and expand plan options moving forward.

Effective January 1, 2018, the Town will offer three medical insurance plans through the Maine Municipal Employee's Health Trust. The Town will contribute a dollar amount equal to 87.5% of the mid-level plan irrespective of the employee's plan election effectively capping the employer's contribution while increasing employee choice.

Consistent with the previously approved Fire, Dispatch and non-union policy, employees electing not to enroll in the medical insurance plan will be provided 25% of the employer premium

Back to Agenda

(currently 50% for those hired prior to July 1, 2013, 25% for those hired after).

Retirement

The Town currently offers two retirement plan options; a defined benefit plan (MainePERS) in which the plan determines employer and participant (employee) contribution levels, and a defined contribution plan (ICMA-RC) in which the contributions are controlled locally.

Effective July 1, 2016, all new hires will have the option of enrollment in the MainePERS pension plan or enroll in a defined contribution plan through ICMA-RC in which employee contributions will be matched 2-to-1 up to a maximum 6% employer contribution. This change reflects a 1.5% contribution reduction for those future employees enrolling in the ICMA-RC plan and will require employee participation in the plan.

We would like to highlight that these changes, as outlined above, are not insignificant changes to the wage and benefit programs provided by the Town. These changes, many of which will amount to concessions by the bargaining unit, reflect labor and management's mutual interest in continuing to provide the residents of York with outstanding service at a competitive cost while continuing to offer comprehensive wages and benefits. It is without reservation or hesitation I recommend approving the proposed agreement.

Back to Agenda

Agreement Between

The

Town of York, Maine

And

York DPW Association

For the

York Public Works Department

July 1, 2016 – June 30, 2019

Back to Agenda

Index

Article 1 Preamble 4
Article 2 Recognition 4
Article 3 Maintenance of Standards 4
Article 4 Management Rights 4
Article 5 Union Security 5
Article 6 Check off Authorization 5
Article 7 Access to Premises 6
Article 8 Grievance 6
Article 9 Stewards 7
Article 10 Union Activities 8
Article 11 Non–Discrimination 8
Article 12 Discipline 8
Article 13 Personnel Files 9
Article 14 Bereavement Leave 10
Article 15 Leave Benefits 10
Article 16 Separation of Employment 10
Article 17 Separability and Saving Clause 11
Article 18 Injury on Duty 11
Article 19 Bulletin Board 12
Article 20 Seniority 12
Article 21 Vacation 13
Article 22 Insurance 14
Article 23 Sick Leave 16
Article 24 Sick Leave Bank 17
Article 25 Holidays 18
Article 26 Scheduling 18
Article 27 Hours and Overtime 19
Article 28 Record Keeping 19
Article 29 Call In 19
Article 30 Stand By 20
Article 31 Clothing Uniform Allowance 20
Article 32 Academic Reimbursement 20
Article 33 Reimbursement of Travel Expenses 21
Article 34 Retirement 21
Article 35 Americans With Disabilities Act 22
Article 36 Family Medical Leave 22
Article 37 Military Leave 26

Back to Agenda

Index Continued

Article 38 Jury Duty 26
Article 39 Wages 26
Article 40 Plus Rates 26
Article 41 Tobacco 27
Article 42 Receipt of Gifts 27
Article 43 Recruitment and Promotion 27
Article 44 Classification Description 28
Article 45 Anniversary Date / Employment Date 28
Article 46 Probationary Employment 28
Article 47 Full-Time Employment 28
Article 48 Performance Evaluation 29
Article 49 Town Property 29
Article 50 Physical Wellness Incentive 29
Article 51 Duration of Agreement.....30
Appendix A Wage Scale 31

Back to Agenda

ARTICLE 1- PREAMBLE

Pursuant to the provisions of the Municipal Public Employees Labor Relations Act (Title 26, MRSA, 961 through 974, 1969, as amended), the parties hereto have entered into this Agreement in order to establish mutual rights, preserve proper employee morale and to promote effective and efficient operations.

ARTICLE 2 - RECOGNITION

The employer recognizes the Union as the sole and exclusive bargaining agent for the purpose of negotiating salaries, wages, hours, and other conditions of employment for all its eligible employees within the bargaining unit, as determined in accordance with the Municipal Public Employees Labor Relations Act.

ARTICLE 3- MAINTENANCE OF STANDARDS

Section 1 - Protection of Conditions

The employer agrees that all conditions of employment relating to wages, hours of work, overtime differentials and general working conditions shall be maintained at not less than the highest standards in effect at the time of the signing of this Agreement, and the conditions of employment shall be improved wherever specific provisions for improvements are made elsewhere in this Agreement. This provision does not give the employer the right to impose or continue wages, hours, and working conditions less than those contained in this Agreement, unless specifically agreed to by both parties.

ARTICLE 4- MANAGEMENT RIGHTS

The Town retains all rights and authority to manage and direct its employees, except as otherwise specifically provided for in this Agreement. Such rights and authority include, but are not limited to, the right and authority to exercise control and discretion over the organization and the efficiency of the operations of the department; set standards for service to be offered to the public; to direct the employees of the department including the right to assign work and overtime; to hire, examine, classify, evaluate, promote, train, transfer, assign and schedule employees within the department; to suspend, demote, discharge, or take other disciplinary action against employees for just cause; to increase, reduce, change, modify, or alter the composition and size of the work force, including the right to relieve employees from duty because of lack of work or funds or other legitimate reasons; to determine the location, method, means, and personnel by which operations are to be conducted; to establish, modify, combine or abolish job positions and classifications; to change or eliminate existing methods of operation, equipment or facilities; to establish, implement and maintain effective safety, health and property

Back to Agenda

protection measures; to create, modify or delete the rules and regulations; to take necessary action to carry out the mission of the department in cases of emergency.

ARTICLE 5 - UNION SECURITY

Membership in this Local Union is not compulsory. Membership in this Local Union is separate, apart and distinct from the assumption by an employee of his equal obligation to the extent that he receives equal benefits. The Local Union is required under this Agreement to represent all of the employees in the bargaining unit fairly and equally without regard to whether or not an employee is a member of this Union. The terms of this Agreement have been made for all employees in the bargaining unit and not for members in the Local Union.

This Agreement has been executed by the employer after it has satisfied itself that the Union is the choice of the majority of the employees in the bargaining unit. Accordingly, it is fair that each employee in the unit pay his own way and assume his fair share of the obligation along with the grant to equal benefits contained in this Agreement. In this regard, employees may elect to accept the provisions of either 1 or 2 below.

1. All employees who are members of the Union as of the date of this Agreement, and all employees hereafter who become members of the Union, shall maintain their membership in good standing in the Union for the duration of the Agreement.

2. Any present or future employee who is not a member and does not want to be a member shall pay a fair share fee as a contribution towards the administration of the Agreement in the amount equal to 80% of the current dues for the duration of this Agreement.

ARTICLE 6 - CHECK OFF AUTHORIZATION

Section 1. The employer shall deduct regular monthly dues (deducted on a weekly basis) and fees (including agency fees, fair share fees or service fees and initiation fees) upon receipt of a signed authorization from each employee (a copy of which is to be retained by the Employer) and a certified statement from the Secretary-Treasurer of the Local Union as to the amount for dues and fees. Such authorization shall be for the life of this Agreement and shall be continued thereafter if an Agreement exists between the Employer and the Union, unless an employee notifies the Union in writing no more than twenty (20) days and not less than ten (10) days before the expiration of the Agreement of his desire to revoke his authorization for check off.

Section 2. The Employer shall forward all such dues and fees so collected to the Secretary-Treasurer of the Local Union before the end of each month in which deductions were made. In the event dues and fees are deducted each week, the Employer shall forward such dues and fees to the Secretary-Treasurer of the Local Union before the tenth (10th) day of the month following the month in which deductions were made.

Back to Agenda

Section 3. Delinquent Dues. Upon notification by the Union of delinquent dues or fees, the Employer shall deduct for delinquent dues or fees in addition to deduction for regular dues or fees.

Section 4. The Union shall indemnify and save the Employer harmless against all claims and suits which may arise by reason of any action taken in making deductions of said dues and fees and remitting the same to the Union pursuant to this Article.

ARTICLE 7 - ACCESS TO PREMISES

Authorized agents of the Union shall have access to the Employer's establishment during working hours for the purpose of adjusting disputes, investigating working conditions, collection of dues, and ascertaining that the Agreement is being adhered to, provided, however, that there is no interruption of the Employer's working schedule. The Union representative shall notify the Department head when entering the Employer's premises.

ARTICLE 8 - GRIEVANCE PROCEDURE

A grievance is hereby jointly defined to be any dispute, which may arise under the interpretation or application of this Agreement. Any grievance arising between the Employer and the Union or an employee represented by the Union shall be settled in the following manner:

Step One: The Steward or Alternate and employee shall take up the written grievance with the Department head within five (5) working days of the occurrence of the event or first knowledge of the event giving rise to the grievance; thirty (30) days for economic issues. Within five (5) working days after the grievance is presented by the employee or the Union, the Department head will meet with the employee and the Steward to discuss the grievance. The Department head shall respond, in writing, to the steward and aggrieved employee within five (5) working days after the meeting date. Within five (5) working days after the written response of the Department head is received, if the grievance is not resolved between the parties, the steward and aggrieved employee may submit the grievance in writing to the Town Manager with a copy of the grievance to the Local Union business office.

Step Two: Within five (5) working days after receipt of the written grievance by the Town Manager, the Town Manager will hold a meeting with the Union Business Agent and the steward on the grievance. Within five (5) working days after the meeting, the Town Manager will respond, in writing, to the Union as to his/her decision on the grievance. In the event that the decision of the Town Manager is not acceptable, the Union may, within ten (10) working days after receipt of the Town Manager's response, file a written request for grievance arbitration of the issue and so advise the Town of the Union's request to arbitrate.

Back to Agenda

Step Three: The parties shall attempt to mutually agree upon an arbitrator. If the parties cannot agree upon an arbitrator within fifteen (15) working days from when notice to arbitrate is filed, either party can request the Federal Mediation and Conciliation Service to appoint an arbitrator. The expenses of the arbitrator and the proceedings shall be shared equally by the parties. Failure to meet these time deadlines shall terminate the grievance. The arbitrator shall have no authority to amend, modify, add to, or detract from the specific terms and provisions of the Agreement. The arbitrator's decision shall be final and binding on the parties for the duration of the Agreement. The arbitrator shall be requested to issue the decision within thirty (30) days after the conclusion of the testimony and final arguments. Expenses of the arbitrator's services and the proceedings shall be borne equally by the Town and the Union; however, each party shall be responsible for compensating its own representatives and witnesses. If either party desires a verbatim record of the proceedings, it may cause a record to be made providing it pays for the record and make copies available without charge to the other party and to the arbitrator.

Time limits for the processing of grievances may be extended by written consent of the parties.

ARTICLE 9- STEWARDS

Section 1. The employer recognizes the right of the Union to designate a Steward and an Alternate. The authority of Stewards and Alternates so designated by the Union shall be limited to, and shall not exceed, the following duties and activities:

a) the investigation and presentation of grievances in accordance with the provisions of the collective bargaining agreement;

b) the collection of dues when authorized by appropriate local Union action;

c) the transmission of such messages and information which shall originate with and are authorized by the local Union or its Officers, provided such messages and information have been reduced to writing.

Section 2. Stewards and Alternates have no authority to take strike action, or any other action interrupting the Employer's business, except as authorized by official action of the Union.

Section 3. Stewards shall be permitted to investigate, present and process grievances on or off the property of the Employer without loss of time or pay so long as the Town does not incur any additional expenses, with a limit of two (2) hours per week. Such time spent in handling grievances shall be considered working hours in computing daily and/or weekly overtime.

Section 4. One member of the negotiating team shall be allowed sufficient time off without loss of time or pay to represent the York DPW Association, in all negotiations with the Employer concerning collective bargaining so long as the Town does not occur any additional expenses.

Back to Agenda

ARTICLE 10- UNION ACTIVITIES

Section 1 - Time Off for Union Activities

The employer agrees to grant the necessary time off, without discrimination or loss of seniority rights and without pay, to any employee designated by the Union to attend a labor convention or to serve in any capacity on other official Union business, provided one (1) week written notice is given to the employer by the Union specifying the length of time off. The Union agrees that, in making its request for time off for Union activities, due consideration shall be given to the number of employees affected in order that there shall be no disruption of the employer's operations due to lack of available employees. This section does not apply to the York DPW Association Membership Monthly Meeting.

Section 2 - No Discrimination Because of Union Activities

Any employee member of the Union acting in any official capacity whatsoever shall not be discriminated against for his acts as such Officer of the Union so long as such acts do not interfere with the conduct of the employer's business, nor shall there be any discrimination against any employee because of Union membership or activities.

ARTICLE 11- NON-DISCRIMINATION

Section 1 The Town shall administer and implement collective bargaining agreement in a manner that shall not discriminate against any person because of race, color, religion, sexual orientation, gender, national origin, age, or physical or mental disability.

Section 2 The employer and the Union agree that there will be no discrimination by the Employer or the Union against any employee because of any employee's lawful activity and/or support of the Union.

Section 3 The use of the male or female gender of nouns or pronouns is not intended to describe any specific employee or group of employees but is intended to refer to all employees regardless of sex.

ARTICLE 12 - DISCIPLINE

Discipline may be initiated for any infraction based on just cause. Among infractions which may be subject to disciplinary action are the following:

1. The employee has been convicted on a felony or of a misdemeanor involving moral turpitude

2. The employee has violated a Town and/or departmental policy and/or procedure or failed to obey any proper direction made and given by a supervisor

Back to Agenda

3. The employee is intentional offensive in conduct or language in public towards fellow employees

4. The employee exhibits inability to perform the duties and responsibilities require and recognized in the job description

5. The employee is careless or negligent with the moneys or other properties of the Town

6. The employee exhibits recurring absenteeism and/or tardiness

Discipline will normally be initiated in the following manner: verbal warning; written warning; suspension; and termination. Depending on the nature of the offense, discipline may be initiated at any level listed above. The Town Manager shall be made aware of any action initiation as outlined in the disciplinary process section of this policy.

Any member charged with a violation of department rules and regulations, incompetence, misconduct, negligence, insubordination, disloyalty or other serious disciplinary infraction may request a hearing provided such request is made in writing and delivered to the department head no later than five (5) days after the member is advised of the charge against him. The Town shall only be required to hold a hearing for suspensions or dismissals. No member shall be dismissed without first being given notice and an opportunity for a hearing whether he requests it or not. In the case of a member who has been suspended, the hearing shall, if requested by the member, be held no more than five (5) days after the date when the suspension began.

The member shall be informed of the exact nature of the charge and shall be given sufficient notice of the hearing date and time to allow him an opportunity to consult legal counsel, conduct an investigation, and prepare a defense. The hearing, which shall be before the department head, or in his absence or incapacity the acting department head shall be informal in nature. The member may be accompanied by legal counsel or a representative of the Union or Steward. The member shall have the right to confer with his representative at any time during the hearing and shall have the right to have his representative speak on his behalf. Any disciplinary action taken against a member shall be subject to the grievance procedure. All disciplinary action shall only be taken for "just cause".

ARTICLE 13- PERSONNEL FILES

Insofar as permitted by law, all personnel records, including home addresses, telephone numbers, and pictures of members shall be confidential and shall not be released to any person other than officials of the department and other municipal officials.

Upon request, a member shall have the right to inspect his official personnel record. Inspection shall be during regular business hours and shall be conducted under supervision of the employer.

Back to Agenda

A member shall have the right to have added to his personnel file a written refutation of any material which he considers detrimental.

Members shall receive a copy of any written reprimand which is placed in the members personnel file.

Any discipline shall be purged after twelve (12) months provided the employee is not cited for similar discipline.

ARTICLE 14 - BEREAVEMENT LEAVE

In the event of death in the immediate family of an employee, the employee shall be granted up to 40 hours of leave of absence with full pay to make household adjustments or to attend funeral services. "Immediate family" is hereby defined to include spouse, parents, children, brothers, sisters, parents-in-law, grandparents, grandchildren, step-parents, step-children and brother-in-law, sister-in-law, or other relatives living in the same household.

Additional days may be granted with the approval of the Department head for out-of-state funerals, which may be deducted from sick leave or vacation.

Should an employee need to attend services for individuals not covered as "immediate family" or family they may request time off without pay or charge the time to vacation or sick leave as authorized by the Department Head.

ARTICLE 15 - LEAVE BENEFITS

An employee may request in writing and may be granted by the Town Manager, a leave of absence without pay for a period deemed necessary by the employee for the purpose of the leave and not in excess of twelve (12) months. The reason for that leave shall be stated in writing and reviewed every three (3) months and said leave may be discontinued after such review.

No employee shall receive salary or accumulate benefits from the Town while on leave of absence, except with special exception made by the Town Manager, which will not be precedent-setting.

ARTICLE 16 - SEPARATION OF EMPLOYMENT

Upon separation, the Town shall pay all wages and benefits owed in accordance with this agreement to the employee, if any, on the next regular pay day, provided all issued equipment and clothing has been returned.

In all cases of voluntary separation, the employee shall provide the Town with written notice of intent to terminate employment two (2) weeks prior to such termination.

Back to Agenda

ARTICLE 17- SEPARABILITY AND SAVINGS CLAUSE

If any article or section of this Agreement or any supplements or riders thereto shall be held invalid by operation of law or by any tribunal of competent jurisdiction, or if compliance with or enforcement of any article or section shall be restrained by such tribunal pending a final determination as to its validity, the remainder of this Agreement and of any supplements or riders thereto, or the application of such article or section to persons or circumstances other than those as to which it has been held invalid, or as to which compliance with or enforcement of has been restrained, shall not be affected thereby.

In the event that any article or section is held invalid or enforcement of or compliance with which has been restrained as above set forth, the parties affected thereby shall enter into immediate collective bargaining negotiations after receipt of written notice of the desired amendments by either the employer or the Union for the purposes of arriving at a mutually satisfactory placement of an article or section during the period of invalidity or restraint. There shall be no limitation of time for such written notice.

ARTICLE 18- INJURY ON DUTY

The Town shall select a carrier to provide Workers' Compensation coverage to all employees while in the service of the Town.

Employees who are covered by this Agreement and who are injured on the job shall receive in addition to compensation paid or payable under the Worker's Compensation Act, an amount sufficient to bring them up to full net wages while any incapacity exists and until they are either placed on disability retirement or return to active duty. This clause shall cover employees called into duty on off-duty time. Absence because of such injuries shall not be charged to accumulated sick leave.

The Town may consider temporary, light-duty assignments for employees with restrictions arising out of work related injuries or illnesses on a case-by-case basis. In addition to the availability of light duty work, management will consider the anticipated duration of the light-duty assignment. Management reserves the right to re-evaluate the need for light duty on a regular basis, and may discontinue light-duty assignments at any time based on departmental needs, budget, and where, after reevaluation, the duration of the light duty requirement is no longer temporary.

Rights to annual leave shall not be earned by an employee after the first twelve (12) weeks of receiving workers compensation benefits.

Back to Agenda

ARTICLE 19- BULLETIN BOARD

The employer agrees to provide suitable space for Union notices on a bulletin board. The Union shall limit its use of the bulletin board to official Union business, such as meeting notices and Union bulletins.

ARTICLE 20- SENIORITY

Seniority is defined as continuous service with the department from the date of last permanent hire.

Section 1 A seniority list shall be established naming all the employees covered by the Agreement, with the employee with the greatest seniority (years of service) listed first. Seniority shall be based upon the employee's last date of permanent hire. Seniority for the purpose of the Agreement shall be interpreted to mean length of continuous service only. Seniority and qualifications shall be major factors in all matters affecting layoff, recall and vacation preference.

Section 2 In the event it becomes necessary for the employer to lay off employees for any reason, employees shall be laid off in the inverse order of their seniority, by classification with bumping rights. All affected employees shall receive a minimum of a two (2) calendar week advance notice of layoff. The employer shall attempt to give as much notice as possible and the employer shall meet with the affected employees prior to the actual occurrence of layoff. Employees shall be recalled from layoff according to their seniority for up to fifteen (15) months from date of layoff. No new employee shall be hired until all employees on layoff status have been afforded recall notices.

Section 3 The seniority list shall be brought up-to-date on January 1st of every year and immediately posted thereafter on bulletin boards for a period of not less than thirty (30) days, and a copy of same shall be sent to the Union and to the Steward. Any objection to the seniority list, as posted, must be reported to the employer within ten (10) days from the date posted or it shall stand as accepted.

Section 4 All permanent job openings and/or vacancies shall be posted by the employer for application as soon as such opening and/or vacancy becomes available. This provision shall also apply to temporary job openings that are likely to last thirty (30) or more calendar days.

Back to Agenda

ARTICLE 21 - VACATION

Accrual. Employees assigned to a 40 hours work week shall accrue vacation leave in accordance with the following schedule (for the purpose of this article one day represents eight (8) hours for employees scheduled to work 40 hours per week and seven and one half hours for employees scheduled to work 37.5 hours per week on a year round bases):

Date of employment to completion of year 1	(80 or 75) hours/year (10 days)
Start of year 2 to completion of year 3	(96 0r 90) hours/year (12 days)
Start of year 4 to completion of year 5	(120 or 112.5) hours/year (15 days)
Start year 6 to completion of year 10	(144 or 135) hours/year (18 days)
Year 10+ years of service	(192 or 180) hours/year (24 days)

Rights to vacation leave shall not be earned by an employee during the following:

- Leave of absence without pay
- Suspension without pay
- After the first twelve (12) weeks of receiving Workers' Compensation benefits when on any non-pay status
- When all earned time is exhausted

Advance Leave – No employee shall be allowed to take vacation leave which has not been earned.

Employment – No employee shall be eligible to take vacation leave with pay until he/she has completed at least six (6) months of continuous service with the Town. The Town Manager may make an exception should there be extenuating circumstances.

Accrual - All employees will forfeit accumulated vacation time in excess of 30 days (240 /225 hours) on June 30th of each year.

Conditions of Accrual and Use: All requests for vacation time must be submitting in advance, in writing. Written requests for vacation of 40 hours or less may be made at anytime however the requests may not be approved if the request for time will have an adverse impact on the scheduling of work and projects. Requests for vacation of more than 40 hours must be submitted at least two (2) weeks in advance of the start of the requested leave.

Back to Agenda

All submitted requests for time off will be responded to within 24-hours of the request submission by the Director or their designee. The 24-hour response requirement may be waived by the employee should they choose.

Outstanding Vacation Leave - All outstanding vacation leave shall be paid to the employee upon separation from service not to exceed 240 (225) hours. Payment shall be made at the employee's regular rate of pay as of the date of payment.

ARTICLE 22 - INSURANCE

Section 1 – HEALTH INSURANCE

A. The Town shall provide through the Maine Municipal Employees Health Trust (MMEHT) its comprehensive health care program. The Town will provide up to full family subscriber coverage. Effective with the ratification of this agreement the Town will pay 85% of the POS-C plan. Commencing July 1, 2014 employees may choose either the Point of Service (POS) C or POS 200 plan. For employees who elect the POS-C plan, the Town shall pay eighty (80%) percent of the subscriber cost and the employee shall pay twenty (20%) percent. For employees who elect the POS 200 plan, the Town shall pay three hundred dollars ($300.00) greater than eighty-five (85%) percent of the subscriber cost and the employee shall pay fifteen (15%) percent, less three hundred dollars ($300.00).

   Effective January 1, 2018, the Town shall offer through the Maine Municipal Employees Health Trust (MMEHT) its comprehensive Point of Service (POS) - C, POS-200 and PPO-500 plans. The Town will contribute an amount equal to (87.5%) percent of the POS200 premium irrespective of plan selection with the member paying the applicable balance of said plan.

B. Any employee contribution towards the monthly health insurance premium shall be done on a pretax basis.

C. The Town shall maintain a section 125 (cafeteria or flexible benefits plan) for the purpose of providing health insurance and related benefits described in this Article, and all such benefits shall be provided pursuant to that plan. For employees enrolled in the MMEHT POS C plan or declining the Town provided medical insurance, the Town will contribute $450 annually to the section 125 plan for each employee. For employees enrolled in the MMEHT POS 200 plan, the Town will contribute $500 annually to the section 125 plan for each employee. Effective January 1, 2018, the Town agrees to contribute $500 annually to the flexible benefits plan.

Back to Agenda

D. Payment in lieu: A covered member may choose to obtain their health insurance through an alternative source (ex. spouse or parent). If both spouse and employee are covered by the Town of York's health insurance plan the Town will reserve the right to manage plan coverage in a manner most cost effective to the Town. For employees who do not receive health insurance through the Town of York will be paid 25% of the premium, less the basic life insurance premium, of the coverage that they would otherwise be eligible for. This payment will be made on a fiscal year basis in two installments, the first on or about January 1st and the second on or about July 1st for each of the previous six months. To be eligible for this benefit the recipient must show proof, satisfactory to the Town, that they have health insurance from another source. This health insurance must be substantially equal to the policy that would otherwise be offered by the Town. In the event another Town of York bargaining unit receives a more generous in-lieu of insurance incentive, members of this unit will be extended the same terms of said benefit.

Section 2 - LIFE INSURANCE

The Board of Selectmen shall select a carrier to provide life insurance coverage for eligible employees. The selection of the carrier shall follow discussion with the recommendation of the Employee Representatives. Life insurance shall be in the amount of 100% of the employee's annual base salary. The Town shall pay that percentage of the insurance premium cost in accordance with the employee's employment status as previously defined in this policy.

The Town will also offer any life insurance available through Maine Public Employees Retirement System at the employees' expense of said insurance.

Section 3 - LONG TERM DISABILITY

The Board of Selectmen shall select a carrier to provide long-term disability coverage to eligible employees. The selection of the carrier shall follow discussion with the recommendation of the Employee Representatives. Long-term disability insurance is available at the employees' expense as a payroll deduction.

Section 4 - INCOME PROTECTION

The Town will provide, at the employees expense, an income protection plan to all full time employees through Maine Municipal Employees Health Trust as a payroll deduction.

Back to Agenda

ARTICLE 23 - SICK LEAVE

Employees covered by this Agreement shall accrue one (1) day of sick leave per month of service. Fur purposes of this section 1 day shall equal 8 hours.

Employees must maintain a balance of 45 days (360 hours) of sick leave to qualify for personal days. A personal day is granted according to the number of hours assigned on the specific day the personal day will be taken. Personal days must be used within the following six (6) months of being earned and they do not have any cash value.

In the event no sick leave is taken in a six month period, personal days will be earned in the following manner:

January 1st - April 30th	- 1 Day
May 1st - August 31st	- 1 Day
September 1st - December 31st	- 1 Day

Once an employee reaches and maintains the maximum accrual level of one-hundred and thirty days (130) days (total of 1,040 hours), any annual accrual which is unused at the conclusion of the calendar year, shall be bought back at the rate of fifty percent (50%) of the unused sick leave above the one-hundred and thirty (130) days (1,040 hours), not to exceed six (6) days (48 hours) in any one year. The remaining fifty percent (50%) (6 days) will be credited for one (1) hour personal time off for each day returned (max, 6 hours) to the individual accumulated sick time to be used for personal leave only, not for reimbursement purposes. This personal leave should be used as there is no cash value upon termination or retirement.

Sick leave may be used for personal illness or physical incapacity of such a degree as to render the employee unable to perform the duties of his position. The Town reserves the right to have a doctor of the Town's choice examine employees on sick leave and pass judgment upon the propriety of sick leave usage.

Upon the death of a unit member, one hundred percent (100%) of accumulated sick leave will be paid to the widow or widower, if any, or if none, then to the guardian of the minor children, or to any other designated beneficiary

The following chart reflects the years of service and pay upon separation:

Years of Service	Sick Accumulation	Paid upon separation
0 – 5 years of service	125 days (1,000 hours)	None
5 – 10 years of service	125 days (1,000 hours)	25%

Back to Agenda

10 – 20 years of service	130 days (1,040 hours)	50% max to 45 days (360 hrs)
20 years plus	130 days (1,040 hours)	50% max to 65 days (520 hrs)

Upon separation from the Town of York, an employee who has met the service and age standards for retirement under the Town'splan with the Maine Public Employees Retirement System (MainePERS) (whether or not the employee is a participant in the MainePERS) shall receive a payment equivalent to sixty percent (60%) of the cash value of his/her accumulated sick leave. For such a qualifying employee there shall be no cap upon the amount of sick leave that he/she can accrue.

Retirement Health Savings Plan - The Town will give employees the opportunity to participate in a Retirement Health Savings Plan. Sick leave pay for time over 90 days can be directly submitted to the plan adopted by the Town of York through the ICMA Corporation. A one-time option will be made available to convert sick hours into the R.H.S.P. Employees will be able to convert one half of their sick time over 50 days with this option. Thereafter, a maximum of 20 days of an employee's sick time over 50 days can be converted in any one year. After such a conversion, fifty days would then become the maximum an employee would be eligible to be paid for rather than the ninety described above. Employees will also have the option to make a one-time election to contribute through payroll deduction to this plan subject to the rules or conditions of the R.H.S.P as adopted by the Town.

ARTICLE 24- SICK LEAVE BANK

The Public Works employees will establish a Sick Leave Bank as follows:

a) Any employee who wishes to participate in the Sick Leave Bank must contribute at least one day of his/her accumulated sick time to become a member;

b) The dollar value of that day is determined by the rate of pay of the employee making the donation. That dollar amount will be moved from the 'Earned Time Reserve' to the 'Sick Leave Bank'.

c) An employee committee will be formed to oversee the operation of the 'bank'. That committee will determine the minimum level necessary to maintain the bank and assess appropriate donation amounts from members to re-establish that minimum level as well as to determine how many days will be awarded to an employee who petitions for sick days from the bank. No sick leave will be awarded until he/she has exhausted all earned time.

Back to Agenda

d) When the committee makes the determination of banked sick leave award to an employee, the transfer will be made from the 'Sick Leave Bank' to the salary line of the department for which the employee work

ARTICLE 25- HOLIDAYS

The following days shall be observed as holidays by Unit members:

New Year's Day	Labor Day
Presidents' Day	Columbus Day
Patriots' Day	Veterans' Day
Memorial Day	Thanksgiving Day (2)
Independence Day	Christmas Day
Martin Luther King Day	

Eligible employees shall earn holidays as they occur immediately after appointment. Holiday pay shall not be given to any employee if he/she is on a leave of absence without pay, suspension, or any other non-pay status on the date the holiday falls

Employees who are required to work a holiday shall be paid at time and one half his/her base hourly rate for the all hours worked plus holiday pay at his/her hourly rate.

ARTICLE 26– SCHEDULING

The Public Works Director, with the approval of the Town Manager, will establish the regular work week. The regular work week for the Public Works Department is defined 40 hours except the Administrative Assistant position is defined as 37.5 hours.

Each day a meeting will be held to discuss work projects, assignments and updates. This meeting will be schedule for one half hour each day unless changed by the Public Works Director.

The pay period consists of seven (7) days commencing @ 12:01 A.M. on Monday with payment for hours worked during such period being made on the following Thursday. In the event that the workweek is permanently altered, the employee will be notified at least two (2) weeks prior to the effective date of change whenever possible. Flex-time scheduling, requested by the Public Works Director may be made available to employees with the approval of the Town Manager.

Back to Agenda

ARTICLE 27- HOURS AND OVERTIME

In an emergency or extenuating circumstance as defined by the Public Works Director or the Town Manager, overtime work may be assigned in order to meet operations requirements. Employees paid on an hourly rate shall be paid at one and one half (1 ½) times their straight time hourly rate for hours worked beyond 40, when authorized as above. Sick day shall not be included in the calculation of hours worked for the purpose of determining overtime (except in the event of a call in when sick days will be used to calculate the hours beyond 40 hours). Employees receiving paid compensatory time off shall earn such time at the rate of one and one half (1 ½) hours off for each hour worked.

With permission from the Public Works Director, hourly employees can earn compensatory time at the rate of one and one half (1 ½) hours off for each hour worked in excess of 40 hours of earned time. Earned time includes vacation and holiday only and does not include other kinds of leave. The maximum compensatory time accumulated at the end of any month may not exceed eighty (80) hours, with a one-time exemption per calendar year for extenuating circumstances with the permission of his/her supervisor. Upon separation the employee will be compensated for up to a maximum to 40 hours compensatory time.

ARTICLE 28– RECORD KEEPING

Accurately recording time worked is the responsibility of every hourly employee. Federal and State laws require the Town of York to keep an accurate record of time worked in order to calculate employee pay and benefits. Time worked is the time actually spent on the job performing assigned duties.

Hourly employees should accurately record the time they begin and end their work, as well as the beginning and ending time of each meal period. They should also record the beginning and ending time of any shift or departure from work for personal reasons. Overtime work must always be approved before it is performed.

The town will have the option of installing of a time clock.

Altering, falsifying, tampering with time records, or recording time improperly may result in disciplinary action, up to and including termination of employment.

ARTICLE 29- CALL-IN

Employees called in to work for hours which are not annexed consecutively to either end of the employee's work shift shall receive a minimum of four (4) hours pay at a time and one-half (1-

Back to Agenda

1/2) their base hourly rate of pay. This provision does not apply to scheduled overtime or holdover periods.

Effective July 1, 2012, Full time hourly employees called into work on a scheduled day off shall be paid for a four (4) hour minimum at time and one half their regular rate of pay and/or compensable time, to be worked out with the Public Works Director. This provision does not apply to scheduled overtime or holdover periods.

ARTICLE 30- STAND-BY

Stand-by is defined as a situation where any full time employee is not confined to any particular place, but is required only to leave word where he/she can be reached readily. When a full time hourly employee is required to stand-by for emergency maintenance as determined by the Public Works Director he/she will be paid at the rate of $15.50 per day for Saturdays, Sundays and holidays as long as the employee response time is within forty-five (45) minutes of being called in to work. Effective July 1, 2016 the stand by pay will be $16.00 per day. Effective July 1, 2017 the stand by paid will increase to $16.50 per day. Effective July 1, 2018 the stand by pay will increase to $17.00 per day. Should an employee not respond within the required time he/she will forfeit the stand-by pay for that day.

Stand by will normally commence on December 1st and run through March 31st. The Town reserves the right to start the stand by pay earlier or be extended at the discretion of the Public Works Director.

ARTICLE 31– CLOTHING UNIFORM ALLOWANCE

The Town will provide employees with an annual clothing allowance of $800.00 annually for the purposes of purchasing, or replacing, work related clothing as outlined in the uniform policy. The benefit will be paid in two equal lump sum installments during December and June. Lump sum payments will be taxed as income in accordance with Internal Revenue Service regulations.

Employees will be reimbursed up to $200.00 annually for the purchase of work related ANSI certified safety footwear. While purchases may be made at any time, reimbursements will be processed in June of each contract year.

ARTICLE 32- ACADEMIC REIMBURSEMENT

Employees may request reimbursement for 50% of the cost of tuition, books and registration cost of job-related college course(s) taken on their own initiative to a maximum of $200.00 per course

Back to Agenda

with a maximum of $600.00 per budget year. Employees must make the request prior to registering for the course. Such requests shall be submitted in writing to the Department Head outlining the following: institution offering the course; content of the course; cost; and course duration. The Department Head will review the request and if approved, will submit a recommendation to the Town Manager for approval. In order to receive reimbursement, the employee must submit documentation showing a grade of "C" or better to the Department Head and a receipt for the cost of the course. For this purpose, the Town of York will establish a RESERVE ACCOUNT in an amount not less than $600.00 annually.

ARTICLE 33- REIMBURSEMENT OF TRAVEL EXPENSES

Expenses: Reimbursement for expenses incurred in the conduct of official Town business are subject to approval by the Town Manager. Payment will be processed upon submission of receipts verifying allowable expenses.

Travel-Personal Vehicles: When utilizing personal vehicles for approved business related travel, an eligible employee shall be reimbursed at a rate set by the IRS Rate standard mileage allowance on January 1st of each year. Employees requesting payment under this sub-section must submit the required information on the prescribed form. Normal home to work travel is not compensable. .When traveling on approved business matters, conferences, and meetings, employees may, upon approval of the Town Manager, receive actual reimbursement for reasonable costs incurred. When on town business (i.e. work, meetings, seminars, etc.) where a meal is not provided, the Town will reimburse the employee using the State of Maine Per Diem Rates, excluding alcohol but including the tip.

ARTICLE 34 - RETIREMENT

The Town of York will offer a choice of retirement programs to all full time employees. The Town will contribute on behalf of the employee in either the Maine Public Employees Retirement System (Maine PERS) as a Participating Local District or in an ICMA RC 457 Deferred Compensation Program.

Maine Public Employees Retirement System (Maine PERS) – The employer's contribution, as mandated by the Maine Public Employees Retirement System, will be paid by the Town for all eligible and participating full time employees

All full time employees not participating in Maine PERS may request the Town to contribute of the ICMA Retirement Corporation 457 Deferred Compensation Program on their behalf. All full time employees participating in Maine PERS offered by the Town who wish to participate in the

Back to Agenda

ICMA Program may do so at their own expense through payroll deduction. For employees hired prior to July 1, 2016, the Town will contribute 7.5% to the ICMA RC program on behalf of those full time employees not participating in Maine PERS. For employees hired on, or after, July 1, 2016 the Town agrees to match employee contributions 2-to-1, up to a maximum employer contributions of 6%, to an I.C.M.A. defined contribution program.

Social Security – All employees are mandated to participate in the Social Security System.

ARTICLE 35- AMERICANS WITH DISABILITIES ACT

The employer will notify the Union as soon as it becomes aware of any situation requiring a reasonable accommodation within the terms of the Americans with Disabilities Act, will provide the Union with all relevant information, and will bargain with the Union concerning any accommodation that departs from any of the terms of this Contract or from any existing practice.

ARTICLE 36 - FAMILY MEDICAL LEAVE ACT

The employer will integrate the provisions of the Family Medical Leave Act with other leaves in this Agreement. All accrued sick leave must be used for Family Medical Leave before taking Family Medical Leave. The balance of the Family Medical Leave will be unpaid leave.

FAMILY & MEDICAL LEAVE

1. General

As provided by the 1993 Family and Medical Leave Act (FMLA), all eligible employees shall be entitled to take up to 12 weeks of unpaid, job-protected leave during any 12 month period for specified family and medical reasons.

2. Covered Family and Medical Reasons

An eligible employee shall be entitled to 12 weeks of unpaid leave during a 12-month period for one or more of the following reasons:

a) the birth or placement of a child for adoption or foster care;

b) to care for an immediate family member (spouse, child, or parent) with a serious health condition;

c) to take medical leave when the employee is unable to work because of a serious health condition;

Back to Agenda

d) a serious health condition, which shall be defined as an illness of a serious and long-term nature resulting in recurring or lengthy absences. Treatment of such an illness would occur in an inpatient situation at a hospital, hospice, or residential medical care facility, or would consist of continuing care provided by a licensed health care provider.

An employee may take leave if a serious health condition makes the employee unable to perform the functions of his/her position.

3. Employee eligibility:

An employee shall be entitled to family leave when he/she meets the following criteria:

a) The employee has worked for at least 12 months for the Town. The twelve months need not have been consecutive. (If the employee was on the payroll for part of a week, the Town will count the entire week. The Town considers 52 weeks to be equal to twelve months.)

b) The employee has to have worked for the employer for at least 1,250 hours over the 12 months before the leave would begin.

c) The employee must work in an office or worksite which employs 50 or more employees, or there must be 50 employees within 75 miles of the office or worksite. In this Town, all employees work within a 75-mile radius of Town Hall.

d) When both spouses are employed by the Town, they are each entitled to 12 work weeks of family leave for the birth or placement of a child for adoption or foster care, and to care for a parent who has a serious health condition.

4. Calculation of Leave.

Eligible employees can use up to 12 weeks of leave during any 12-month period. The Town will use a rolling 12-month period measured backward from the date an employee uses any FMLA leave. Each time an employee uses leave, the Town computes the amount of leave the employee has taken under this policy, subtracts it from the 12 weeks, and the balance remaining is the amount the employee is entitled to take at that time. For example, if an employee has taken 5 weeks of leave in the past 12 months, he or she could take an additional 7 weeks under this policy.

5. Maintenance of Benefits.

An employee shall be entitled to maintain group health insurance coverage on the same basis as if he/she had continued to work at the Town. To maintain uninterrupted coverage, the employee will have to continue to pay his/her share of insurance premium payments. This payment shall be

Back to Agenda

made either in person or by mail at the Town Hall by the 21st day of each month. If the employee's payment is more than 30 days overdue, the Town will drop the coverage.

If the employee informs the Town that he/she does not intend to return to work at the end of the leave period, the Town's obligation to provide health benefits ends. If the employee chooses not to return to work for reasons other than a continued serious health condition, the Town will require the employee to reimburse the Town the amount the Town contributed towards the employee's health insurance during the leave period.

If the employee contributes to a life insurance or disability plan, the Town will continue making payroll deductions while the employee is on paid leave. While the employee is on unpaid leave, the Town will request that the employee continue to make those payments, along with the health care payments. If the employee does not continue these payments, the Town will recover the payments at the end of the leave period, in a manner consistent with the law.

Vacation, sick leave and holidays will not accrue during the leave period consistent with the Town's benefits policy. However, the use of family or medical leave will not be considered a break in service when vesting or eligibility to participate in benefit programs is being determined.

6. Job Restoration.

An employee who utilizes family or medical leave under this policy will be restored the same job or a job with equivalent status, pay, benefits and other employment terms.

7. Use of Paid and Unpaid Leave.

If an employee has any accrued paid leave (e.g., sick leave, vacation) remaining after the conclusion of the Family Medical Leave the employee may use such leave at the rate of full time weekly scheduled hours (37.5 or 40) until all time is exhausted. Vacation and sick time will not continue to accrue, however, insurance, and retirement benefits will continue during that time.

PROCEDURES:

8. Procedure for requesting leave.

All employees requesting leave under this policy must complete the Family/Medical leave form available from the Human Resources Director or the Town Manager.

When an employee plans to take leave under this policy, the employee must give the Town 30 days' notice. If it is not possible to give 30 days' notice, the employee must give as much notice as is possible. An employee undergoing planned medical treatment is required to make a reasonable effort to schedule the treatment to minimize disruptions to the Town's operations.

Back to Agenda

While on leave, employees will be requested to report periodically to the Town regarding the status of the medical condition, and their intent to return to work.

9. Procedure for Notice and Certification of Serious Health Condition.

On occasion, the Town may require the employee to provide notice of the need to utilize leave (where it is possible to know beforehand) and/or may require the employee to provide certification of an employee's or immediate family member's serious health condition by a qualified healthcare provider. The employee should try to respond to such a request within 10 days of the request, or provide a reasonable explanation for the delay.

Qualified health care providers include: doctors of medicine or osteopathy, podiatrists, dentists, clinical psychologists, optometrists, and chiropractors, nurse practitioners and nurse-midwives authorized to practice under State law and performing within the scope of their practice under State law.

When seeking certification of a serious medical condition, an employee should ensure that the certification form (Form WH-38l) contains the following:

a) Date when the condition began; expected duration; diagnosis; and a brief statement of treatment.

b) If an employee is seeking medical leave for his/her own medical condition, certification should also include a statement that the employee is unable to perform the essential functions of the employee's position.

c) For a seriously ill family member, the certification should include a statement that the patient requires assistance and that the employee's presence would be beneficial or desirable.

d) If taking intermittent leave or working a reduced schedule, certification should include dates and duration of treatment and a statement of medical necessity for taking intermittent leave or working a reduced schedule.

If deemed necessary, the Town may ask for a second opinion. The Town will pay for the employee to get a certification from a second doctor, which the Town will select. If there is a conflict between the original certification and the second opinion, the Town may require the opinion of a third doctor. The Town and the employee will jointly select the third doctor, and the Town will pay for the opinion. The third opinion will be considered final.

Back to Agenda

ARTICLE 37- MILITARY LEAVE

Military leave of absence, without pay, shall be granted to any employee called to active duty with the State or Federal forces for a temporary tour of duty, other than the routine annual training period. Military leave for annual training periods, not to exceed 15 days in any calendar year, shall be granted with pay. Earned vacation shall not be charged for such training period. Employees must submit their orders to be eligible for this benefit. Any employee serving his/her annual active duty training time in the National Guard or Reserves or when called to active duty as required by the State of Maine or the Federal Government, shall receive the difference between his gross weekly Town salary for the period of active duty and the amount of his gross weekly service pay for the same period. Nothing in this policy precludes the right of an employee to utilize accumulated vacation time during the period of required active service and receive both active duty pay and Town salary for the same period.

ARTICLE 38- JURY DUTY

Upon verification of service, employees selected for jury duty by any court shall be paid straight time earnings less jury pay. Earned vacation shall not be charged for such service. If an employee is dismissed from jury duty he/she must report for work immediately (if during his/her regular workday) in order to be eligible for pay benefits herein.

ARTICLE 39- WAGES

1. Beginning July 1, 2016, or as soon as the contracted is ratified, the cost of living will be 2.25 percent.
2. Beginning July 1, 2017, the cost of living will be equal to the CPI-W at a rate not less than 1% and not more than 5%.
3. Beginning July 1, 2018, the cost of living will be equal to the CPI-W at a rate not less than 0% and not more than 5%.

Effective July 1, 2017, employees will receive a $.25/hour stipend as a benefits adjustment. This stipend will not be adjusted by the COLA.

During the second year of the agreement (effective July 1, 2017), the Town agrees to fund and initiate a compensation survey.

ARTICLE 40 - PLUS RATES

In cases where an employee is required to temporarily perform duties and responsibilities of a higher classification, the employee may be paid at a rate within the salary range of the higher classification which provides an increase of at least five (5) percent above the employee's regular

Back to Agenda

base rate of pay. In order to be considered for plus rate payment, the assignment must be in excess of ten (10) consecutive work days. Plus rates will be effective at the start of additional responsibilities. The recommendation to implement plus rate payment shall be made in writing by the Department Head or employee and must be reviewed and approved by the Town Manager.

ARTICLE 41 - TOBACCO

Employees may not smoke or use other tobacco products in Town vehicles or in Town buildings.

The Town of York is committed to supporting anyone who wished to cease using tobacco products and encourages employees to contact Human Resources for assistance.

Violation of this policy is cause for disciplinary action.

ARTICLE 42- RECEIPT OF GIFTS

A town employee is prohibited from soliciting or accepting any gift, gratuity, favor, entertainment, loans, or any other item or monetary value from any person outside or within Town employment whose interests may be affected by the employee's performance or nonperformance of his/her official duties.

Acceptance of nominal gifts, such as food and refreshments in the ordinary course of business meetings, or unsolicited advertising or promotional materials such as hats, pens, note pads, calendars, etc. is permitted.

ARTICLE 43 -RECRUITMENT AND PROMOTION

All available positions (whether temporary, permanent, full or part-time) shall first be posted on departmental bulletin boards for a minimum period of five (5) work days. The posting shall include position available, position description, salary range, minimum qualifications and shift assignments. Current employees are encouraged to apply for any position for which they may be qualified. When qualified, current employees shall be given consideration for the available positions.

Back to Agenda

ARTICLE 44 - CLASSIFICATION DESCRIPTION

A description will be prepared for each position. The Description will outline the duties, responsibilities, education and skill level requirements of the position. Each employee will receive a copy of their position description when hired.

ARTICLE 45 - ANNIVERSARY DATE/EMPLOYMENT DATE

The employee's anniversary date is defined as the date of initial employment with the Town. For the purpose of calculating total service and future step increases, the employee's anniversary date as defined in this policy shall be utilized. Then an employee is promoted or moved to a new position, that employee will keep his/her initial anniversary date for use in calculating any future step increases.

ARTICLE 46 - PROBATIONARY EMPLOYMENT

All newly hired employees are considered probationary for the first six (6) months of employment. During this period, the employee's performance will be reviewed to determine competence in performing job-related assignments and appropriateness for the position, in general.

ARTICLE 47 - FULL-TIME EMPLOYMENT

Full-time Employees who have successfully completed a probationary period and are assigned to a work week of at least 30 hours or more on a continuing year round basis

ARTICLE 48 - PERFORMANCE EVALUATION

Employee performance will be evaluated on an annual basis by the appropriate supervisor in a format and procedure prescribed by the Town Manager. Employees shall have an opportunity to review and comment on their performance evaluation with the Department Head and/or appropriate supervisor. In cases where the evaluations are the basis for wage/salary increases, the evaluation must be completed and submitted to the Town Manager at least one (1) month prior to the effective date of said increase, which date shall coincide with the individual's anniversary/review date to the extent practical. In the event that no wage increase is recommended as a result of the performance evaluation the employee is entitled to request a

Back to Agenda

meeting with the Director of Public Works and the Town Manager. Any request for a meeting under this section shall be made within 30 days of the employee's receipt of the performance evaluation. An employee who does not receive a wage increase due to an unsatisfactory evaluation will be re-evaluated in six months. If the employee receives a satisfactory evaluation a wage increase will be granted at beginning on the 6 month's re-evaluation. The wage increase will not be retroactive. Each salary grade has specific step increases and pre-established maximum rates of compensation. This compensation schedule will be used in assessing salary increases for qualified personnel.

In the event an employee is due for a wage increase (according to Appendix A -wage scale) and employee's evaluation is not complete by the employee's anniversary date the schedule wage increase will become effective on his/her anniversary date.

ARTICLE 49 - TOWN PROPERTY

Employees must not, directly or indirectly, use or allow the use of Town property of any kind for other than official activities, without prior authorization from the Public Works Director. Town telephones may be used for personal business only on an emergency basis. Any personal long distance telephone calls must be charged to your home telephone number. Anyone in violation of this policy may result in disciplinary action, up to and including termination of employment.

ARTICLE 50 - PHYSICAL WELLNESS INCENTIVE

During the first year of the agreement, the Town agrees to meet with the union to discuss the implementation of a mutually agreed physical wellness incentive program. The nature of the discussions will include the substance of the program requirements as well as the incentive to be provided in the event the employees meets the program requirements. This program will be voluntary to union members.

Back to Agenda

ARTICLE 51- DURATION OF AGREEMENT

This Agreement shall be effective July 1st, 2016 and shall remain in full force and effect unless mutually agreed to amend until June 30th 2019.

Negotiations for successor Agreement shall be conducted per Title 26 MRSA, Chapter 9-A.

IN WITNESS WHEREOF, the parties hereto have set their hands and seals this_____, to be effective as of July 1st 2016.

Town of York Selectman	York DPW Association
_____	_____
_____	_____
_____	_____
_____	_____
_____	_____
_____	_____

Back to Agenda

APPENDIX A - WAGE SCALE

Town of York - Public Works Scale

2.25% Effective 7/1/2013 7/1/16

Grade	A	B	C	D	E	F	G	H	I	J	K	L
5	$16.41	$17.15	$17.97	$18.80	$19.72	$20.63	$21.64	$22.65	$23.74	$24.85	$26.05	$27.32
6	$17.15	$17.97	$18.80	$19.72	$20.63	$21.64	$22.65	$23.74	$24.85	$26.05	$27.32	$28.63
7	$17.97	$18.80	$19.72	$20.63	$21.64	$22.65	$23.74	$24.85	$26.05	$27.32	$28.63	$30.00
8	$18.80	$19.72	$20.63	$21.64	$22.65	$23.74	$24.85	$26.05	$27.32	$28.63	$30.00	$31.44
9	$19.72	$20.63	$21.64	$22.65	$23.74	$24.85	$26.05	$27.32	$28.63	$30.00	$31.44	$32.93
10	$20.63	$21.64	$22.65	$23.74	$24.85	$26.05	$27.32	$28.63	$30.00	$31.44	$32.93	$34.56
11	$21.64	$22.65	$23.74	$24.85	$26.05	$27.32	$28.63	$30.00	$31.44	$32.93	$34.56	$36.23
12	$22.65	$23.74	$24.85	$26.05	$27.32	$28.63	$30.00	$31.44	$32.93	$34.56	$36.23	$38.00
13	$23.74	$24.85	$26.05	$27.32	$28.63	$30.00	$31.44	$32.93	$34.56	$36.23	$38.00	$39.84
14	$24.85	$26.05	$27.32	$28.63	$30.00	$31.44	$32.93	$34.56	$36.23	$38.00	$39.84	$41.75
15	$26.05	$27.32	$28.63	$30.00	$31.44	$32.93	$34.56	$36.23	$38.00	$39.84	$41.75	$43.82
16	$27.32	$28.63	$30.00	$31.44	$32.93	$34.56	$36.23	$38.00	$39.84	$41.75	$43.82	$45.97

Step A, B, C, = one year
Each Step D through L = 3 years

Back to Agenda

REQUEST FOR ACTION BY BOARD OF SELECTMEN

DATE SUBMITTED: September 22, 2016	☒ ACTION
DATE ACTION REQUESTED: October 3, 2016	☐ DISCUSSION ONLY
SUBJECT: CMP Easement at 36 Main St. – follow-up	

DISCUSSION OF OPTIONS AVAILABLE TO THE BOARD: At the meeting of September 19th the Board indicated it would not act to authorize execution of the easement for CMP to provide utilities to the Town's new communications tower at 36 Main Street until a certified survey was provided and the property boundary is monumented. Verizon will stake the back corners of the lot on September 29th so we can see what the Town owns, but it will take a while longer to provide the certified boundary survey. I am asking the Board to authorize me to execute the easement with CMP upon delivery of a survey that shows the Town owns the area in question, and the location on the ground is monumented.

RECOMMENDATION: I recommend the Board view the site after September 29th to see where the boundary markers are located on the face of the earth, and assuming the back fenceline is within the Town's property boundary, that the Board authorize me to execute the easement to CMP upon delivery of the survey.

PROPOSED MOTION: I move to grant a utility easement to Central Maine Power on the property located at 36 Main Street to provide service in the existing utility easement corridor to serve the proposed new Town communications tower, and to direct the Town Manager to execute the necessary documents, both subject to the condition that a certified property boundary survey is provided to the Town to demonstrate the extend of the Town's parcel.

Prepared by Stephen H. Burns, Town Manager: _____

Back to Agenda

Stephen H. Burns

From: Manougian, Victor <Victor.Manougian@MCLANE.com>
Sent: Thursday, September 22, 2016 1:47 PM
To: Stephen H. Burns
Subject: RE: Diane Spear / York Beach Camper Park / Communications Tower at 36 Main Street [MCLANE--.FID1176117]

Perfect thanks.

MCLANE MIDDLETON PROFESSIONAL ASSOCIATION

Victor Manougian
Attorney
900 Elm Street
Manchester, NH 03101
Direct: (603) 628-1310
Mobile (617) 304-1011
website | bio | email

Manchester, NH Woburn, MA Concord, NH Portsmouth, NH Boston, MA

From: Stephen H. Burns [mailto:sburns@yorkmaine.org]
Sent: Thursday, September 22, 2016 1:44 PM
To: Manougian, Victor
Subject: RE: Diane Spear / York Beach Camper Park / Communications Tower at 36 Main Street [MCLANE--.FID1176117]

Victor,

I will ask the Board to approve execution of the easement documents at their meeting of October 3rd subject to receipt of the certified boundary survey. This assumes, of course, that the staked property corners show we own the area where the Town's communications tower and the entire base enclosure will be located.

Thanks for your help with this Victor!

Steve

Stephen H. Burns, Town Manager
York Town Hall, 186 York St., York ME 03909
(207) 363-1000
sburns@yorkmaine.org

From: Manougian, Victor [mailto:Victor.Manougian@MCLANE.com]
Sent: Thursday, September 22, 2016 12:24 PM
To: Stephen H. Burns <sburns@yorkmaine.org>
Subject: RE: Diane Spear / York Beach Camper Park / Communications Tower at 36 Main Street [MCLANE--.FID1176117]

Hi Steve: I stopped by this morning and your door was shut so I must resort to an email! The rear corners of the lot will be staked by 9/29/16 but the A&E firm needs about 30days to prepare the stamped boundary plan.

Back to Agenda

I'm hoping that once the board sees the staked corners they will allow the project to proceed with the caveat that the stamped boundary plan will provided to the Town as soon as its prepared.

Victor Manougian
Attorney
900 Elm Street
Manchester, NH 03101
Direct: (603) 628-1310
Mobile (617) 304-1011
website | bio | email

Manchester, NH Woburn, MA Concord, NH Portsmouth, NH Boston, MA

From: Manougian, Victor [mailto:Victor.Manougian@MCLANE.com]
Sent: Monday, September 19, 2016 4:33 PM
To: Stephen H. Burns
Subject: RE: Diane Spear / York Beach Camper Park / Communications Tower at 36 Main Street [MCLANE--.FID1176117]

Steve- I discussed this matter with Chip and we will have rear property corners staked.

Victor Manougian
Attorney
900 Elm Street
Manchester, NH 03101
Direct: (603) 628-1310
Mobile (617) 304-1011
website | bio | email

Manchester, NH Woburn, MA Concord, NH Portsmouth, NH Boston, MA

From: Manougian, Victor
Sent: Monday, September 19, 2016 3:34 PM
To: 'Stephen H. Burns'
Subject: RE: Diane Spear / York Beach Camper Park / Communications Tower at 36 Main Street [MCLANE--.FID1176117]

Steve- I will approach Chip about staking the two rear corners of the lot. Frankly, other than the boundary line issue, the issues about the location of the tower etc. are off the table since the Board approved the tower with notice to abutters.

Thanks.

Victor Manougian
Attorney
900 Elm Street
Manchester, NH 03101
Direct: (603) 628-1310

Back to Agenda

Mobile (617) 304-1011
website | bio | email

Manchester, NH Woburn, MA Concord, NH Portsmouth, NH Boston, MA

From: Stephen H. Burns [mailto:sburns@yorkmaine.org]
Sent: Monday, September 19, 2016 1:36 PM
To: Ralph Austin
Cc: Michael Estes; Mary Costigan; Sandra Guay; Carol Colpitts; Manougian, Victor; Robert Palmer Jr; Jonathan Speers; Dawn Sevigny Watson; Todd A. Frederick; Michael Estes; Melissa M. Avery; Douglas P. Bracy
Subject: RE: Diane Spear / York Beach Camper Park / Communications Tower at 36 Main Street

Hi Ralph,

I have received your e-mail and will provide paper copies of your communication to the Board members tonight at the meeting. I am also copying each of the members of the Board to this reply now, as well as to Victor Manougian who represents Verizon.

Attached is the meeting packet for this evening. Within this packet you'll find all the information I provided to the Board members about the property issue. To date there is nothing that has been provided by you or Diane that actually contradicts the plan prepared by Verizon's surveyor. I do understand that Verizon's plan is not a boundary survey, just as I understand the Oak Point plan is not certified and therefore cannot be relied on. Still, I find it interesting that the two plans appear to match. It seems to me the only question of substance you have raised here is where on the face of the earth the boundary falls.

The Board is faced this evening with a request to grant a utility easement to CMP for service to the communications tower. I don't have a crystal ball and don't know what the Board will do with that request. I'll try to reach you mid-morning tomorrow about this.

Take care,

Steve

Stephen H. Burns, Town Manager
York Town Hall, 186 York St., York ME 03909
(207) 363-1000
sburns@yorkmaine.org

From: Ralph Austin [mailto:rwa@woodedlaw.com]
Sent: Monday, September 19, 2016 1:20 PM
To: Stephen H. Burns <sburns@yorkmaine.org>
Cc: Michael Estes <mestes@yorkmaine.org>; Mary Costigan <mcostigan@bernsteinshur.com>; Sandra Guay <slg@woodedlaw.com>; Carol Colpitts <ccolpitts@woodedlaw.com>
Subject: Diane Spear / York Beach Camper Park / Communications Tower at 36 Main Street

Steve,

As you may know, this firm represents Diane Spear, who owns the York Beach Camper Park. We just learned that the issue of the proposed cell tower at the Police Station at 36 Main Street, as well as the boundary issue between Diane's property and the Town property, will be discussed at the Selectmen's meeting this evening. Since you obviously were

Back to Agenda

aware of Diane's concerns about the boundary between the properties, it would have been appropriate for you to have notified her of the meeting and this agenda item. I hope that you will do so in the future should this issue come before the Selectmen again.

As for the boundary issue, Diane recognizes that her grandmother, Mabel Donohue, deeded a 100 foot by 150 foot parcel to the School District in 1956. And at some later point, Diane's mother, Marjorie Gerald, granted permission to the Town to add paving onto the Campground property to enable to Town to meet parking requirements (but reserved the right to revoke that permission).

In 1987, Marge Gerald had Oak Point Associates survey the campground property; and recently Diane gave the Town a copy of that survey (portions of which you have included in the Selectmen's packet). While the copy of the survey that Diane has in her possession was not a "stamped" copy, it is a full boundary survey by a reputable survey company. The plot plan that Verizon prepared is just that – a plot plan. It is not a boundary survey and so states (see Note 17 on the plot plan). The Verizon plan shows the fence to be on Town property, and it is not. It also shows the pavement to end at the Town property, and it does not. The pavement, as noted above, goes onto Diane's property; and the fence is also on Diane's property.

Diane has concerns about the location of the cell tower being so close to her property, and concerns about the tower falling onto her property – and damaging a trailer or injuring a camper or blocking the campground road during an emergency (and I would think that the Town would have those concerns as well). I will address those issues in a subsequent letter to you. However, the purpose of this message is to focus solely on the boundary issue, since it appears that you will be discussing that issue tonight. I am not able to attend tonight's meeting, so did want to get my comments to you beforehand.

Simply put, the Verizon plot plan is inaccurate. Diane believes that tree cutting may have taken place on her property rather than on Town property. It is essential that the Town have a boundary survey prepared, showing the exact location of its and Diane's boundary lines. This is important to verify where tree cutting has taken place, and to ensure that all activity, including the placement of the tower itself, is on Town property. Until the Town provides us with a boundary survey – rather than a plot plan, which is nothing more than an estimation of where the property lines are (see Notes 18 & 19 on the plot plan) – we must insist, on Diane's behalf, that no further activity take place in that area.

I would ask that you make this message part of the record this evening at the Selectmen's meeting, and that you contact me in this regard tomorrow. Thank you.

Ralph

Ralph W. Austin, Esq.
Woodman Edmands Danylik Austin
Smith & Jacques, P.A.
234 Main Street, P.O. Box 468
Biddeford, ME 04005

Phone: 207-284-4581
Fax: 207-284-2078
rwa@woodedlaw.com
www.woodedlaw.com

CONFIDENTIALITY NOTICE: The contents in this message and any attachments are legally privileged and confidential and are intended only for the use of the designated recipient(s) stated above. If you are not the intended recipient, you may not review, copy or distribute either this message or any attachments. If you have received this message in error, please notify the sender immediately by telephone or reply e-mail and delete the entire message and any attachments. Thank you for your cooperation.

CONFIDENTIALITY: The information contained in this electronic mail message and any electronic files attached to it may be confidential information, and may also be the subject of legal professional privilege and/or

Back to Agenda

public interest immunity. If you are not the intended recipient you are required to delete it. Any use, disclosure or copying of this message and any attachments is unauthorized. If you have received this electronic message in error, please inform the sender or contact town@yorkmaine.org. This footnote also confirms that this email message has been checked for the presence of computer viruses.
The information contained in this electronic message may be confidential, and the message is for the use of intended recipients only. If you are not an intended recipient, do not disseminate, copy, or disclose this communication or its contents. If you have received this communication in error, please immediately notify me by reply email or McLane Middleton at (603) 625-6464 and permanently delete this communication. If tax or other legal advice is contained in this email, please recognize that it may not reflect the level of analysis that would go into more formal advice or a formal legal opinion.
The information contained in this electronic message may be confidential, and the message is for the use of intended recipients only. If you are not an intended recipient, do not disseminate, copy, or disclose this communication or its contents. If you have received this communication in error, please immediately notify me by reply email or McLane Middleton at (603) 625-6464 and permanently delete this communication. If tax or other legal advice is contained in this email, please recognize that it may not reflect the level of analysis that would go into more formal advice or a formal legal opinion.
The information contained in this electronic message may be confidential, and the message is for the use of intended recipients only. If you are not an intended recipient, do not disseminate, copy, or disclose this communication or its contents. If you have received this communication in error, please immediately notify me by reply email or McLane Middleton at (603) 625-6464 and permanently delete this communication. If tax or other legal advice is contained in this email, please recognize that it may not reflect the level of analysis that would go into more formal advice or a formal legal opinion.

Back to Agenda

WOODMAN EDMANDS DANYLIK AUSTIN
SMITH & JACQUES, P.A.

MEMORANDUM

TO: York Board of Selectmen

FROM: Ralph W. Austin, Esq.

CC: Stephen H. Burns, Town Manager

DATE: September 27, 2016

RE: Diane Spear / York Beach Camper Park

As you know, I represent Diane Spear, owner of the York Beach Camper Park. I had earlier sent an email message to Town Manager Stephen Burns, expressing concern about the proposed cell tower to be erected on Town of York property adjacent to Diane's property, and in particular with regard to the plot plan prepared on behalf of Verizon which we do not believe accurately reflects the boundary between Diane's property and the Town property on the face of the earth. Steve provided a copy of my email to this Board for its September 19 meeting, and the Board Members were kind enough to consider my remarks. At that meeting, the Board voted to have a formal survey of the Town property undertaken, and further decided that it would not authorize the execution of an easement to Central Maine Power Company until the survey was completed and the boundary monumented.

On September 22, Steve indicated in an email message to me that he is placing the CMP easement back on the Selectmen's Agenda for the October 3 meeting. He is requesting that the Board authorize him to execute the easement and presumably to hold the same until such time as the survey is completed. Diane opposes that motion. It simply doesn't make sense to enter into any further contracts or easements until such time as the true boundary has been determined and marked.

If the Board does agree with Steve's proposal, and authorizes the execution of the CMP easement, I would request, on behalf of Diane, that the easement be held in escrow by the Town Manager, and not delivered to Central Maine Power, until the new survey has been completed, and Diane Spear and I have an opportunity to review and comment on that survey. That, however, is not our primary position. As stated above, we believe it is important that no further action, either by document or by activity on the property,

Back to Agenda

take place until a formal boundary survey has been completed and Diane and I have had an opportunity to review and comment on the same.

Thank you for your consideration of this matter. I will not be at the October 3 meeting, but trust that you will review and consider these comments.

Ralph W. Pensto

Back to Agenda

REQUEST FOR ACTION BY BOARD OF SELECTMEN

DATE SUBMITTED: September 15, 2016	☒ ACTION
DATE ACTION REQUESTED: September 19, 2016	☐ DISCUSSION ONLY
SUBJECT: Long Sands Beach Master Plan – Long Beach Avenue Road Improvements	

DISCUSSION OF OPTIONS AVAILABLE TO THE BOARD: The Long Beach Master Plan Project involves the expansion of the existing bathhouse to the landward side. The expansion will retain/incorporate the existing building foundation footprint and will maintain the current access pedestrian and vehicle access ramps to the beach. The expansion of the Bathhouse requires the relocation of Long Beach Avenue (Route 1a) back into the Maine DOT's existing right of way. The complete streets design improves pedestrian, bicycle, and vehicle movements and parking. The project will also create public spaces that include bike racks, benches, tables, and landscaping. The road improvements create three (3) pick up and drop off areas and truck loading and unloading zones. The plan also creates four (4) handicap parking spots with wheel chair loading and unloading areas. Pedestrian road crossings have been made safer and improved to meet ADA standards. New access stairs to the beach, wider sidewalks, street lighting and multi space parking meters are included in the plan. Finally, new wheelchair accessible ramps to the beach are proposed on the north and south end of Long Sands Beach. The proposed changes eliminate sixteen (16) parking spaces in the general vicinity of the Bath House. Ten (10) of the sixteen (16) lost spaces are a result of the relocation of Long Beach Avenue to make room for the new bath house.

The relevant project history is as follows:

- On February 23, 2015 the Board of Selectmen awarded the Long Sands Beach Master Plan to Ransom Engineering Team.
- On March 20, 2015 Mike Sullivan, Steve Bradstreet and Dean Lessard met with Bill Bullard of Maine DEP for a Pre-application meeting.
- On April 13, 2015 The Board of Selectmen approved the acceptance of a Maine DOT MPI grant in the amount of $500,000.
- On May 21, 2015 Town officials and their consultants held a public participation meeting on both the Bath house and the Road Improvements.
- On October 30, 2015 the Town received the NRPA permits from Maine DEP for the installation of both Long Beach Drainage projects.
- On December 7, 2015 the Board of Selectmen reviewed individual elements for the proposed complete streets and sea wall design for Long Beach Avenue to be included in the Long Beach Master Plan.
- On February 29, 2016 the Board of Selectmen approved the award of the Long Beach Avenue Drainage Projects to SUR Construction in the amount of $567,230.
- In June of 2016 the Drainage Projects were substantially complete.

Back to Agenda

- On July 18, 2016 the Board of Selectmen approved the proposed Long Beach Avenue Road alignment.
- On September 19, 2016 Steve Bradstreet and Dean Lessard presented the Long Sands Beach Master Plan complete streets design to the Board of Selectmen.

Included with the selectmen's action form is a preliminary engineer's estimate and the proposed Long Beach Avenue Road design with complete streets, parking plan and sea wall design element improvements to be constructed in coordination with the proposed Long Sands Beach Bath House.

RECOMMENDATION: Approve the proposed Long Beach Avenue complete streets road design, including the bike and pedestrian improvements, parking changes and sea wall design elements to be constructed in conjunction with the proposed Long Sands Beach Bath House expansion.

PROPOSED MOTION: **I move to approve the proposed Long Beach Avenue complete streets road design, including the bike and pedestrian improvements, parking changes and sea wall design elements. I also move to approve the DPW to finalize the proposed design and solicit construction bids in conjunction with the proposed Long Sands Beach Bath House expansion.**

FISCAL IMPACT: $0

DEPARTMENT LINE ITEM ACCOUNT:

BALANCE IN LINE ITEM IF APPROVED: $500,000

PREPARED BY: _____Dean Lessard_____ REVIEWED BY: _____

Back to Agenda

Ransom Consulting, Inc
Opinion of Probable Construction Cost
Date: September 16, 2016
Project No: R151.06011
By: Steve Bradstreet
Checked by: Tom Nosal

Long Beach Avenue Re-Alignment, York, Maine

Pay Item	Description	Quantity	Unit	Unit Price	Cost	Funding
1	Reinforced Concrete Sidewalk	1900	SY	$110.00	$209,000.00	MPI Grant
2	Vertical Curb	25	LF	$40.00	$1,000.00	MPI Grant
3	Circular Curb	20	LF	$50.00	$1,000.00	MPI Grant
4	Vertical Tipdowns	112	LF	$50.00	$5,600.00	MPI Grant
5	Circular Tipdowns	28	LF	$60.00	$1,680.00	MPI Grant
6	New Granite Curb	800	LF	$40.00	$32,000.00	MPI Grant
7	Reset Vertical Curb	675	LF	$25.00	$16,875.00	MPI Grant
8	Detectable Warning Panel	320	SF	$75.00	$24,000.00	MPI Grant
9	Pay Stations	5	EA	$12,000.00	$60,000.00	Funded Capital
10	New Stairs to Beach	2	EA	$15,000.00	$30,000.00	MPI Grant
11	Stepped Seawall	565	LF	$250.00	$141,250.00	MPI Grant
12	Lighting Conduit (2-1" conduits)	600	LF	$15.00	$9,000.00	MPI Grant
13	Light poles and fixtures	6	EA	$4,000.00	$24,000.00	Funded Capital
14	Concrete Fencing Pedestals	50	EA	$500.00	$25,000.00	MPI Grant
15	Stamped Crosswalks (incl painting)	205	SY	$20.00	$4,100.00	DPW Operational
16	Catch Basins	2	EA	$3,000.00	$6,000.00	DPW Operational
17	12" Stormdrain	40	LF	$75.00	$3,000.00	DPW Operational
18	Adjusting Structures to Grade	2	EA	$500.00	$1,000.00	DPW Operational
19	Paving/Milling/Grading	1	LS		$150,000.00	DPW Paving
				Project Total:	**$744,505.00**	
				MPI Grant:	$496,405.00	
				Funded Capital Project:	$60,000.00	
				Funded Capital Project:	$24,000.00	
				DPW Operational Budget	$14,100.00	
				DPW Paving Budget:	$150,000.00	

Back to Agenda

Town of York

Board of Selectmen - Public Hearing

Monday, October 3, 2016
7:00pm – York Library

The Town of York Board of Selectmen will be holding a public hearing at their normally scheduled meeting to gain citizen input and feedback on the proposed Long Beach Avenue Road Improvements. Town officials along with the project engineers will be available to answer questions and listen to concerns or suggestions from residents. This is anticipated to be the last opportunity for citizen to offer input into the proposed road improvements before the Board of Selectmen move the project to final design and solicit construction bids.

The conceptual plans below were developed based on road design standards and previous public comments.

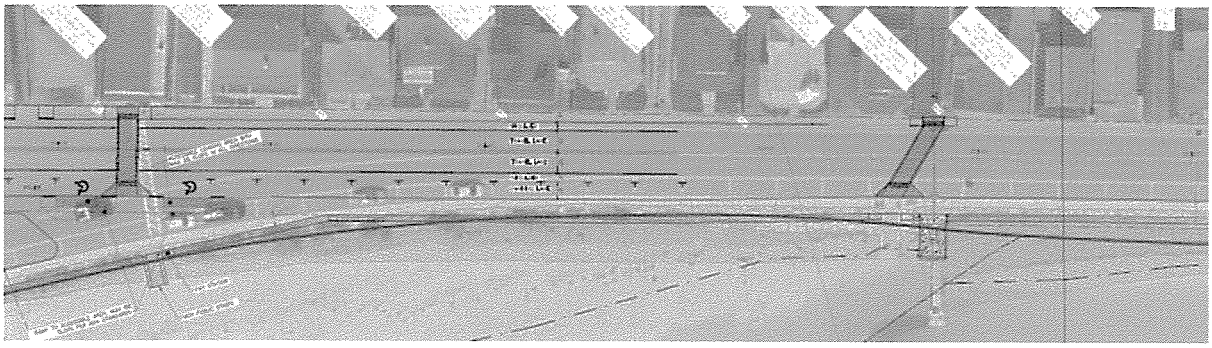

Plan sheets can be viewed on the web at www.yorkmaine.org and at the Town Hall.

Back to Agenda

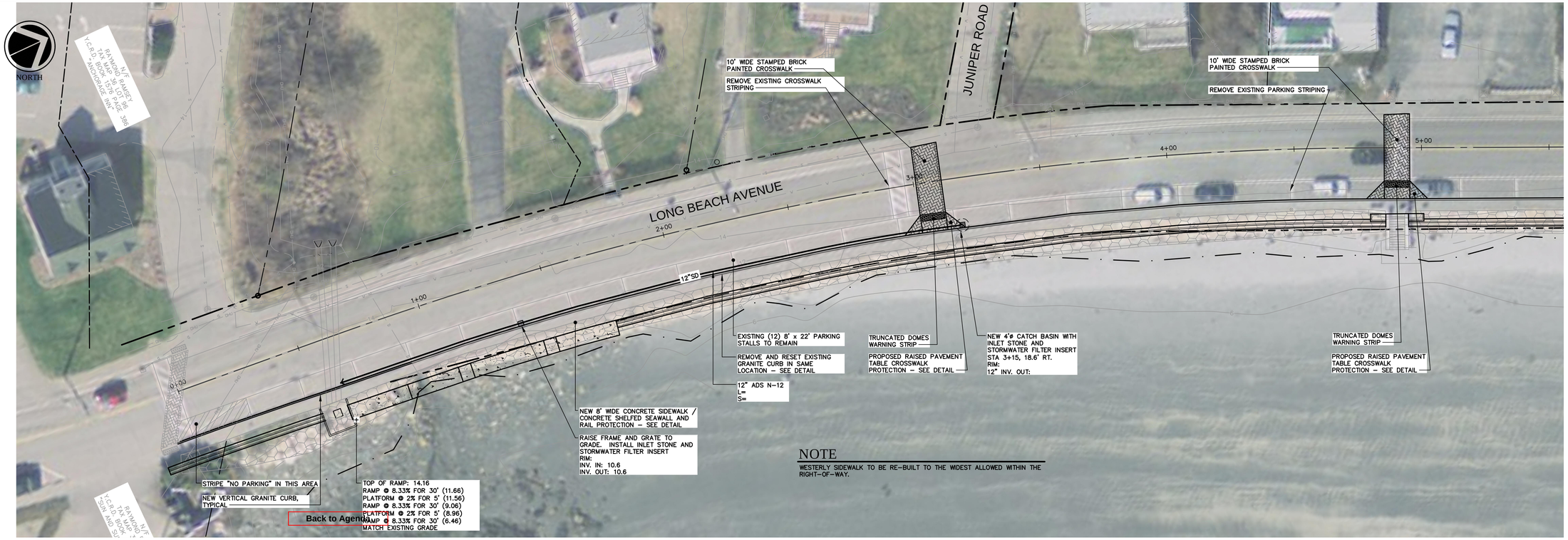

NOTE

WESTERLY SIDEWALK TO BE RE-BUILT TO THE WIDEST ALLOWED WITHIN THE RIGHT-OF-WAY.

PLAN VIEW: LONG BEACH AVENUE

STA 0+00 TO STA 5+50
SCALE: 1" = 20' (H)

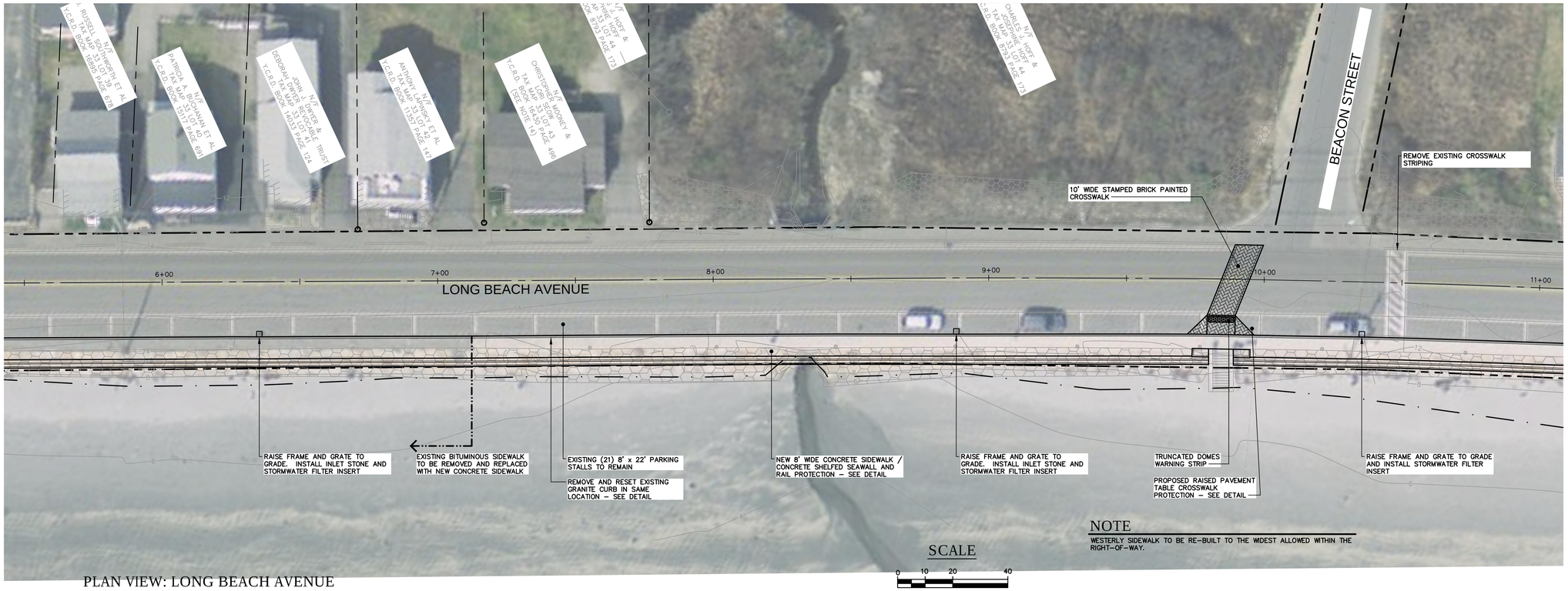

NOTE

WESTERLY SIDEWALK TO BE RE-BUILT TO THE WIDEST ALLOWED WITHIN THE RIGHT-OF-WAY.

SCALE

0 10 20 40

SCALE in FEET
1"=20'

PLAN VIEW: LONG BEACH AVENUE

STA 5+50 TO STA 11+00
SCALE: 1" = 20' (H)

Site:

LONG BEACH AVENUE IMPROVEMENTS

LONG BEACH AVENUE
YORK, MAINE

Prepared for:

TOWN OF YORK
186 YORK STREET
YORK, MAINE 03909

STATE OF MAINE
STEPHEN J. BRADSTREET #5740
LICENSED PROFESSIONAL ENGINEER

CIVIL ENGINEER:
STEPHEN J. BRADSTREET, PE #5740
400 COMMERCIAL STREET, SUITE 404
PORTLAND, ME 04101
207-772-2891

RANSOM Consulting, Inc.
400 Commercial Street, Suite 404
Portland, ME 04101
Tel. (207) 772-2891
Fax (207) 772-3248
www.ransomenv.com

PLAN AND PROFILE
STA 0+00 TO STA 11+00

No.	Revision/Issue	Date
B	10/4 SELECTMEN'S MEETING	09/27/16
A	PRELIMINARY REVIEW	07/18/16

Design by: SJB	Checked by: SJB
Drawn by: JAR	Approved by: SJB
Project: 151.06001	Date: SEPT 2016

Sheet No:

C-100

Sheet 1 of 5

NORTH

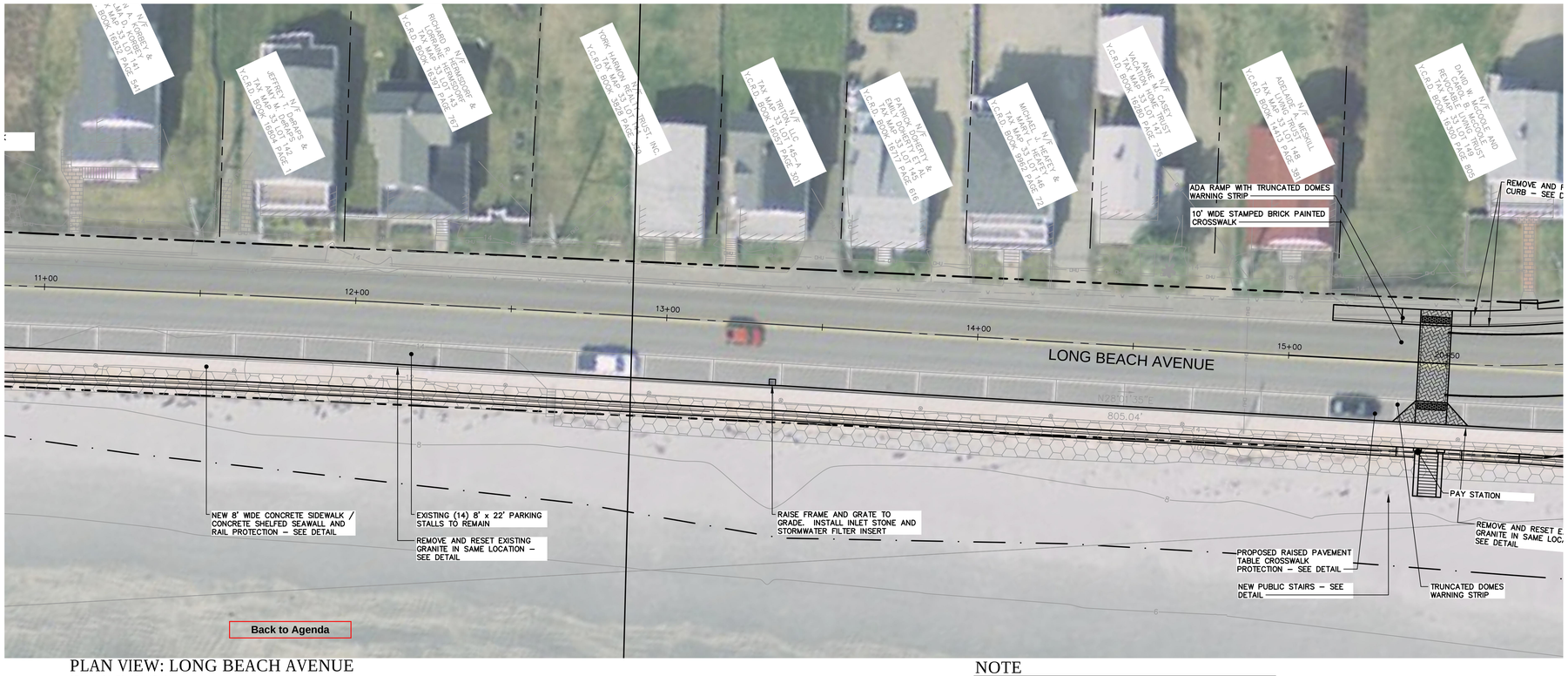

PLAN VIEW: LONG BEACH AVENUE

STA 11+00 TO STA 15+00
SCALE: 1" = 20' (H)

NOTE

WESTERLY SIDEWALK TO BE RE-BUILT TO THE WIDEST ALLOWED WITHIN THE RIGHT-OF-WAY.

NORTH

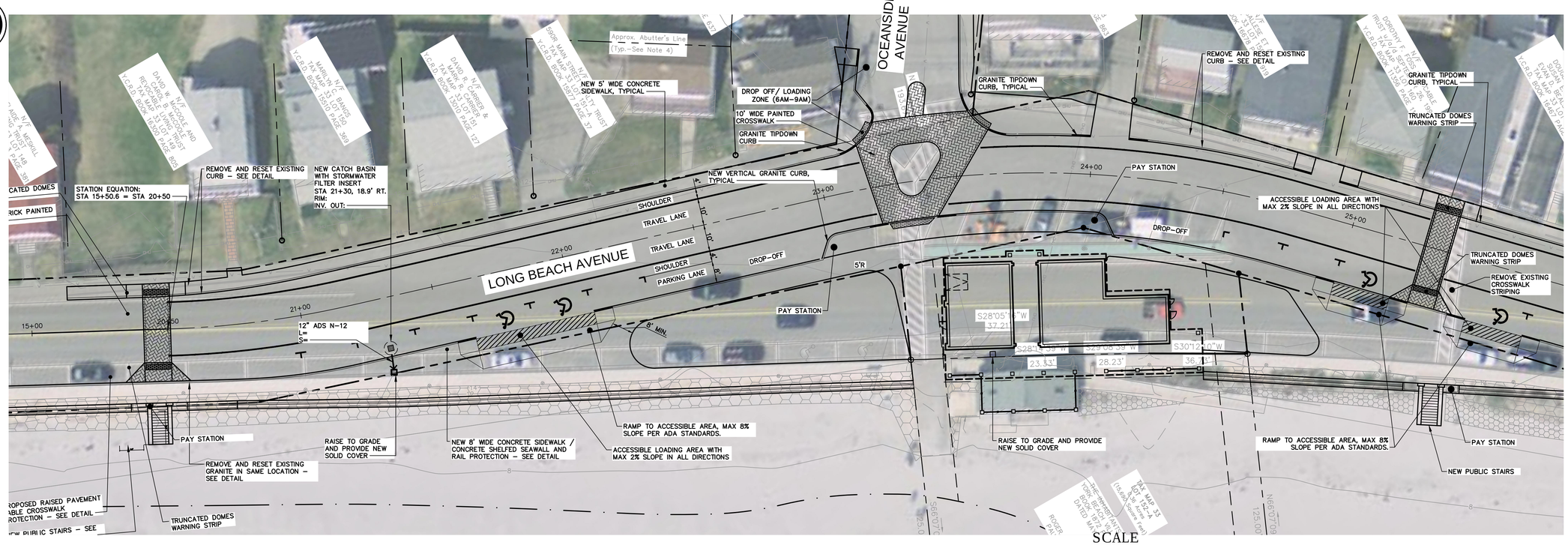

PLAN VIEW: LONG BEACH AVENUE

STA 15+00 TO STA 25+50
SCALE: 1" = 20' (H)

NOTE

WESTERLY SIDEWALK TO BE RE-BUILT TO THE WIDEST ALLOWED WITHIN THE RIGHT-OF-WAY.

SCALE

0 10 20 40

SCALE in FEET
1"=20'

Site:

LONG BEACH AVENUE IMPROVEMENTS

LONG BEACH AVENUE
YORK, MAINE

Prepared for:

TOWN OF YORK
186 YORK STREET
YORK, MAINE 03909

STATE OF MAINE
STEPHEN J. BRADSTREET #5740
LICENSED PROFESSIONAL ENGINEER

CIVIL ENGINEER:
STEPHEN J. BRADSTREET, PE #5740
400 COMMERCIAL STREET, SUITE 404
PORTLAND, ME 04101
207-772-2891

RANSOM Consulting, Inc.
400 Commercial Street, Suite 404
Portland, ME 04101
Tel. (207) 772-2891
Fax (207) 772-3248
www.ransomenv.com

PLAN AND PROFILE STA 11+00 TO STA 25+50

No.	Revision/Issue	Date
B	10/4 SELECTMEN'S MEETING	09/27/16
A	PRELIMINARY REVIEW	07/18/16

Design by: SJB	Checked by: SJB
Drawn by: JAR	Approved by: SJB
Project: 151.06001	Date: SEPT 2016

Sheet No:

C-101

Sheet 2 of 5

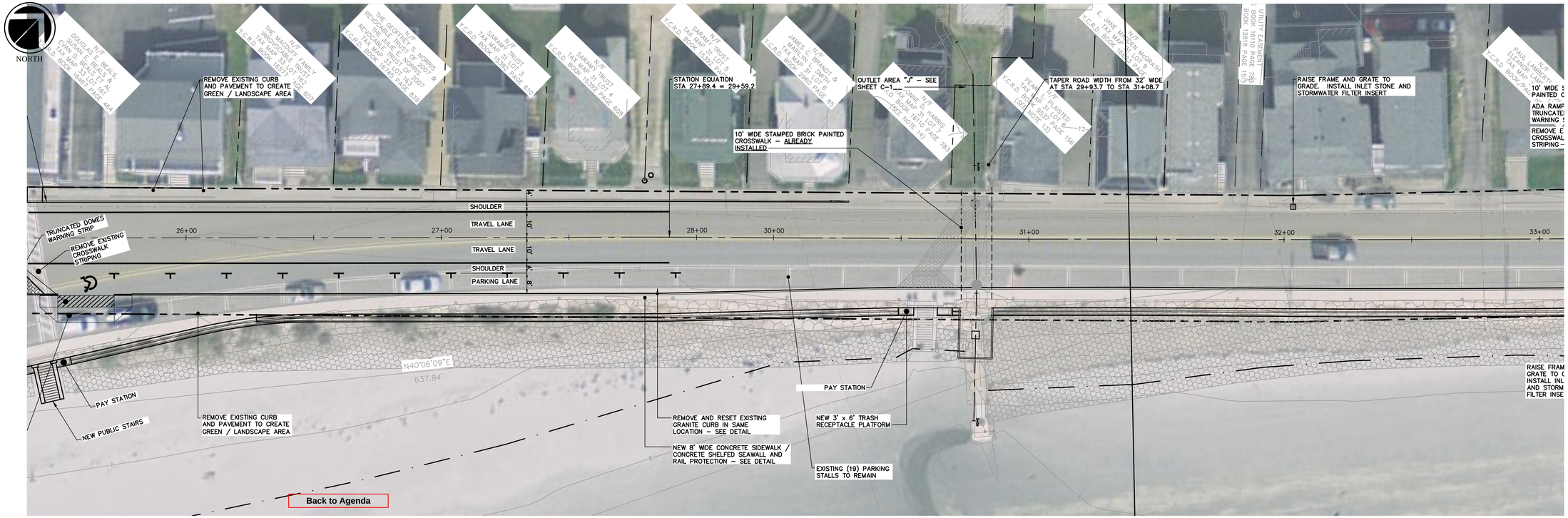

PLAN VIEW: LONG BEACH AVENUE

STA 25+50 TO STA 33+00
SCALE: 1" = 20' (H)

NOTE

WESTERLY SIDEWALK TO BE RE-BUILT TO THE WIDEST ALLOWED WITHIN THE RIGHT-OF-WAY.

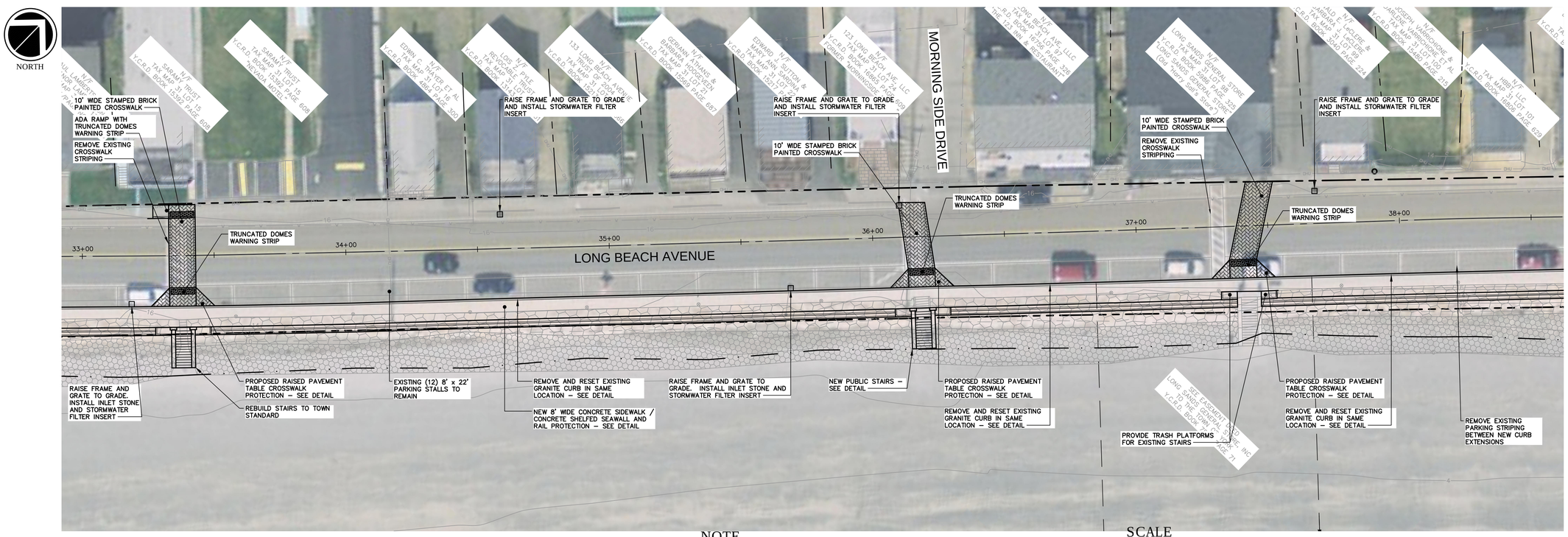

PLAN VIEW: LONG BEACH AVENUE

STA 33+00 TO STA 38+50
SCALE: 1" = 20' (H)

NOTE

WESTERLY SIDEWALK TO BE RE-BUILT TO THE WIDEST ALLOWED WITHIN THE RIGHT-OF-WAY.

SCALE

0 10 20 40

SCALE in FEET
1"=20'

Site:

LONG BEACH AVENUE IMPROVEMENTS

LONG BEACH AVENUE
YORK, MAINE

Prepared for:

TOWN OF YORK
186 YORK STREET
YORK, MAINE 03909

STATE OF MAINE
STEPHEN J. BRADSTREET
#5740
LICENSED
PROFESSIONAL ENGINEER

CIVIL ENGINEER:
STEPHEN J. BRADSTREET, PE #5740
400 COMMERCIAL STREET, SUITE 404
PORTLAND, ME 04101
207-772-2891

RANSOM
Consulting, Inc.

400 Commercial Street, Suite 404
Portland, ME 04101
Tel. (207) 772-2891
Fax (207) 772-3248
www.ransomenv.com

PLAN AND PROFILE
STA 25+50 TO STA 38+50

No.	Revision/Issue	Date
B	10/4 SELECTMEN'S MEETING	09/27/16
A	PRELIMINARY REVIEW	07/18/16

Design by: SJB	Checked by: SJB
Drawn by: JAR	Approved by: SJB
Project: 151.06001	Date: SEPT 2016

Sheet No: C-102

Sheet 3 of 5

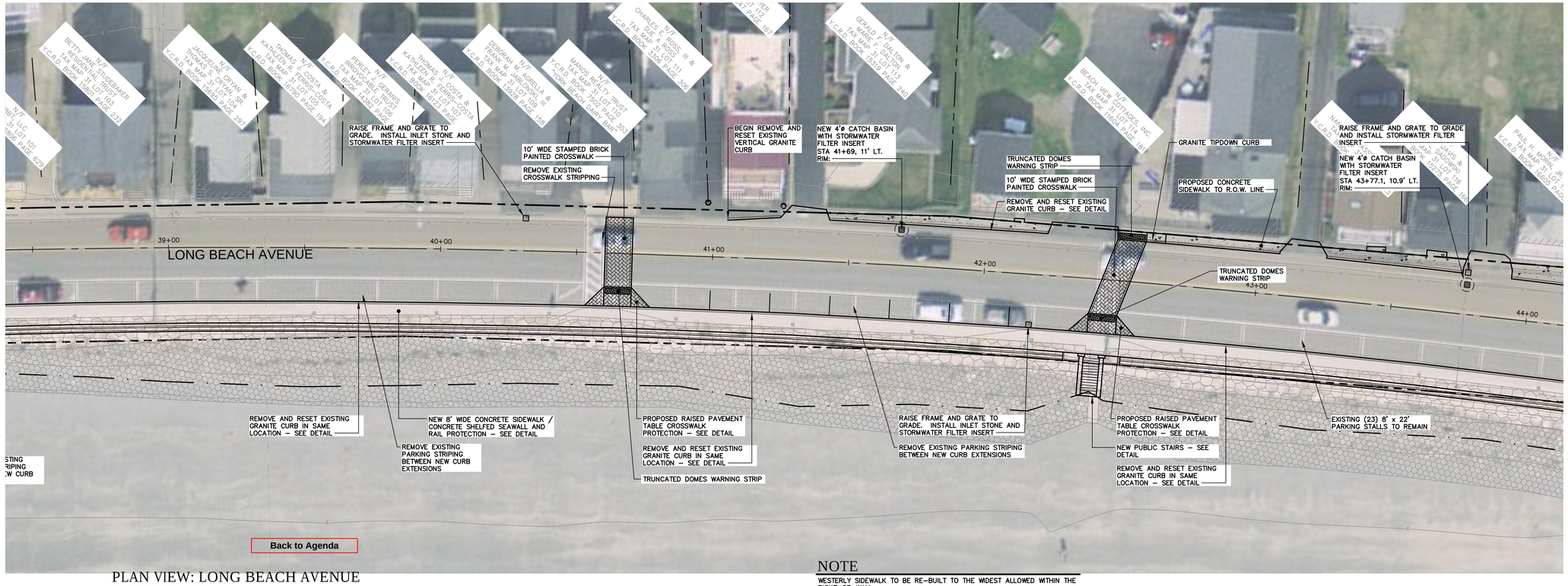

PLAN VIEW: LONG BEACH AVENUE

STA 38+50 TO STA 44+00

SCALE: 1" = 20' (H)

NOTE

WESTERLY SIDEWALK TO BE RE-BUILT TO THE WIDEST ALLOWED WITHIN THE RIGHT-OF-WAY.

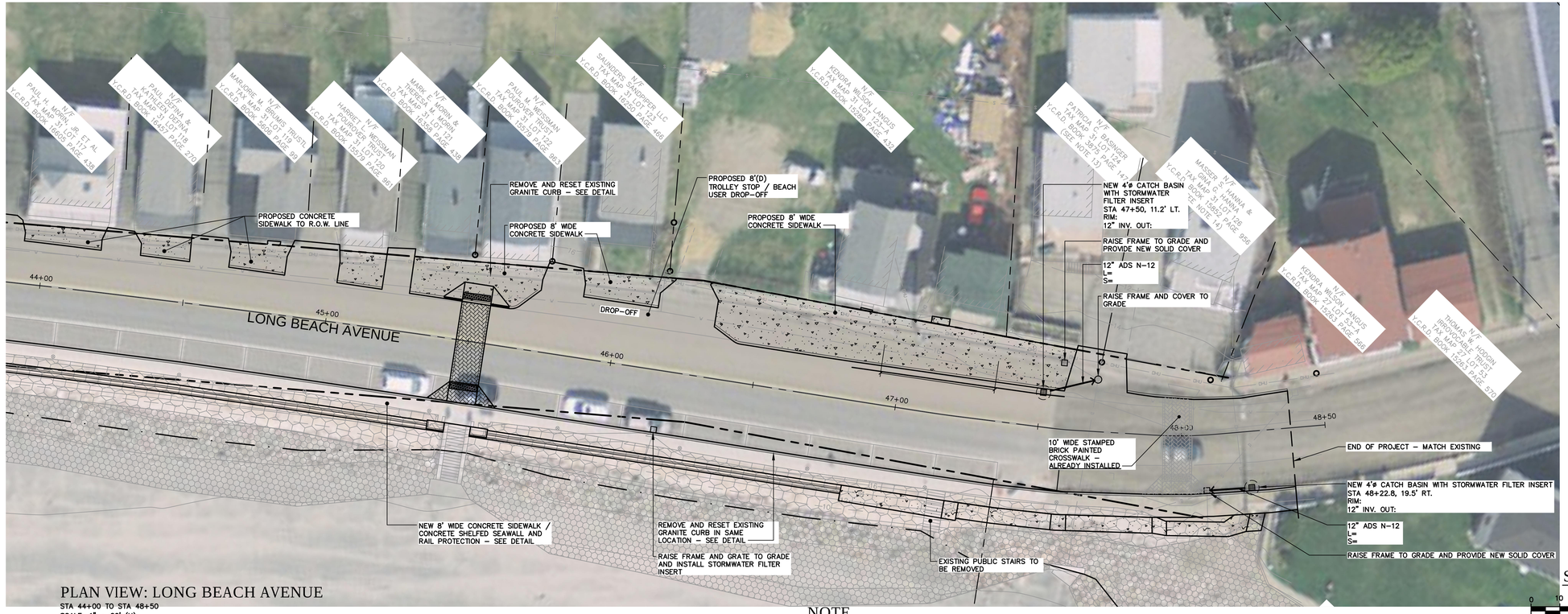

PLAN VIEW: LONG BEACH AVENUE

STA 44+00 TO STA 48+50

SCALE: 1" = 20' (H)

NOTE

WESTERLY SIDEWALK TO BE RE-BUILT TO THE WIDEST ALLOWED WITHIN THE RIGHT-OF-WAY.

SCALE

0 10 20 40

SCALE in FEET 1"=20'

Site:

LONG BEACH AVENUE IMPROVEMENTS

LONG BEACH AVENUE
YORK, MAINE

Prepared for:

TOWN OF YORK
186 YORK STREET
YORK, MAINE 03909

STATE OF MAINE
STEPHEN J. BRADSTREET #5740
LICENSED PROFESSIONAL ENGINEER

CIVIL ENGINEER:
STEPHEN J. BRADSTREET, PE #5740
400 COMMERCIAL STREET, SUITE 404
PORTLAND, ME 04101
207-772-2891

RANSOM Consulting, Inc.
400 Commercial Street, Suite 404
Portland, ME 04101
Tel. (207) 772-2891
Fax (207) 772-3248
www.ransomenv.com

PLAN AND PROFILE
STA 38+50 TO STA 48+50

No.	Revision/Issue	Date
B	10/4 SELECTMEN'S MEETING	09/27/16
A	PRELIMINARY REVIEW	07/18/16

Design by: SJB	Checked by: SJB
Drawn by: JAR	Approved by: SJB
Project: 151.06001	Date: SEPT 2016

Sheet No: C-103

Sheet 4 of 5

Back to Agenda

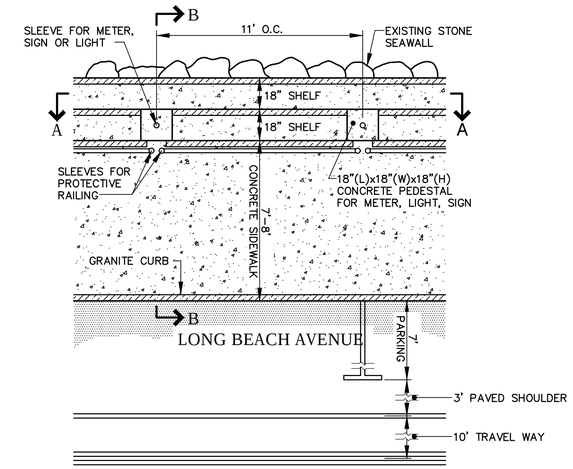

SIDE WALK DETAIL

NOT TO SCALE

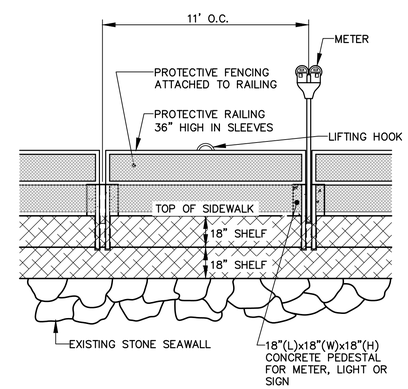

SECTION A-A

NOT TO SCALE

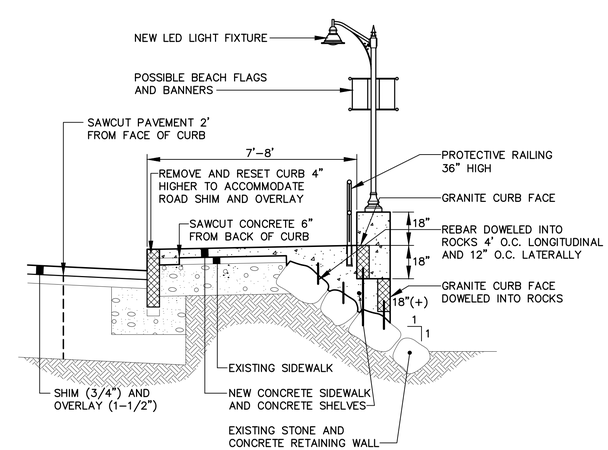

SECTION B-B

NOT TO SCALE

Site:

LONG BEACH AVENUE IMPROVEMENTS

LONG BEACH AVENUE
YORK, MAINE

Prepared for:

TOWN OF YORK
186 YORK STREET
YORK, MAINE 03909

STATE OF MAINE
STEPHEN J. BRADSTREET #5740
LICENSED PROFESSIONAL ENGINEER

CIVIL ENGINEER:
STEPHEN J. BRADSTREET, PE #5740
400 COMMERCIAL STREET, SUITE 404
PORTLAND, ME 04101
207-772-2891

RANSOM Consulting, Inc.
400 Commercial Street, Suite 404
Portland, ME 04101
Tel. (207) 772-2891
Fax (207) 772-3248
www.ransomenv.com

CONSTRUCTION DETAILS

No.	Revision/Issue	Date
B	10/4 SELECTMEN'S MEETING	09/27/16
A	PRELIMINARY REVIEW	07/18/16

Design by: SJB	Checked by: SJB
Drawn by: JAR	Approved by: SJB
Project: 151.06001	Date: SEPT 2016

Sheet No: C-104

Sheet 5 of 5

REQUEST FOR ACTION BY BOARD OF SELECTMEN

DATE SUBMITTED: September 28, 2016	☒ ACTION
DATE ACTION REQUESTED: October 3, 2016	☐ DISCUSSION ONLY
SUBJECT: Long Sands Bathhouse – Final approval and authorization to Bid	

DISCUSSION OF OPTIONS AVAILABLE TO THE BOARD: At your September 19th meeting the Board voted to postpone final approval and authorization to go to bid for the Long Sands Bathhouse project until the Mylars and findings of fact had been signed by the Planning Board. This has been completed and is back for your consideration at this time.

RECOMMENDATION: To approve the Long Sands Bathhouse project as approved by the Planning Board and authorize the Bathhouse Building Committee to put the project out to bid.

PROPOSED MOTION: I move to approve the Long Sands Bathhouse project as approved by the Planning Board and authorize the Bathhouse Building Committee to put the project out to bid.

FISCAL IMPACT: $1200

DEPARTMENT LINE ITEM ACCOUNT: Long Sands Bathhouse Capital Project

BALANCE IN LINE ITEM IF APPROVED:$645,000

PREPARED BY: _____ REVIEWED BY: _____

Back to Agenda

Findings of Fact, Conclusions of Law, & Decisions
Planning Board, Town of York, Maine
Date: August 25, 2016

Regarding an Application by:
Town of York

For: Bathhouse Replacement
Location at: Tax Map 33/ Lot 152-A

Town of York
176 Long Beach Avenue
York, Maine 03909

A. FINDINGS OF FACT

1. The street address of the property is 176 Long Beach Avenue, York, Maine 03909.

2. The current owner of the property is the Town of York.

3. Other parties to the application include:

   Civil Engineer
   Stephen J. Bradstreet, P.E
   Ransom Consulting, Inc
   400 Commercial Street, Suite 404
   Portland, Maine 04101

   Architect
   Ben Walters
   CWS Architects
   434 Cumberland Ave
   Portland, Maine 04101

   Landscape Architect
   Bob Metcalf
   Mitchell & Associates
   70 Center Street
   Portland, Maine 04101

4. The existing, 59 year old, public restroom serves the users of Long Sands Beach with 4 urinals and 1 toilet in the men's room and 5 toilets in the women's room. The building also serves as the headquarters for the lifeguards on Long Sands Beach. The building is in disrepair and cannot serve the public appropriately.

5. The design of the new facility will provide 4 urinals and 1toilet in the men's room and 10 toilets in the women's room. The building will provide a lifeguard/first aid room, storage room, year round toilet, mechanical/janitor room and changing rooms. The building provides

Back to Agenda

a safer environment for users and provides needed area for lifeguard's to maintain beach safety.

6. The base zoning district in which the property is located is RES-7.

7. The overlay district(s) in which the property is wholly or partially located to are as follows:

    a. Town of York Flood Zone "AO" with a known depth of 1'

    b. Town of York-Shoreland Zone

8. Other relevant regulatory districts in which the property is wholly or partially located or related to are as follows:

    a. Flood Plain

    b. State of Maine Geological Survey Costal Sand Dune "D1"

9. The materials submitted as part of this application included the following items:

    a. Completed Planning Board Application Form

    b. Plot Plan – Exhibit A

    c. Correspondence with York Water District – Exhibit B

    d. Correspondence with York Sewer District – Exhibit C

    e. Correspondence with York Fire Department – Exhibit D

    f. Correspondence with York Police Chief – Exhibit E

    g. Erosion and Sedimentation Control Narrative – Exhibit F

    h. Construction Costs – Exhibit G

    i. Parcel Deed – Exhibit H

    j. Waiver requests previous granted – Exhibit I

    k. Response to Zoning Ordinance Article 6.3 – Exhibit J

    l. Site Development Plans

        i. C-100 – Existing Conditions Plan

        ii. C -101 – Site Layout and Utility Plan

        iii. C -102 – Grading and Drainage Plan

        iv. C -103 – Construction Details

Back to Agenda

v. L1 – Landscape Site Improvement

vi. L2 – Master Plan

vii. A1.01 – Floor Plan

viii. A3.01 – Building Elevations and Sections

ix. A3.02 – Building Elevations and Wall Sections.

10. The Planning Board considered the application at 3 Public Meetings. The Sketch Plan was considered on June 9, 2016 and the Preliminary Plan on July 28, 2016 and a final review and approval on August 25th 2016. The Selectman also considered the application at 2 Public Meetings, June 8, 2015 and June 27, 2016. There have also been 3 Public Informational Meetings on May 21, 2015, May 19, 2016 and June 30, 2016.

11. Dates on which the Board conducted a Public Hearing on the application can be found in # 10 above.

12. The following elements of the design were noted in Public Testimony:

    a. The height of the building was 27'-8" with a two story building and now it is 23' – 6" with a 1 story building.

    b. The sized of the building compared to the existing building.

    c. The building program requires more facilities.

    d. Drop off area for beach goers.

    e. Building materials will meet flood proofing requirements.

    f. New bathhouses on west side of the road

    g. Use of portable toilets all along beach.

    h. Solar power on the bathhouse roof.

    i. Landscaping amenities, provided for seating, foot showers, bike racks and soft/hardscape improvements.

    j. Ledge Blasting

    k. Testimony regarding the road re-alignment – crosswalks, traffic control, u-turns, truck unloading is not applicable to this project.

Back to Agenda

B. CONCLUSIONS OF LAW

The Planning Board and Code Enforcement Officer have permitting jurisdiction over this application as follows:

- The property is located within floodplain and therefore requires Planning Board review for compliance with the Floodplain Management Ordinance.

- The property located within Shoreland Zone and therefore requires Planning Board review compliance with the Shoreland Overlay District Land use Standards and permit requirements per zoning Article 8.2.5.3.

In its review of this application, the Planning Board determined the proposal was in conformance with the Town's Comprehensive Plan, Zoning Ordinance, and the Site Plan Regulations. The application was subject to Site Plan Review due to Article 4.2.1.3 of the York Zoning Ordinance. The application meets all the criteria for approval outline in the Site Plan Regulations as follows:

1. Pollution. The development will not result in undue water or air pollution.

2. Sufficient Water. The development has sufficient water available for the reasonably foreseeable future.

3. Municipal Water Supply. The development will not cause an unreasonable burden on an existing municipal water supply system.

4. Erosion. The development will not cause unreasonable soil erosion or a reduction in the capacity of the land to hold water so that a dangerous or unhealthy condition results.

5. Traffic. The development will not cause unreasonable highway or public road congestion or unsafe conditions with respect of use of existing highways and/or public roads.

6. Sewage Disposal. The development will improve existing conditions and provide for adequate sewage waste disposal and will not cause an unreasonable burden on Municipal Services.

7. Municipal Solid Waste Disposal. The development will include solid waste disposal provisions and will not cause an unreasonable burden of the Town's ability to dispose of solid waste.

8. Aesthetic, Cultural and Natural Values. The development will not have an undue adverse effect on the scenic or natural beauty of the area, aesthetics, historic sites, significant wildlife habitat, rare and irreplaceable natural areas or any public rights for physical or visual access to the shoreline.

9. Conformity with Local Ordinances and Plans. The development is in conformance with the Regulations, Zoning and other Town land use codes, and the Comprehensive Plan based upon the Planning Board's interpretation of these Ordinances and Plans.

10. Technical and Financial Capacity. The Town has adequate financial capacity to meet the required standards.

11. Surface Waters. The development will not adversely affect the quality or unreasonably affect the nearby ocean outfall.

12. The developments will not, alone or in conjunction with existing activities, adversely affect the quality or quantity of the groundwater.

13. Flood Areas. Based on the Federal Emergency Management Agency's Flood Boundary and Floodway Maps, and Flood Insurance Rate Maps, the proposed development is located within tidal flood zone "AO". A building Flood Proofing Certificate will be prepared to verify that all building criteria will be met.

14. Freshwater Wetlands. There are no freshwater wetlands within the proposed development.

15. River, Stream, or Brook. There are no river, stream, or brook within or abutting the proposed development.

16. Storm Water. The proposed development will provide for adequate storm water management.

17. Spaghetti Lots are prohibited. No lots are being created.

18. Lake Phosphorus Concentration. There are no great ponds that can be affected by this development.

19. Impact on Adjoining Municipality. The development does not cross municipal boundaries.

Back to Agenda

C. DECISIONS

On August 25, 2016, the Planning Board reviewed this application and approved the application.

1. Waivers granted during this application review process for:

    1. 6.3.5. e-Impact statement for stormwater management - The existing bathhouse site, adjacent road and sidewalks are entirely impervious areas. The new bathhouse, while larger, will be constructed with a larger pedestrian friendly area that consists of seating areas, tables, shade structures, but most importantly, pervious areas of sand, beach grasses and natural rock areas. These areas will not only be for pedestrian use but act as stormwater quality treatment but reducing the amount of impervious area. The reduction in road area also reduces the petroleum and salts that are deposited on the road and collected by the stormdrain system to outfall onto the beach. The Town has purchased catch basin stormwater filter inserts for all the catch basins on Long Beach Avenue. These will be installed along Long Beach Avenue and around the bathhouse. The stormwater filters will provide water quality control and meet the Municipal Separated Storm Sewer (MS4) requirements. Furthermore, since the site is directly adjacent to the ocean and the impervious area is being reduced, there are no requirement stormwater quantity requirements to be met.

    2. 6.3.5.h-Impact statement for water quality – See 6.3.5 e above.

    3. 6.3.5.m-Impact statement for public school enrollment explanation - There are no residential units in this project so no impact to school enrollment and bussing.

    4. 6.3.8-Traffic impacts - There are no parking impacts as determined by Zoning Article 15-A. The road re-alignment and associated on-street parking modifications have been reviewed and approved by the Town Public Works Director.

    5. 6.3.12-Phosphorus pollution - This project is not within the watershed of a great pond.

    6. 6.3.15-Watersheds in the Town - The project's stormwater directly outfalls to the ocean.

    7. 6.3.16-Plant or animal habitats or areas of ecological significance - The project is not within any of the plant or animal habitats or areas of ecological significance.

    8. 6.3.24.2-Private sewage disposal- Not applicable. On public sewer.

    9. 6.3.25.2-Wells – Not applicable. On public water.

    10. 6.3.27-Stormwater management – See 6.3.5.e.

Back to Agenda

11. 6.3.29-Temporary markers – The site is very accessible and temporary markers are not required.

12. 6.3.32-High intensity soil survey – A HISS is not required for the building relocation.

13. 6.3.33-Traffic impacts analysis – There is no on-site parking and the on-street parking has been reduced therefore a traffic analysis is not required.

14. 6.3.35-Planning board review fee - This is a Town project so the Planning Board review fee is not required.

2. The following decisions were determined by the Planning Board during the review process:

    a. Shoreland Zone Permit – Approved

    b. Floodplain Management Ordinance – Approved

3. The Planning board voted on August 25, 2016 to grant approval to the application 5-0 with conditions that the following items are to be incorporated into the design and/or noted on final mylars to be submitted to the Planning Board prior to signing drawings:

    a. Any required State or Federal permits must be obtained prior to the issuance of a building permit

Dated Sept. 22, 2016

Back to Agenda

REQUEST FOR ACTION BY BOARD OF SELECTMEN

DATE SUBMITTED: September 29, 2016	☒ ACTION
DATE ACTION REQUESTED: October 3, 2016	☐ DISCUSSION ONLY
SUBJECT: Authorization for design and permitting of a new garage facility at the site of the new police facility at 9 Hannaford Drive	

DISCUSSION OF OPTIONS AVAILABLE TO THE BOARD: see attached memo

RECOMMENDATION: To approve authorization for Project Manager Geoff Aleva of Civil Consultants to design and permit a separate garage facility for the new police facility at 9 Hannaford Drive.

PROPOSED MOTION: I move for the Board to authorize Geoff Aleva of Civil Consultants to design and obtain all of the necessary permits and approvals for construction of a new garage facility for the police station located at 9 Hannaford Drive

FISCAL IMPACT: TBD

DEPARTMENT LINE ITEM ACCOUNT: 229.0000.8001

BALANCE IN LINE ITEM IF APPROVED: $2,536,283.25

PREPARED BY: Chief Douglas Bracy REVIEWED BY: _____

Back to Agenda

TOWN OF YORK, MAINE
Police Department

Douglas P. Bracy
Chief of Police

Mailing Address:
36 Main Street
York, Maine 03909

Dispatch:
Non-Emergency
(207) 363-4444

Administration:
(207) 363-1031

Facsimile:
(207) 361-6818

www.yorkpolice.org

Committed to excellence

MEMORANDUM

DATE: September 29, 2016

TO: Town Manager Stephen Burns

CC: Board of Selectmen

FROM: Chief Douglas Bracy DPB

SUBJECT: AUTHORIZATION OF DESIGN PROCESS FOR NEW STORAGE FACILITY AT SITE OF NEW POLICE STATION ON HANNAFORD DRIVE.

The construction of the new Police facility at 9 Hannaford Drive is well underway and is on budget with no significant change orders to date. As had been discussed previously with both the Building Committee and Board of Selectmen. The police department is in need of a garage facility for storage of equipment. Back in 2012 the voters approved a plan which called for a 3,600 square foot garage and storage facility. The building was going to be used to house equipment and dry storage of records and other items for both the Police department and the Town Offices. It is essential to preserving the hundreds of thousands of dollars in equipment that we currently own in trailers, boats, and other items that are left to the weather or storage in private facilities for a fee.

Although it is too early to estimate the completion cost of the new facility, it is the feeling of myself, the Building Committee and Project Manager that we will be able to complete the new station and possibly more with the funds available. I believe it would be prudent for the Town to direct our Project Manager Geoff Aleva to begin the work to design a garage/storage facility, establish a cost for it, and obtain the necessary

Back to Agenda

permits and approvals for the garage/storage facility for the department on this site so if the funding is available we would be able to come to the Board for authorization. It would also allow us if necessary to seek the authorization. It would also enable us if necessary to seek capital funding if necessary to complete this project.

Some of my thoughts for doing this now are that we are going to need to pave and finish landscaping the current project in the spring. If we were fortunate enough to be able to have funding than I would delay this until the heavy lifting for building a storage facility is done so we don't cause any damage to pavement or landscaping or create duplication of costs by having to do it twice. It may also prove advantageous to utilize the current contractor to build the facility where they are already mobilized on site and provide a very good bid to complete the new police facility. Lastly, I like dealing with knowns and not unknowns. This authorization and work would give us a clear picture of what can be build and what it might cost if the opportunity presents itself to be done as it is truly needed.

Back to Agenda

REQUEST FOR ACTION BY BOARD OF SELECTMEN

DATE SUBMITTED: September 27, 2016	☒ ACTION
DATE ACTION REQUESTED: October 3, 2016	☐ DISCUSSION ONLY
SUBJECT: Street Light Energy Consultant – Services Agreement Amendment	

DISCUSSION OF OPTIONS AVAILABLE TO THE BOARD:
York hosts ~880 street lights (SLs) and poles owned by CMP, which charges a monthly flat fee per fixture. State law enables municipalities to purchase their SLs from CMP directly or work with contractors to upgrade SLs under a few procurement business models. The Maine PUC has adopted standards, requirements and fees for municipal SL purchases and upgrades. These regulations were finalized in June 2016 allowing the Town to issue an RFP following voter approval of the project and funding.

The Town can now upgrade its SLs with new Light Emitting Diode (LED) technologies that provide better light at 40%–70% lower energy and maintenance costs and last much longer than current SLs. LEDs can improve public safety with better visibility, decrease light pollution and environmental impacts, and enable programmable controls. Installed cost is estimated to be in the range of $500 to $1,000 per fixture.

Relavant project history:

- On May 27, 2015 the Town released a Request for Proposals (RFP) for an Energy Consultant for the Town of York Street Light Project. The RFP was sent to a relatively large list of 20 potential bidders. In addition, the RFP was advertised in the York Weekly, Portsmouth Herald, and Portland Press Herald.
- On June 9, 2015 a pre-bid meeting was held.
- On June 22, 2015 the Board of Selectmen awarded the consultant services bid to outline ESPC options, prepare an RFP and to assist the Town in selecting to streetlight turnkey vendor to Celtic Energy.
- In August of 2015 Celtic Energy conducted an information meeting for York department heads, boards and committees.
- In September of 2015 Celtic Energy conducted a workshop with the Board of Selectmen.
- On October 19, 2015 the Board of Selectmen approved the streetlight project as ESPC, contingent on voter approval May 2016.
- On May 21, 2016 York voters approved the proposed streetlight capital project budget.
- On June 30, 2016 York's contract with Celtic energy expired.

Back to Agenda

Included with this action form is Celtic Energy's proposed contract modification for the town's street light project. The contract modification extends the services agreement to June 30, 2017. It also modifies the schedule for project implementation and requests an increase of $5,000 to the $20,000 flat fee originally approved. Also included is the expired services agreement.

RECOMMENDATION: The Energy Steering Committee and the Department of Public Works recommend that the Board vote to approve the contract modification as proposed by Celtic Energy.

PROPOSED MOTION: I move to approve the contract modification dated September 21, 2016 extending the existing contract to June 30, 2017, Modifying the implementation schedule and increasing the consulting flat fee for sevices by $5,000 as proposed by Celtic Energy.

FISCAL IMPACT: $5,000

DEPARTMENT LINE ITEM ACCOUNT:

BALANCE IN LINE ITEM IF APPROVED:

PREPARED BY: Dean Lessard REVIEWED BY: _____

Back to Agenda

Celtic Energy

September 21, 2016

Dean Lessard
Public Works Director
Town of York
186 York St
York, ME 03909

RE: Revised proposal for street light retrofit contract modification

Dear Dean,

EXECUTIVE SUMMARY: In follow up to the voters' approval of the proposed street light LED retrofit project on May 21st 2016, Celtic Energy Inc. (CEI) stands ready to resume work. CEI proposes to modify the term of the consulting services agreement between CEI and the Town of York (the Town), executed in July 2015 with an original term from July 1st 2015 to June 30th 2016. We propose an extension to June 30th 2017, in order to allow fulfillment of the scope of work on a schedule described below. (This extends our request from the December 31, 2016 date proposed in our letter of June 23, 2016.) CEI also respectfully requests an expansion of our fee for services by $5,000, due to factors described below. Both proposed modifications are discussed below.

Proposed Schedule Modification

As mentioned above, CEI requests a contract extension through June 2017 to perform the contracted scope of work (SOW) of consulting support for and through selection of a lighting upgrade contractor and negotiation of a contract for implementation, as described in pages 16–17 of our contract with the Town (attached for reference). CEI proposes the following project implementation schedule in 2016–2017, to be revised in discussion with the Town:

CEI submit to Town draft RFP for review: October 28th or date TBD with Town
Comments back from Town: November 11th or 18th (2–3 weeks from draft submittal)
CEI and Town complete final RFP: November 23rd or December 2nd (2–3 weeks)
Issue RFP: Early January or date TBD by Town
CEI support at pre-bid meeting: Mid to late January 2017 or TBD (2–3 weeks after RFP release)
RFP response deadline: Early to mid February 2017 or TBD (2–4 weeks after pre-bid meeting)
Contractor selection: Late Feb-early March 2017 or TBD (2–3 weeks after response deadline)

This schedule assumes the Town will review documents, provide comments, provide related information and make decisions promptly and thoroughly. We recognize that the Town may wish to accelerate or slow the schedule described above. CEI is flexible and will do its best to accommodate the Town's scheduling preferences, particularly schedule extensions. For example if the procurement process is extended into early 2017, CEI anticipates it will still be possible to complete contractor selection (and possibly construction) by the end of June 2017.

Proposed Fee Modification

As mentioned above, CEI respectfully requests an expansion of our flat fee by an additional $5,000 to complete the contracted SOW of consulting support for and though contractor selection and negotiation of the implementation agreement, as described in pages 16–17 of our contract with the Town (attached for reference). This request is made in consideration of the greater than anticipated effort researching and tracking the evolving regulatory and procedural developments involving the Maine PUC, Central Maine Power and the Maine Street Lighting Group; the protracted Town stakeholder engagement process leading up to the decision to submit the project to the referendum process; and the extended schedule. We have conducted three of the maximum five site visits described in the contract, and anticipate at least three more to fulfill the scope of work through contractor selection and implementation agreement completion.

We look forward to continuing work with the Town on this project. Please contact me and our project manager Chris Lotspeich with questions or comments. If this proposal meets your requirements as described herein, please have an authorized representative of the Town accept the terms by signing below. Or if the Town prefers, you may issue us your own revised contract, Addendum, Purchase Order or other document referencing the terms of this proposal.

PLEASE NOTE: Our address has changed from the location we occupied at the time of contract award in July 2015. Our current address is: 437 Naubuc Ave, Suite 106, Glastonbury, CT 06033.

Best Regards,

Chris Halpin

Chris Halpin, P.E.
President

CC: Steve Burns, Town Manager, Town of York
Rozanna Patane, Chair, York Energy Steering Committee
Steven Wells, CEI Executive Director of Engineering
Chris Lotspeich, CEI Director of Sustainability Services
Dawn Rausch, CEI Finance Controller

As an authorized representative of the Town of York I accept the terms of this proposal and am converting it to a Task Order so work may resume.

_____	_____	_____
Authorized Representative	Title	Date

Back to Agenda

Energy Consultant for Town of York Street Light Project
SERVICES AGREEMENT

THIS AGREEMENT is made this twenty-sixth day of June, 2015 by and between the Town of York, a municipal corporation existing under the laws of the State of Maine and located in the County of York, State of Maine (hereinafter "TOWN") and Celtic Energy, Inc. of Glastonbury, Connecticut (hereinafter "CONTRACTOR"),

WITNESSETH:

In consideration of the mutual covenants and conditions contained herein, the TOWN and the CONTRACTOR agree as follows:

I. SCOPE OF SERVICES

The CONTRACTOR shall furnish all of the services, materials and perform all of the work as described in the Request for Proposals and Specifications entitled: Request for Proposals for Energy Consultant for Town of York Street Light Project issued under date of May 27, 2015 by Stephen H. Burns, Town Manager and shall do so in accordance with the Contractor's Proposal dated June 15, 2015 and the follow up email from Chris Lotspeich, on behalf of the CONTRACTOR, to Beth Della Valle, on behalf of the TOWN, dated June 17, 2015, which Request for Proposals, Specifications and Proposals and emailed response to the follow up question are attached hereto and made a part hereof (hereinafter, collectively referred to as the "Services"), and the CONTRACTOR covenants that it shall do everything required by this Agreement, the conditions of the Agreement (together with the General, Supplementary and other Conditions, if any), the Request for Proposals, the Specifications, the Drawings and the Proposal in return for payment as provided herein.

A. The CONTRACTOR shall be responsible for the professional quality, technical accuracy, timely completion, and the coordination of all analyses, reports, and other Services furnished by the CONTRACTOR under this Agreement. The CONTRACTOR shall, without additional compensation, correct or revise any errors or deficiencies in his analysis, reports, and other Services. Deficiencies are defined as willful or negligent acts that distort or falsify the state of the art of the products and Services developed and provided hereunder, or willful or negligent nonassignment of personnel or assignment of unqualified personnel to perform the duties hereunder.

B. Approval by the TOWN of analyses, reports, and other services furnished hereunder shall not in any way relieve the CONTRACTOR of responsibility for the technical adequacy of the work. Neither the TOWN's review, approval, or acceptance of, nor payment for, any of the Services shall be construed to operate as a waiver of any rights under this Agreement or any cause of action arising out of the performance of this Agreement, and the CONTRACTOR shall remain liable in accordance with applicable law for all damages to the TOWN caused by the

Back to Agenda

CONTRACTOR's willfully negligent performance of any of the Services furnished under this Agreement.

II. CONTRACTOR OBLIGATIONS

The CONTRACTOR warrants:

A. That it will furnish all vehicles, materials, personnel, tools, and equipment, except as otherwise specified herein, and do everything necessary and proper to satisfactorily perform the Services required by this Agreement.

B. That it is financially solvent, is experienced in and competent to perform the Services, and is able to furnish the vehicles, materials, personnel, tools, and equipment to satisfactorily perform the Services required by this Agreement.

C. That it is familiar with all federal, State, and local statutes, laws, rules, regulations, ordinances, and orders which may in any way affect the Services.

D. That it has carefully examined the Request for Proposals, the Specifications, and this Agreement and has conducted its own investigation of the nature and location of the Services, the character of equipment and personnel needed to perform the Services, and all conditions which may in any way affect the performance of the Services.

E. That any increase in CONTRACTOR'S costs during the term of this Agreement shall be the sole responsibility of the CONTRACTOR.

III. TOWN OBLIGATION

The TOWN warrants:

A. That the Director of Public Works, Dean Lessard, shall be the project manager and point of contact for the CONTRACTOR under this Agreement. The Director of Public Works shall administer and interpret this Agreement, receive and authorize payment for services, and resolve questions with respect to scope and performance of Services under this Agreement.

B. That it will make available appropriate personnel and representatives of the TOWN to answer specific questions and provide general consultation throughout the performance of Services. The personnel and representatives shall work diligently to develop their responses and recommendations in a timely manner.

IV. COMPLETION OF SERVICES/COMPLETION DATE

The Services to be performed under this Agreement shall be commenced by July 1, 2015 and substantially completed on or before June 30, 2016.

Back to Agenda

V. CONTRACT PRICE

The TOWN shall pay the CONTRACTOR for the performance of Services under this Agreement the sum of twenty-thousand dollars ($20,000).

VI. PROGRESS PAYMENTS

The CONTRACTOR shall submit for the TOWN'S approval, monthly invoices for the Services performed hereunder in the previous month. The TOWN shall review invoices submitted by the CONTRACTOR and shall pay invoices within two (2) weeks of authorization for payment once work has been reviewed and found acceptable by the TOWN.

VII. WORK OUTSIDE OF THE SCOPE OF SERVICES

If the TOWN requests the CONTRACTOR to perform work outside of the Scope of Services during the term of the Agreement, the TOWN shall compensate the CONTRACTOR on an hourly fee based on the following schedule:

Chris Halpin	$300/hour
Jim Pagliaro	$215/hour
Chris Lotspeich	$230/hour
Daniel Clements	$150/hour
Walt Donzilla	$230/hour

VIII. GUARANTEE

The CONTRACTOR represents that in the performance of its obligations hereunder, it will perform in accordance with applicable standards of conduct for professionals in the field. Where an engineer's stamp or seal is required in the conduct of such Services, the documents shall be stamped by a professional engineer registered in the State of Maine.

IX. PERMITS AND LICENSES

Permits and licenses necessary for the prosecution of the Services shall be secured and paid by the CONTRACTOR.

X. TOWN'S RIGHT TO TERMINATE CONTRACT

Without prejudice to any other right or remedy, the TOWN may terminate this Agreement for cause by providing the CONTRACTOR and its surety with seven (7) days' written notice of termination. For purposes of this Agreement, cause includes, but is not limited to: the adjudication of the CONTRACTOR as a bankrupt; the making of a general assignment by the CONTRACTOR for the benefit of its creditors; the appointment of a receiver because of the CONTRACTOR's insolvency; the CONTRACTOR's persistent or repeated refusal or failure, except for cases in which extension of time is provided, to supply enough properly-skilled workers or proper materials to perform the Services; the CONTRACTOR's persistent disregard of federal, state or local statutes, laws, codes, rules, regulations, orders or ordinances; and the

Back to Agenda

CONTRACTOR's substantial violation of any provisions of this Agreement. In the event of a termination for cause, the TOWN may take possession of the premises and of all materials, tools and appliances thereon and finish the Services by whatever method it may deem expedient. In such case the CONTRACTOR shall not be entitled to receive any further payment until the Services are finished. If the unpaid balance of the Agreement price shall exceed the expense of finishing the Services, including compensation for additional architectural, managerial, and administrative services, such excess shall be paid to the CONTRACTOR. If such expense shall exceed such unpaid balance, the CONTRACTOR shall pay the difference to the TOWN.

Further, the TOWN may terminate this Agreement for convenience upon thirty (30) days' written notice to the CONTRACTOR, in which case, the TOWN shall pay the CONTRACTOR for all Services satisfactorily performed and materials purchased up to the date of receipt of such notice by the CONTRACTOR. In the event that the TOWN terminates this Agreement for cause and it subsequently is determined that cause did not exist, such termination shall be deemed to be for convenience.

XI. INSURANCE

Except as otherwise provided by this Agreement, the CONTRACTOR and its subcontractors and consultants shall obtain and maintain, throughout the term of this Agreement and for a period of at least two years following the completion of Services under this Agreement, at no expense to the TOWN, the following insurance coverages:

A. **Public Liability Insurance** in the amount of not less than four-hundred-thousand dollars ($400,000) or such other amount as is established by the Maine Tort Claims Act (14 M.R.S.A. §8101 et seq.) as amended from time to time, combined single limit, to protect the CONTRACTOR, any subcontractor performing Services under this Agreement, and the TOWN from claims and damages that may arise from operations under this Agreement, whether such operations be by CONTRACTOR or by a subcontractor or by anyone directly or indirectly employed by them.

B. **Automobile Liability Insurance** in the amount of not less than four-hundred-thousand Dollars ($400,000) or such other amount as is established by the Maine Tort Claims Act (14 M.R.S.A. §8101 et seq.) as amended from time to time, combined single limit, to protect the CONTRACTOR, any subcontractor performing work covered by this Agreement, and the TOWN from claims and damages that may arise from operations under this Agreement, whether such operations be by CONTRACTOR or by a subcontractor or by anyone directly or indirectly employed by them.

C. **Workers' Compensation Insurance** in amounts required by Maine law and **Employer's Liability Insurance,** as necessary, as required by Maine law. In case any class of employees engaged in hazardous work under this Agreement is not protected under the Workers' Compensation Act, the CONTRACTOR shall, at its own expense, provide for the protection of its employees not otherwise protected. (NOTE: Small contractors may not be eligible for Workers' Compensation.)

Back to Agenda

D. **Professional Liability Insurance** in the amount of four-hundred-thousand Dollars ($400,000) for this project alone to protect the CONTRACTOR, any subcontractor performing Services under this Agreement and the TOWN from claims and damages that may arise from the errors, omissions or negligence of the CONTRACTOR or its subcontractors, if any, in the performance of Services under this Agreement.

The provisions of this Article shall not be construed as providing a shorter limitation for claims against design professionals than that established by 14 M.R.S.A. §752-A as it may be amended from time to time.

E. All such insurance policies shall name the TOWN and its officers, agents and employees as additional insured, except that for purposes of workers' compensation insurance, the CONTRACTOR and its subcontractors instead may provide a written waiver of subrogation rights against the TOWN. The CONTRACTOR, prior to commencement of Services under this Agreement, and any of its subcontractors, prior to commencement of Services under any subcontract, shall deliver to the TOWN certificates satisfactory to the TOWN evidencing such insurance coverages, which certificates shall state that the CONTRACTOR and its subcontractors must provide written notice to the TOWN at least thirty (30) days prior to cancellation, non-renewal, material modification or expiration of any policies, evidenced by return receipt of United States Certified Mail. Replacement certificates shall be delivered to the TOWN prior to the effective date of cancellation, termination, material modification, or expiration of any such insurance policy. The CONTRACTOR shall not commence Services under this Agreement until it has obtained all insurance coverages required under this subparagraph and such insurance policies have been approved by the TOWN, nor shall the CONTRACTOR allow any of its subcontractors to commence Services on any subcontract until all such insurance policies have been obtained by the subcontractor and approved by the TOWN. All such insurance policies shall have a retroactive date which is the earlier of the date of this Agreement between the parties or the CONTRACTOR's Commencement of Services hereunder.

XII. INDEMNIFICATION

The TOWN and the CONTRACTOR agree to defend, indemnify, and hold each other harmless, including each of their respective officers, agents, and employees, against any and all liabilities, causes of action, judgments, claims, or demands, including attorney's fees and costs, for personal injury (including death) or property damage arising out of or caused by the performance of Services under this Agreement by the TOWN, the CONTRACTOR, its subcontractors, agents, or employees; provided however, this indemnification shall not extend to liability, causes of action, judgments, claims or demands, including reasonable attorney's fees and costs resulting from the negligence or willful misconduct of the indemnified party.

XIII. ASSIGNMENT

Neither party to the Agreement shall assign this Agreement or sublet it as a whole without the written consent of the other, nor shall the CONTRACTOR assign any prior moneys due or to become due to it hereunder, without the previous written consent of the TOWN.

Back to Agenda

XIV. SUBCONTRACTS

The CONTRACTOR shall not sublet any part of this Agreement without the prior written permission of the TOWN. The CONTRACTOR agrees that it is fully responsible to the TOWN for the acts and omissions of its subcontractors and of persons either directly or indirectly employed by them, as it is for the acts and omissions of persons directly employed by it.

XV. FINAL PAYMENT

Final payment, constituting the entire unpaid balance for the Contract Sum, shall be paid by the TOWN to the CONTRACTOR when the Services have been completed, the Contract fully performed, and, if applicable, a final Certificate for Payment has been issued by the TOWN.

XVI. OWNERSHIP OF DOCUMENTS

All drawings, notes, documents, plans, and specifications, or other material to be developed under this Agreement shall become the property of the TOWN and be promptly delivered to the TOWN upon the completion of Services under this Agreement or sooner upon the TOWN's request or the termination of this Agreement. The CONTRACTOR shall be responsible for the protection and/or replacement of any work or materials in its possession, including work or materials provided to the CONTRACTOR by the TOWN. The TOWN agrees that it will not use the construction plans and specifications developed under this Agreement for any project other than the project specified herein without the written consent of the CONTRACTOR, which consent shall not be unreasonably withheld.

XVII. DISCLAIMER

The CONTRACTOR has inspected the conditions of the premises and with full knowledge thereof agrees to take them as is, with no warranties express or implied excepting those express statements in this Agreement.

XVIII. FORCE MAJEURE

Provided such party gives written notice to the other of such event, a party shall not be liable for its failure to perform its respective obligations under this Agreement, if prevented from so doing by any cause beyond the reasonable control of such party such as, but not limited to, strikes, lockouts, or failure of supply or inability by the exercise of reasonable diligence, to obtain supplies, parts, or employees necessary to perform such obligations, or because of war or other emergency. The time within which such obligations shall be performed shall be extended for a period of time equivalent to the delay from such cause.

XIX. NON-WAIVER

Except as expressly provided in this Agreement, the failure or waiver, or successive failures or waivers on the part of either party hereto, in the enforcement of any paragraph or provision of this Agreement shall not render the same invalid nor impair the right of either party hereto, its

Back to Agenda

successors or permitted assigns, to enforce the same in the event of any subsequent breach thereof.

XX. NOTICES

Notices hereunder shall be deemed sufficient if sent by U.S. Certified mail as follows:

TO TOWN: Dean Lessard, Director of Public Works
Town of York
186 York Street
York, ME 03909

TO CONTRACTOR: Chris Halpin, President
Celtic Energy, Inc.
701 Hebron Avenue
Glastonbury, CT 06033

XXI. REMEDIES

Except as otherwise agreed by the parties in writing, all disputes, claims, counterclaims, and other matters in question between the TOWN and the CONTRACTOR arising out of or relating to this Agreement shall be decided by a Maine court of competent jurisdiction. This Agreement is made and shall be construed under the laws of the State of Maine. Except as otherwise expressly agreed by the parties in writing, exclusive venue for any such civil action shall be in Maine.

XXII. COMPLIANCE WITH APPLICABLE LAWS

The CONTRACTOR agrees that it and its subcontractors, if any, shall comply with all applicable federal, State, and local statutes, laws, rules, regulations, codes, ordinances, orders, and resolutions in the performance of Services under this agreement.

XXIII. RELEASE OF INFORMATION

During the performance of the Services, any material, prepared or assembled by the CONTRACTOR under this Agreement shall not be made available to any individual or organization by the CONTRACTOR other than as called for herein without prior written authorization from the TOWN.

XXIV. EXTENT OF AGREEMENT

Back to Agenda

This Agreement (and the proposal attached hereto and hereby incorporated into this Agreement) represent(s) the entire and integrated Agreement between the TOWN and CONTRACTOR and supersedes all prior negotiations, representations, or agreements, either written or oral. This Agreement may be amended only by written instrument signed by both the TOWN and CONTRACTOR.

IN WITNESS WHEREOF, the parties hereto have executed this Agreement on the day and year first above written.

Witness	TOWN By: _____ (DATE) 7/6/2015 Town/City Manager
Witness	CONTRACTOR By: _____ (DATE) Its: President

Back to Agenda

Attachment 1

REQUEST FOR PROPOSALS FOR
Energy Consultant for Town of York Street Light Project

I. INTRODUCTION

The Town of York, Maine (hereinafter, the "Town") is seeking sealed Proposals for energy consulting services to guide the Town in its goal of replacing its existing street lights with LED fixtures.

Proposers must submit one hard copy and/or one pdf of its Proposal. All hard copies of the Proposal are to be submitted in a sealed envelope clearly marked on the outside "Energy Consultant for Town of York Street Light Project". All pdfs of the Proposal are to be submitted either via email with a subject heading "Energy Consultant for Town of York Street Light Project" or in a sealed envelope clearly marked on the outside "Energy Consultant for Town of York Street Light Project".

Completed proposals must be received at the Town Manager's Office in the York Town Office, at 186 York Street, York Maine 03910, by 9:00 a.m., on Monday, June 15, 2015, and will be opened at that time.

In addition, interviews with Proposers will be conducted at the York Town Office on June 15, 2015, starting at 1:00 p.m.

The successful Proposer will be required to produce evidence satisfactory to the Town that it and its subcontractors, if any, have secured public liability, automobile, workers' compensation, and professional liability coverage as set forth in Exhibit 3 by Thursday, June 25, 2015, and to sign a standard Town Services Agreement, substantially similar to what is attached in Exhibit 3, by Friday, June 26, 2015.

All questions regarding this Request for Proposals should be asked at the Pre-Bid Meeting, to be held at 2:00 p.m. on Tuesday, June 9, 2015 at the conference room on the second floor of the York Town Office. Any questions that are not answered at the Pre-Bid Meeting will be addressed by a written interpretation in the form of a numbered Addendum, which will be posted on the Town's website (www.yorkmaine.org) not later than three (3) days prior to the scheduled opening of the Proposals. Proposers shall acknowledge receipt of all Addenda in the space provided therefore in the Proposal Form, whether the Addenda are in response to questions or otherwise issued by the Town.

Each Proposer is required to state in the Proposal:

1. its name, principals, mailing address, and telephone number;
2. the name, telephone number, and email address for its Contact Person;
3. the names, titles, mailing address, and telephone numbers for all subcontractors that will be used on this project; and

Back to Agenda

4. a statement that no person acting for or employed by the Town is directly or indirectly interested in the Proposal or any agreement which may be entered into to which the Proposal relates or in any portion of the profits herefrom.

Each Proposer is encouraged to visit the Town of York to inform itself of the conditions relating to the current siting of street lights. Failure to do so will not relieve a successful Proposer of its obligations to furnish all equipment, material, and labor necessary to carry out the provisions of the Agreement and to complete the contemplated work for the consideration set forth in this Request for Proposals. The Town disclaims any and all responsibility for injury to Proposers, their agents, or others while examining the work site or at any other time. Proposers are responsible for all of their costs in preparing and submitting proposals hereunder.

Proposers must submit one hard copy and/or one pdf of its Proposal. Proposal forms furnished by the Town in Exhibit 2 shall be used and strict compliance with the requirements of this Request for Proposals is necessary.

II. SCOPE OF SERVICES

The Scope of Services hereunder is described in the Specifications attached hereto (hereinafter, the "Services") as Exhibit 1.

III. SCHEDULE

All proposals shall conform with the following schedule to complete proposed work:

1. Proposer shall be available for an interview on Monday, June 15, 2015, starting at 1:00 p.m.
2. Proposer shall submit documentation of required insurance by Thursday, June 25, 2015.
3. Proposer shall sign a standard Town Services Agreement by Friday, June 26, 2015.
4. Work shall begin in July 2015.
5. Work shall be completed by June 31, 2016, unless the completion date is extended by the Town.

III. PROPOSAL SUBMISSION REQUIREMENTS

The Proposal must include the following descriptions, and except for the Proposal Form and resumes of project personnel, may not exceed twenty (20) pages in length:

1. Proposal Form (Exhibit 2).
2. Understanding of the Project.
3. Qualifications/technical capacity of the Proposer and its subcontractors, if any.
4. Three to five similar projects completed by the contractor, including names, titles, phone numbers, and email addresses of references for the projects.

Back to Agenda

5. All materials, equipment, and labor necessary to perform the Services, including the name of the person(s) or entity(entities) owning the materials and equipment and/or providing the personnel that forms the basis for its proposal.
6. Additional submissions specified in Exhibit 1.
7. Identification of project manager, staff who will undertake the proposed work; role and approximate percentage of work conducted by each staff member.
8. Total cost and cost of specified components of the proposed work and a clear description of all clarifications and exceptions.
9. Compliance with or proposed modification of specified schedule.
10. Assumptions and/or conditions associated with the Proposal.

All Services to be furnished to the Town shall be performed with equipment, methods, and use of personnel in accordance with pertinent professional standards and with the Occupational and Safety and Health Act requirements of the State of Maine and the United States.

IV. SELECTION CRITERIA

Proposals will be evaluated based on the following criteria:

1. Understanding of and familiarity with the project and related Maine statutes and regulations (20%)
2. Prior experience with similar projects (20%)
3. Qualifications and experience of assigned staff (25%)
4. Cost (25%)
5. References (10%)

V. ACCEPTANCE/REJECTION

The Town reserves the right to waive any informalities in proposals, to accept any proposal, and to reject any or all proposals, should it be deemed in the best interest of the Town to do so.

Proposals may be held by the Town for a period not to exceed thirty (30) days from the date of the opening of proposals for the purpose of reviewing proposals and investigating the qualifications of the Proposers prior to the award of a contract.

Date: May 27, 2015

By: Stephen H. Burns, Town Manager

Exhibit 1

Energy Consultant for Town of York Street Light Project
Scope of Services

The Town of York is soliciting proposals for an energy consultant to help it identify the best approaches to replace its system of approximately 830 street lights with LED fixtures to reduce

Back to Agenda

energy use and cost, estimated at 60-80% of current operating costs ($145,000 budgeted for FY 2016).

The street light replacement project is expected to include the following components:

- Design – inventory current lights, identify best types and configurations of replacement lights, complete engineering specifications, negotiate lease cancellations with Central Maine Power (CMP), identify "phantom lights" and any compensation due for any that are identified
- Build – remove old lights and install new ones in coordination with CMP
- Operate – ensure all lights are functioning as designed during contract term
- Maintain – service and replacement as necessary for contract term
- Measure and Verify – report annually on performance of installed lights as compared to expected performance

The Proposer will provide a comprehensive service to assist the Town in all aspects of the street light project to achieve the project goal of reducing the amount and cost of energy used through installation of a townwide LED street light system. In evaluating and selecting options for how to proceed, the Town is seeking input on designing systems that minimize ongoing demands on Town administration and staff. The Proposer will work with the Town's Energy Steering Committee and staff in all aspects of the street light project from evaluating design options and technical lighting specifications, to selecting vendors, supervising the installation and maintenance of the street lights, and later, to evaluating the vendor's performance reports.

Project Goal

Replace approximately 830 existing street light fixtures in the Town of York, Maine, on existing or new poles, depending on the design options selected, with new LED light fixtures.

Some of the decisions the energy consultant will help the Town make include:

- selecting the most appropriate financing, management, procurement, and networking options;
- selecting the most appropriate specifications and designs;
- selecting the area(s) for phased installation, if the entire Town is not done at one time;
- preparing requests for proposals (RFP) or requests for qualifications(RFQ);
- selecting the best vendors to supply, install, and maintain the new lights;
- overseeing engineering, construction, performance, and closeout of contracts for the project;
- evaluating the post-installation measurement and verification reports; and
- other unanticipated elements.

The following project scope identifies requested services as they are currently understood and/or anticipated. The Town has budgeted $20,000 for these services. If the budget is not adequate to cover all of the anticipated tasks, the Proposer is invited to submit a proposal for what services it

Back to Agenda

is willing to provide for this fee and how the Town might secure the full range of services, including a reduction in scope and/or phased provision and budgeting of services.

Project Scope

The scope of services for the York LED Street Light Project includes the following items:

1. Interaction/coordination with appropriate Town staff, for example, the Director of Public Works, Police Chief, Fire Chiefs, etc.
2. Attend specified number of meetings with Energy Steering Committee, the Board of Selectmen, other committees and/or boards, and the general public which are designated by the Town as the Proposer guides the Town through its decision making process.
3. Review and evaluate existing conditions for lighting quality and general fixture condition.
4. Review existing Town lighting standards.
5. Review Maine Public Utility Commission regulations and standard contracts.
6. Review Efficiency Maine incentive programs and determine requirements for eligibility.
7. Help the Town identify potential grant funds, incentives, and/or other financial efficiencies to plan for and/or implement this project.
8. Develop recommendations for replacement of LED fixture heads, including evaluation and comparison of photometric performance, including illumination requirements, uniformity, color quality, light trespass and glare control, fixture quality, maintainability, first cost, maintained cost, and manufacturer warranty. Compare existing fixtures with proposed LED fixtures.
9. Prepare lighting analysis and calculations of proposed replacement LED fixture heads for representative locations on major arterial, collector streets and subdivision streets.
10. Recommend and develop illumination standards for typical roadway applications in the Town.
11. Prepare fixture specifications indicating approved fixture manufacturers, catalog numbers, light source type, color temperature, CRI, fixture voltage and wattage, optical control assembly, mounting configuration, and finish.
12. Ensure that the vendor(s) coordinates with Efficiency Maine for incentive program eligibility and application for incentives.
13. Assist the Town with pre-qualifying vendors.
14. Write the RFP or RFQ and circulate it for a high response.
15. Evaluate bidders and proposals based on industry experience.
16. Assess contract with selected vendor.
17. Oversee the Design and Build phases.
18. Test installed lights to ensure they meet specifications and are maintained.
19. Review annual performance reports.
20. Provide measurement, verification, and Investment Grade Audit review.

The Proposer shall provide the following submissions as part of its proposal:

Schedule

The Proposer will provide expected lead time after approval of submittals.

Back to Agenda

Qualifications

The Proposer shall provide a description of its familiarity with relevant Maine statutes, Public Utility Commission street light regulations and standard contract, and work undertaken successfully in Maine.

Back to Agenda

Attachment 2
Services
Energy Consultant for Town of York Street Light Project

The TOWN of York is soliciting proposals for an energy consultant to help it identify the best approaches to replace its system of approximately 830 street lights with LED fixtures to reduce energy use and cost, estimated at 60-80% of current operating costs ($145,000 budgeted for FY 2016).

The street light replacement project is expected to include the following components:

- Design – inventory current lights, identify best types and configurations of replacement lights, complete engineering specifications, negotiate lease cancellations with Central Maine Power (CMP), identify "phantom lights" and any compensation due for any that are identified
- Build – remove old lights and install new ones in coordination with CMP
- Operate – ensure all lights are functioning as designed during contract term
- Maintain – service and replacement as necessary for contract term
- Measure and Verify – report annually on performance of installed lights as compared to expected performance

The Proposer will provide a comprehensive service to assist the TOWN in all aspects of the street light project to achieve the project goal of reducing the amount and cost of energy used through installation of a townwide LED street light system. In evaluating and selecting options for how to proceed, the TOWN is seeking input on designing systems that minimize ongoing demands on Town administration and staff. The Proposer will work with the Town's Energy Steering Committee and staff in all aspects of the street light project from evaluating design options and technical lighting specifications, to selecting vendors, supervising the installation and maintenance of the street lights, and later, to evaluating the vendor's performance reports.

Project Goal

Replace approximately 830 existing street light fixtures in the TOWN of York, Maine, on existing or new poles, depending on the design options selected, with new LED light fixtures.

Some of the decisions the energy consultant will help the TOWN make include:

- selecting the most appropriate financing, management, procurement, and networking options;
- selecting the most appropriate specifications and designs;
- selecting the area(s) for phased installation, if the entire Town is not done at one time;
- preparing requests for proposals (RFP) or requests for qualifications(RFQ);
- selecting the best vendors to supply, install, and maintain the new lights;
- overseeing engineering, construction, performance, and closeout of contracts for the project;

Back to Agenda

- evaluating the post-installation measurement and verification reports; and
- other unanticipated elements.

Project Scope

The scope of services for the York LED Street Light Project, as defined in the Town's RFP, includes the following items:

1. Interact/coordinate with appropriate Town staff; for example, the Director of Public Works, Police Chief, Fire Chiefs, etc.

2. Attend specified number of meetings with Energy Steering Committee, the Board of Selectmen, other committees and/or boards, and the general public which are designated by the TOWN as the Proposer guides the TOWN through its decision making process.

3. Review and evaluate existing conditions for lighting quality and general fixture condition.

4. Review existing Town lighting standards.

5. Review Maine Public Utility Commission regulations and standard contracts.

6. Review Efficiency Maine incentive programs and determine requirements for eligibility.

7. Help the TOWN identify potential grant funds, incentives, and/or other financial efficiencies to plan for and/or implement this project.

8. Develop recommendations for replacement of LED fixture heads, including evaluation and comparison of photometric performance, including illumination requirements, uniformity, color quality, light trespass and glare control, fixture quality, maintainability, first cost, maintained cost, and manufacturer warranty. Compare existing fixtures with proposed LED fixtures.

9. Prepare lighting analysis and calculations of proposed replacement LED fixture heads for representative locations on major arterial, collector streets and subdivision streets.

10. Recommend and develop illumination standards for typical roadway applications in the TOWN.

11. Prepare fixture specifications indicating approved fixture manufacturers, catalog numbers, light source type, color temperature, CRI, fixture voltage and wattage, optical control assembly, mounting configuration, and finish.

12. Ensure that the vendor(s) coordinates with Efficiency Maine for incentive program eligibility and application for incentives.

13. Assist the TOWN with pre-qualifying vendors.

14. Write the RFP or RFQ and circulate it for a high response.

15. Evaluate bidders and proposals based on industry experience.

Back to Agenda

16. Assess contract with selected vendor.

17. Oversee the Design and Build phases.

18. Test installed lights to ensure they meet specifications and are maintained.

19. Review annual performance reports.

20. Provide measurement, verification, and Investment Grade Audit review.

The CONTRACTOR assumes that the TOWN will provide all available documentation regarding the current street lights and cooperate on discovering any other information that becomes necessary to the successful completion of the project tasks. The CONTRACTOR also believes the above Scope items 3,8,9,10,11, & 18 can be performed in whole or in part by the selected contractor as part of the project, under the supervision of the TOWN and the CONTRACTOR.

The CONTRACTOR proposes to perform Scope items 1,2,4-7,12-16 up through selection of vendor and negotiation of the vendor contract for implementation, for $20,000. Included in this fee, the CONTRACTOR will also perform part of Scope items 3,8,9,10, & 11 in order to pre-qualify the general nature and scope of the project, and develop a comprehensive and quality RFP for the vendor selection. Due to this tight budgetary constraint, the CONTRACTOR must limit the number of days we are available for meetings to five (5); more meeting days could be held if additional travel expenses could be reimbursed by the TOWN. We do not believe that any special materials, equipment or labor are required from the TOWN for the CONTRACTOR to perform its duties on this project. The CONTRACTOR's work under this proposal should be completed by June 30, 2016 as requested.

If the project proceeds, the CONTRACTOR will also perform Scope items 17, 19 & 20 as well as quality control on the contractor's work on the other Scope items for a fee to be negotiated with the TOWN based on project size and complexity. Our fees for these services are typically in the range of 1%-3% of project costs. Please note that all our fees are recoverable through the project financing.

The scope described above is further clarified to include the CONTRACTOR's response to the question posed in a June 17, 2015 email from Beth Della Valle, Interim Community Development Director to Chris Halpin, President of Celtic Energy, Inc. "Are you prepared to walk the TOWN (the Energy Committee, the Public Works Director, Town Manager, and other Department Heads, and the Board of Selectmen) through the options of an ESPC and other approaches to select the best financing, management, procurement, and networking options to establish a LED street light system in York and would you, please, provide a general sense of how you would propose to do that?"

"The short answer is yes, an explanation of ESPCs and other options is integral to our service as the third party consultant. We can provide an introductory briefing and briefing material to explain performance contracting and other approaches and an overview of the TOWN's options,

Back to Agenda

this could be a good first step in the project. A good approach would be to conduct a 90 minute to 2 hour kick-off meeting with as many of the key TOWN decision makers as possible, starting with a presentation by us about the pros and cons of different procurement models for a street light retrofit project and case studies of similar projects, plus ample time for Q&A and discussion. Also, an ongoing aspect of the project development process will be to continue to educate and advise the TOWN decision makers as options clarify. In some cases municipal staff or committees prefer to first define the project structure into a smaller set of options to be presented to Board of Selectmen. In general we prefer to consolidate the audience(s) as much as possible for presentations in person, although we understand it might be difficult to get everyone together at the same time or even the same day. Recording an initial presentation can be useful for those who are unable to attend, with supporting documentation such as Powerpoint presentations and case studies.

As noted in our RFP response, a few years ago the CONTRACTOR was hired by Connecticut's two main electric utilities to develop a Best Practices Guide for Energy Savings Performance Contracting. This does not focus on street light projects but it has a lot of relevant overview information on performance contracting conceptual structure, project development process, financing options, the role of the third party consultant, measurement & verification of savings, etc. The free PDF can be found at:

http://www.celticenergy.com/assets/files/CT_ESPC_Best_Practices.pdf"

PROJECT MANAGEMENT

The following personnel from the CONTRACTOR will perform the primary activities associated with this project. Their resumes and credentials are listed in Addendum 2.

Principal in Charge:
Chris Halpin, PE, CEM, CMVP, LEED™AP
President (10% of time)

Project Manager/CEI Principal:
Jim Pagliaro, CEM, CMVP, LEED AP
(40% of time)

Chris Lotspeich, CEM Pending, MPPM, MES (20% of time)
Daniel Clements, PE, CEM, REP, LEED™AP (30% of time)

Marketing/Contact Person:
Walt Donzila, C.E.M., C.P.C.
Director of Business Development
860-882-1515
walt@celticenergy.com

Project Team Members:
The mailing address for Celtic team members is:
Celtic Energy, Inc.
701 Hebron Ave.
Glastonbury CT 06033

Subcontractors: The CONTRACTOR does not anticipate the need for any subcontractors at this time since much of the local work will be conducted by the selected vendor(s).

Back to Agenda

REQUEST FOR ACTION BY BOARD OF SELECTMEN

DATE SUBMITTED: September 22, 2016	☒ ACTION
DATE ACTION REQUESTED: October 3, 2016	☐ DISCUSSION ONLY
SUBJECT: Tax Task Force	

DISCUSSION OF OPTIONS AVAILABLE TO THE BOARD: The Tax Task Force is meeting with the Board of Selectmen on October 3rd to discuss their charge. Harry Kluger has provided a write-up of the TTF's suggestion for a revised committee charge. I have attached copies of this, as well as the original charge of September 2004 and the revised charge of September 2005.

As to options, the Board can leave the current charge unchanged, it can alter the charge as Harry has suggested (or in any other way), or can disband the TTF.

The one point I will make is that I don't find value in the TTF recommending a cap of any sort. I think this is my job, as I explained at the meeting of September 12, 2016. Frankly, if the recommended number will continue to be ignored then I don't see any value in having this as part of a committee's charge.

RECOMMENDATION: I offer no recommendation beyond removal of the stated "primary goal... to recommend an annual rate of change to York's real estate taxes..."

PROPOSED MOTION: This is the Board's call.

Prepared by Stephen H. Burns, Town Manager: _____

Back to Agenda

Stephen H. Burns

From: Stephen H. Burns
Sent: Thursday, September 22, 2016 3:53 PM
To: 'harrykluger@mindspring.com'
Cc: Melissa M. Avery
Subject: TTF and BOS

Hi Harry,

Just a reminder that I'm adding the TTF to the October 3rd BOS meeting, from 6:30 to 7:00 PM. I will include with the Board's meeting packet the proposed duties write-up which you provided earlier this summer following the July BOS meeting. I'll also include the existing information about the current duties, and any other relevant information.

So you know, I've already suggested that it is my place to recommend a limit, and I reviewed that with them on September 12th. My thinking is to start with the tax rate and back into a net spending goal, as I presented to them. However, if the Board wants the TTF to continue to set an annual goal that's fine, too.

If there's anything else you want included in the packet please get it to Missy by noon next Wednesday. She is the one putting together the meeting packet.

Thanks!

Steve

Stephen H. Burns, Town Manager
York Town Hall, 186 York St., York ME 03909
(207) 363-1000
sburns@yorkmaine.org

Back to Agenda

Preliminary Response to the Board of Selectmen's Request of 7/18/16 for a Description of the Duties of the Tax Task Force

---

As requested by the Board of Selectmen at your July 18, 2016 meeting, I am forwarding the following document for your review. This memo presents the Tax Task Force's charge as understood by the committee. Please let the committee know whether this is agreeable to the Board of Selectmen or whether changes should be made to this description.

Respectfully submitted,
Harry Kluger
Chairman, Task Tax Force

The Tax Task Force Committee was created by the York Board of Selectmen, initially charged on September 14, 2004 and updated on September 12, 2005. It has been operating under the latter charge from Dave Marshall, representing the Board of Selectmen. Under this charge, "The TTF should provide a forum where the citizens of York, the BOS, the School Board and the Budget Committee can receive an unbiased assessment of a spending proposal's individual and aggregate impact on the taxpayer." Additionally, "you frame the committee's input using a citizen's perspective . . . In essence your committee is a conduit for the concerns of the taxpaying citizens of York, as well as a synthesizer of their views on the impact of existing and proposed real estate taxes on them." There is no question that this is a substantial charge and one which is still valid. The reason for re-visiting the duties of the TTF is that some of the specific tasks that were envisioned to be associated with Marshall's charge are outdated and/or no longer applicable.

What follows is the TTF's vision of what it can and should be attempting to do to serve the citizens of York. The Committee also is recommending a change in its name. The name "Tax Task Force Committee" is not a very good description of the Committee's duties. It is suggested that the name of the Committee be changed to the Tax Impact Study Committee (TISC)

1/ The Tax Impact Study Committee (TISC) should continue to act as a voice of the citizens of York by communicating the impact of the changes in the town and school budgets as represented by the measures that are voted on in the town's ballot. To do this, the TISC analyzes the impact of those ballot measures on the taxpayers. This analysis is done by comparing the requested changes to various financial statistics such as the Consumer Price Index, other applicable cost of living figures, and comparisons with neighboring towns. The goal is to decide whether potential changes are reasonable and sustainable for the long-term.

2/ In assessing the potential real estate tax increases, the TISC will be mindful of the effect on the town's elderly and those living on fixed incomes.

Back to Agenda

3/ The TISC will provide a variety of forums including public presentations.

4/ The TISC will communicate with other, similar towns in our general geographic area to identify mechanisms that may lessen the taxpayer impact for seniors and/or fixed income families.

The TISC will hold its meetings on the first Wednesday of each month. The primary goal of the TISC will be to recommend an annual rate of change in York's real estate taxes by September of each year.

The Committee members would like to have, as the Marshall letter mentions, a member of the Board of Selectmen assigned as liaison to our group, and we would like to report our findings quarterly to the Board of Selectmen.

The TISC is an advocate for all taxpayers of York, establishing guidelines that reflect fiscal responsibility and giving voice to those who are affected by the town's budget. We are not an enforcement body. We serve in an advisory and educational capacity only.

Back to Agenda

FOR BUDGET COMMITTEE DISCUSSION

Amended 10/12/c

TOWN OF YORK
Tax Task Force Committee
Established September 14, 2004

PURPOSE:

The purpose of the Tax Task Force Committee is to advise the Board of Selectmen on all issues related to taxation, including assessment, budgeting, spending, revenue enhancement and tax relief for citizens with special needs. The Committees role is advisory to the Board of Selectmen. They shall have the following responsibilities:

1. To inform the taxpayers how assessments are determined and what the duties of the Towns Assessor encompass. To review and finalize the information booklet with the Assessor.

2. To investigate and recommend procedures for re-assessment used by the State of Maine as follows:

   a. Limit use of prior year sales to 12 months, 15 months for special circumstances;
   b. Eliminate the top and bottom 15% of sales

3. To allow for the research and implementation of new assessment policies and/or procedures as allowed under the State Statutes with approval of the Board of Selectmen.

4. To allow for town-wide inflation in making assessments as determined to be legal.

5. To calculate the value of buildings more precisely, to review valuation of commercial land on par with residential

6. To adjust properties annually to correct egregious assessments.

7. To replace the procedure presently being used for annual re-assessment.

COMMITTEE COMPOSITION:

The Committee will be appointed by the Board of Selectmen and will have the following composition:

1. Five to Nine members of the General Public.
2. ~~Appointments are to be 3 year terms, staggered.~~
3. The Committee to include the Assessor as a non-voting staff member.
4. A majority vote would be a quorum of those appointed members.

Back to Agenda

CHAIR & VICE-CHAIR:

The Chair shall be a voting member of the Committee and shall be chosen by majority vote. The Chair will be responsible for the orderly conduct of Committee meetings. A Vice-Chair shall also be chosen by majority vote and shall be a voting member of the Committee. The Vice-Chair shall be responsible to perform the duties of the Chair in the absence of the Chair.

MEETINGS AND TIME TABLE:

The Committee shall determine meeting times and dates. All meetings shall be held in public and properly noticed. In the event the Committee must enter into Executive Session, the Committee shall comply with MRSA Title 1, Section 405 of State Law. The Committee shall use the privilege of executive sessions only when absolutely necessary to protect the interests of the Town or property owners.

Back to Agenda

Town of York

186 York Street
York, Maine 03909-1314

Town Manager/ Selectmen (207)363-1000

Town Clerk/ Tax Collector (207)363-1003

Finance/ Treasurer (207)363-1004

Code Enforcement (207)363-1002

Planning (207)363-1007

Assessor (207)363-1005

Police Department (207)363-1031

Dispatch (207)363-2557

York Beach Fire Department (207)363-1014

York Village Fire Department (207)363-1015

Public Works/ Harbor Master (207)363-1010

Senior Center/ General Assistance (207)363-1036

Parks and Recreation (207)363-1040

Grant House (207)351-1204

Fax (207)363-1009 (207)363-1019

www.yorkmaine.org

12 September, 2005

Mr. Thomas Carnicelli, Chair
Tax Task Force Committee
PO Box 1228
York Harbor, Maine 03911

Dear Mr. Carnicelli:

Thank you for your letter of 22 June. The Board of Selectmen (BOS) desires that the important work the Tax Task Force (TTF) started well over a year ago continue. Your committee has a unique role to perform; the board sees you as York's general taxpayer advocate.

The activities of the TTF should provide a forum where the citizens of York, the BOS, the School Board and the Budget Committee can receive an unbiased assessment of a spending proposal's individual and aggregate impact on the taxpayer. Additionally, as Town policies and practices evolve you also serve as an effective means to analyze and discuss taxpayer impact. You frame the committee's input using a citizens' perspective, those actually funding the majority of our Municipal and School spending proposals. In essence your committee is a conduit for the concerns of the tax paying citizens of York, as well as a synthesizer of their views on the impact of existing and proposed real estate taxes on them.

Looking back, the taxpayer impact target formula your committee recommended provided an important "reasonableness" benchmark to measure the Town and School System FY2006 proposed spending. We thank you for that effort.

This FY 2007 year the BOS will:

- Share our budgetary perspective with the Town Manager. We plan an open dialogue and will hold Selectmen Workshops to this end. Fostering a consensus approach with the Town Manager on aggregate municipal spending direction and growth is a priority. Our goal is to enhance support for the Town's Budget that will result in broad based voter acceptance.
- As a guide we plan to frame our budgetary discussions using your committee's taxpayer impact target formula adapted to relevant FY2007 factors (i.e., aggregate % Property Evaluation increase, the appropriate cost of living index).
- Consult with your committee and welcome your taxpayer impact insight on proposed spending.

Back to Agenda

- Insure your committee is adequately represented in the annual Capital Planning process and given the opportunity to publicly express your view on proposed spending taxpayer impact, both in the near term and longer term.
- Urge you to re-examine the basis for the committee's taxpayer impact formula and to make timely recommendations for change.
- Assign a Selectman as liaison to your committee.

In addition over the next twelve months we request that you undertake the following:

- Evaluate the impact of the existing Growth Ordinance from the taxpayer's perspective and to recommend changes as appropriate.
- Explore and suggest additional sources of revenue to fund necessary municipal spending using the concept of service costs being borne appropriately by those who cause the costs to be incurred. This can include but is not limited to the existing Town fee structure.
- Work closely with the Town's Assessor in a cooperative manner to insure that York's assessment process is open, fair and understandable by the citizenry. Insure that the BOS is appraised of any changes to this process your committee recommends.
- Examine additional steps (beyond the "circuit breaker" program) that may aid elderly York residents afford the Town's property tax burden.
- Keep attuned to relevant tax policies and procedures of other Maine municipalities and recommend to the BOS those you believe can serve as a model for our adoption or emulation.
- Keep appraised of developments at the Town of York Budget Committee meetings, as well as that of York County during the budget formulation period.
- At least quarterly, report your activities to the BOS, preferably in person, to permit an adequate consultation and dialogue. The presence of your committee is always welcome at any Board of Selectmen Meeting.

The Board of Selectmen thanks you for your past service and look forward to working with you for the benefit of the citizens of York.

David Marshall, Chair
York Board of Selectmen

cc:
School Board
Budget Committee

Back to Agenda

REQUEST FOR ACTION BY BOARD OF SELECTMEN

DATE SUBMITTED: September 28, 2016	☒ ACTION
DATE ACTION REQUESTED: October 3, 2016	☐ DISCUSSION ONLY
SUBJECT: Adoption of resolution endorsing the 2015 York County Hazard Mitigation Plan for Town of York	

DISCUSSION OF OPTIONS AVAILABLE TO THE BOARD: The County's hazard mitigation plan is mandated by the Federal Emergency Management Agency and is updated every five (5) years. The Board last approved plan in 2012. (see attached plan and information)

RECOMMENDATION: For the Board of Selectmen to approve and sign the resolution of adoption statement for the Town of York endorsing the 2015 York County Hazard Mitigation Plan.

PROPOSED MOTION: I move to approve the resolution adopting the 2015 York County Hazard Mitigation Plan for the Town of York.n/a

FISCAL IMPACT: n/a

DEPARTMENT LINE ITEM ACCOUNT: n/a

BALANCE IN LINE ITEM IF APPROVED: na

PREPARED BY: Chief Douglas P. Bracy / REVIEWED BY: _____

Back to Agenda

TOWN OF YORK, MAINE
Police Department

Douglas P. Bracy
Chief of Police

Mailing Address:
36 Main Street
York, Maine 03909

Dispatch:
Non-Emergency
(207) 363-4444

Administration:
(207) 363-1031

Facsimile:
(207) 361-6818

www.yorkpolice.org

Committed to excellence

Memorandum

To: Town Manager Stephen Burns
Cc: Board of Selectmen
From: Chief Douglas P. Bracy DPB
Date: September 28, 2016
Re: Adoption of York County Hazard Mitigation Plan

In an effort to ensure we are compliant with the Hazard Mitigation Planning process set forth by Federal Emergency Management Agency, the Town of York participates in a joint countywide hazard mitigation plan. The York County Emergency Management Agency is responsible for compiling this hazard mitigation plan with input from each municipality within the County. This hazard mitigation process started in the 2004 and is updated every five years. Once compiled the plan is submitted to the Maine Emergency Management Agency for approval and then to FEMA Region 1 for initial approval. Each revision of the plan must be adopted by the governing bodies of the participating municipalities. Final approval is received from FEMA once the plan has been adopted by all of the participating communities.

I have provided a copy of this plan in your package along with the formal adoption signature page for the Board's approval and signing. This approval process is required for the Town to stay in compliance with FEMA regulations and the Community Rating System standards for certification.

Back to Agenda

YORK COUNTY

HAZARD MITIGATION PLAN

RESOLUTION OF ADOPTION

Whereas, natural and man-made disasters may occur at any time, we recognize that to lessen the impacts of these disasters we will save resources, property and lives in York County;

And whereas the creation of a Hazard Mitigation Plan is necessary for the development of a risk assessment and effective mitigation strategy;

And whereas, the 26 towns and 3 cities of York County are committed to the mitigation goals and measures as presented in this plan;

Therefore, **the Town of York** hereby adopts the 2015 York County Hazard Mitigation Plan.

AUTHORIZING SIGNATURES

Selectman	Date
Selectman	Date
Selectman	Date
Selectman	Date
Selectman	Date

Back to Agenda

York County, Maine
Hazard Mitigation Plan

2015

Prepared by:

York County Emergency
Management Agency

Back to Agenda

York County Hazard Mitigation Plan 2015

Index

1.	**OVERVIEW**	**1 - 1**
	A. Background	1 - 1
	B. Major Features of York County	1 - 1
	Map 1 – Major Thoroughfares	1 - 4
	Map 2 – SMEDD 2015 Regional Needs Assessment Corridor Identification	1 - 5
	C. Demographics	1 - 7
	Map 3 – York County Maine	1 - 10
2.	**PREREQUISITES**	**2 – 1**
	Multi-Jurisdictional Participation	2 – 1
3.	**PLANNING PROCESS**	**3 – 1**
	A. Documentation of Multi-Jurisdictional Participation Planning Process	3 – 1
	B. Status of Multi-Jurisdictional Participation	3 – 2
	A. How plan was prepared	3 – 3
	B. People who were involved in the Planning Process	3 – 8
	C. How the Public was given an opportunity to be heard	3 – 9
	D. Opportunities for Additional Comments	3 – 9
	E. Review and Incorporation of Existing Plans and Studies	3 –9
	F. How the Planning Team Reviewed and Analyzed each Section of Plan and Whether Each Section was Revised	3 – 10

Back to Agenda

4. RISK ASSESSMENT **4 – 1**

1. Description of Natural Hazards Affecting the Jurisdiction 4 – 1
2. Profiling Hazards 4 – 6

Hazard #1 – Flood **4 – 6**

1. General Definition 4 – 6
2. Types 4 – 6
3. Location of Hazard 4 – 8
4. Extent of Hazard 4 – 9
5. Previous Occurrences 4 – 12
6. Probability of Future Occurrences 4 – 16

Map – Flood Data for York County 4 – 18

Hazard #2 – Severe Winter Storm **4 – 19**

1. General Definition 4 – 19
2. Types 4 – 19
3. Location of Hazard 4 – 19
4. Extent of Hazard 4 – 21
5. Probability of Future Occurrences 4 – 21

Hazard #3 – Severe Summer Storm **4 – 22**

1. Definition 4 – 22
2. Types 4 – 22
3. Location 4 – 23
4. Extent (Magnitude of Severity) 4 – 24
5. Probability of Future Occurrences 4 – 29

Hazard #4 – Wildfire (Urban Interface and Wildfire) **4 – 29**

1. Definition 4 – 29
2. Location 4 – 29
3. Extent (Magnitude of Severity) 4 – 30

Back to Agenda

4. Probability of Future Occurrences 4 – 32

3. Assessing Vulnerability - Overview 4 – 32

Vulnerability of York County to each hazard 4 – 33

Impacts of each hazard on York County 4 – 33

Repetitive Loss Properties 4 – 35

Identifying Structures 4 – 36

A. Vulnerability of Existing Buildings, Infrastructure, and Critical Facilities 4 – 36

B. Vulnerability of future buildings, infrastructure, and Critical facilities 4 – 38

Estimating Potential Losses 4 – 41

Analyzing Development Trends 4 – 49

4. Multi-Jurisdictional Risk Assessment 4 – 51

5. MITIGATION STRATEGY 5 – 1

A. General Goals of the Plan 5 – 2

B. Mitigation Actions By Goal and Objective 5 – 3

Table 1 –

Goal 1: Minimize Damage, Injury & Loss of Life 5 – 5

Goal 2: Protect Economic Vitality of Businesses 5 – 6

Goal 3: Ensure Continuity of County & Local Government Operations 5 – 7

Goal 4: Make Efficient Use of Public Funds for Mitigation 5 – 8

Goal 5: Raise Public Awareness of and Support for Mitigation 5 – 9

Prioritized Local Mitigation Projects in York County 5 – 17

All Municipalities within York County participate in NFIP. 5 – 32

Table CID # and Program Dates 5 – 32

Back to Agenda

6. PLAN MAINTENANCE PROCEDURES 6 – 1

A. Monitoring the Plan 6 – 1

B. Evaluating the Plan 6 – 1

C. Updating the Plan 6 – 1

A. Identification of Local Planning Mechanisms 6 – 2

B. Process for Incorporating Mitigation Strategies and Related Information into Local Planning Mechanisms 6 – 3

C. Explanation of How Local Governments Incorporated Strategies and Other Information 6 – 3

D. Continued Public Involvement 6 – 4

A. Public participation 6 – 4

APPENDIX A – PUBLIC PARTICIPATION DOCUMENTATION

Back to Agenda

1. OVERVIEW

A. BACKGROUND

In 2004 the York County Emergency Management Agency (YCEMA) prepared a multi-jurisdictional hazard mitigation plan, in accordance with the Federal Disaster Mitigation Act of 2000. This plan was updated in 2010 and again in 2015. The 2015 update to the 2010 plan fulfills the Federal Emergency Management Agency (FEMA) requirement that local hazard mitigation plans be updated every five years.

Pursuant to §201.6 of the Interim Final Rule prepared by FEMA, York County, Maine, chose to do a multi-jurisdictional hazard mitigation plan for the county and its municipalities. The primary reasons for conducting this as a countywide plan were that the county possesses greater hazard mitigation resources than do many of its municipalities and that the hazards faced by its municipalities are similar.

The YCEMA was the lead agency for the 2015 plan update. YCEMA serves as the central coordinating agency for the 29 local EMAs in York County, and contributed considerable informational and professional resources to this plan update. YCEMA worked in conjunction with Southern Maine Planning & Development Commission (SMPDC) and the council of governments that serves all of York County. SMPDC assisted with data collection and documentation under the guidance of YCEMA.

In accordance with the state home rule laws, each of the 29 municipalities in the county has jurisdiction over all land use and planning regulations. Therefore, the 2015 plan update was written with local interests in mind and with participation and input from the local emergency directors and other officials. It is being presented to the legislative bodies of all 29 cities and towns for adoption.

The York County Hazard Mitigation Plan Update contains six sections:

1. Overview of Jurisdiction
2. Prerequisites for FEMA Review
3. Planning Process
4. Risk Assessment
5. Mitigation Strategies
6. Plan Maintenance Procedures

B. MAJOR FEATURES OF YORK COUNTY

Topography:
The County's topography, major physical features and soils were largely shaped by glaciers that receded from the area some 14,000 years ago. They created the County's hills, valleys, flatlands,

Back to Agenda

rivers, lakes, streams, and wetlands, and helped to shape variations in soil types, vegetative cover, groundwater characteristics, and the general suitability of areas for development and other land uses.

The entire east side of York County is bordered by the Atlantic Ocean. The ~~S~~southern Maine coastline is famous for its ruggedness, sandy beaches, and scenic views resulting from many bays, harbors, promontories and rocky islands.

In the northern part the hills are numerous, several of which are near 1,000 feet in height. At around 600 feet high, Mount Agamenticus, which is located in the town of York, is the highest elevation near the coast. The rocks of the region are chiefly granitic with some argillaceous points near the coast. The soil of the southern and eastern parts of the county inclines to sandy loam, though clay and clayey and gravelly loam are frequent.

Major Water Bodies:
According to the U.S. Census Bureau, the county has a total area of 1,270 square miles, of which 991 square miles (78%) of it is land and 279 square miles (22%) of it is water.

The Saco River passes through the eastern section, and then forms its boundary line for some fifteen miles on the northeast. The Ossipee River continues this line ten miles or more further to the New Hampshire line. The Salmon Falls River forms the western boundary line for about thirty miles, and the Piscataqua River continues it some ten miles further to the sea. The other considerable rivers are the Little Ossipee, Mousam, Kennebunk, Great Works, Little and York. In the northern part there are numerous ponds, The Little Ossipee, located somewhat north of the center of the county in Waterboro is the largest, except for Great East Pond, which is partly in New Hampshire.

Major Transportation Thoroughfares:
Below is a list of the major transportation highways in York County, and shown on Maps 1 and 2:

A) Southern Coast Corridors
- Portsmouth, NH/Kittery to Portland
  (US 1, I-95, Eastern Trail, Guilford Rail Line/Amtrak)

B) Coastal PACTS Corridors
- Portland to Brunswick
  (US 1, I-95, I-295, Rail)

C) Cumberland County Central Corridors
- Portland to Lewiston
  (I-95, Route 26, Route 100)

D) York County Central Corridors
- Northern York County to KACTS via Sanford
  (Route 5, Route 202/4, Route 4, Route 236,

Back to Agenda

Route 11, Route 11A)

E) Portland West/Lakes Region Corridors
- Portland to Fryeburg
  (US 302, Route 113, Route 114, Route 25)
- Mountain Division Rail with Trail

F) York County East-West Corridors
- Northern York County to Southern PACTS Area
  (Route 22, Route 202, Route 4A, Route 5, Route 117, Route 112)
- NH to I-95 and Coastal Towns via Sanford
  (US 202, Route 111, Route 99, Route 109)
- Somersworth, NH/Berwick to Wells
  (Route 9, Guilford Rail Line/Amtrak)

The York County Community Action Corporation's Transportation offers a range of transportation options which are open to the general public and people of all ages. They offer transportation for shopping and non-emergency medical transport for any purpose including trips for cancer treatments as well as scheduled trips for work or training. They also offer contracted or special transportation for children case managed by the Department of Human Services or Child Development Services as well as medical (non-emergency) transports for citizens that cannot be served on public transportation. Some typical routes are Sanford to Wells and Sanford to Biddeford with destinations including Goodall Hospital, Southern Maine Medical Center, Biddeford Crossing Shopping Mall, and York County Community College. Summer trolley services are offered along York County's coastline.

Map 1 – York County Major Thoroughfares

Map 2 – Southern Maine Economic Development District (SMEDD) 2015 Regional Needs Assessment – Corridor Identification

Back to Agenda

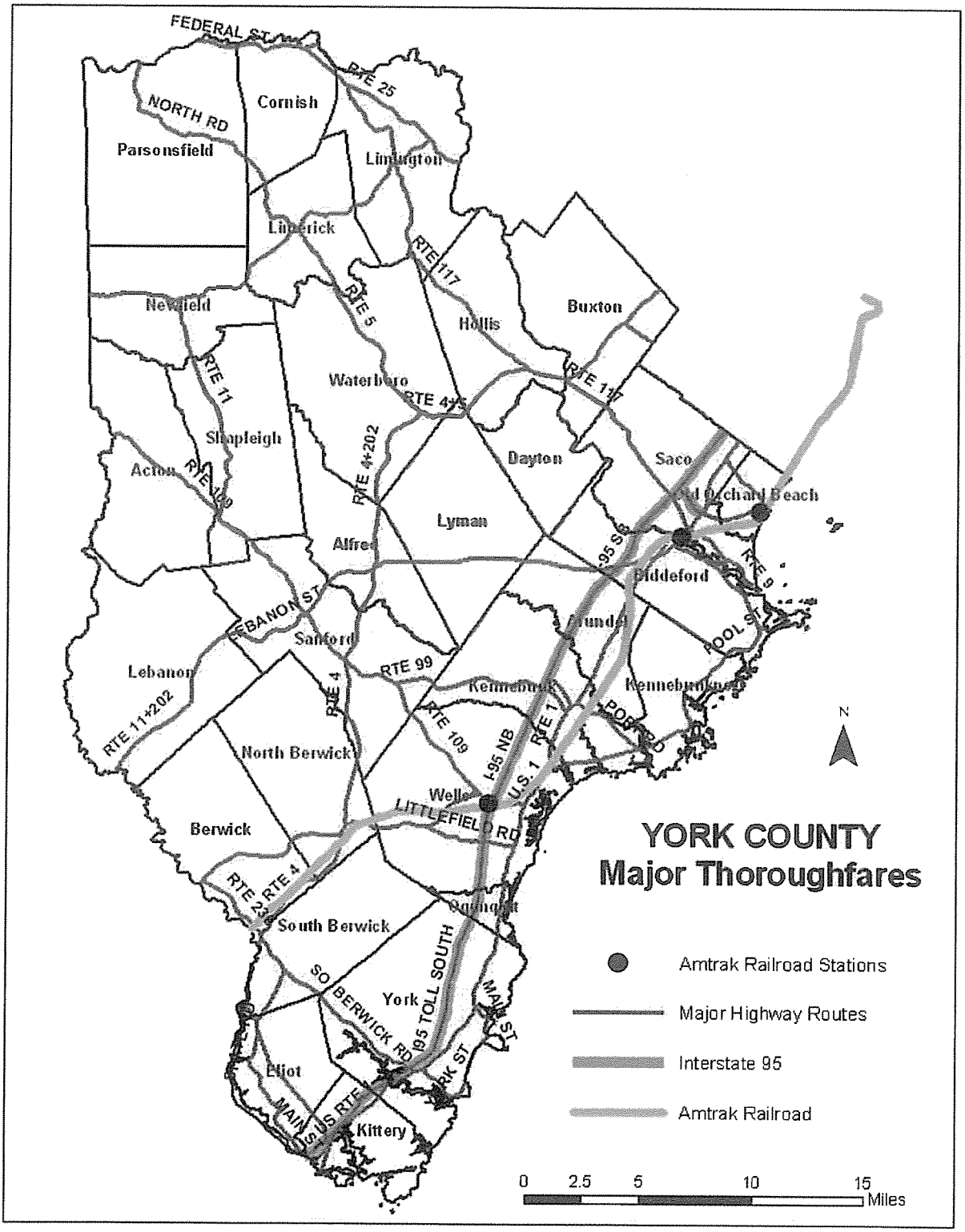

Map 1

Back to Agenda

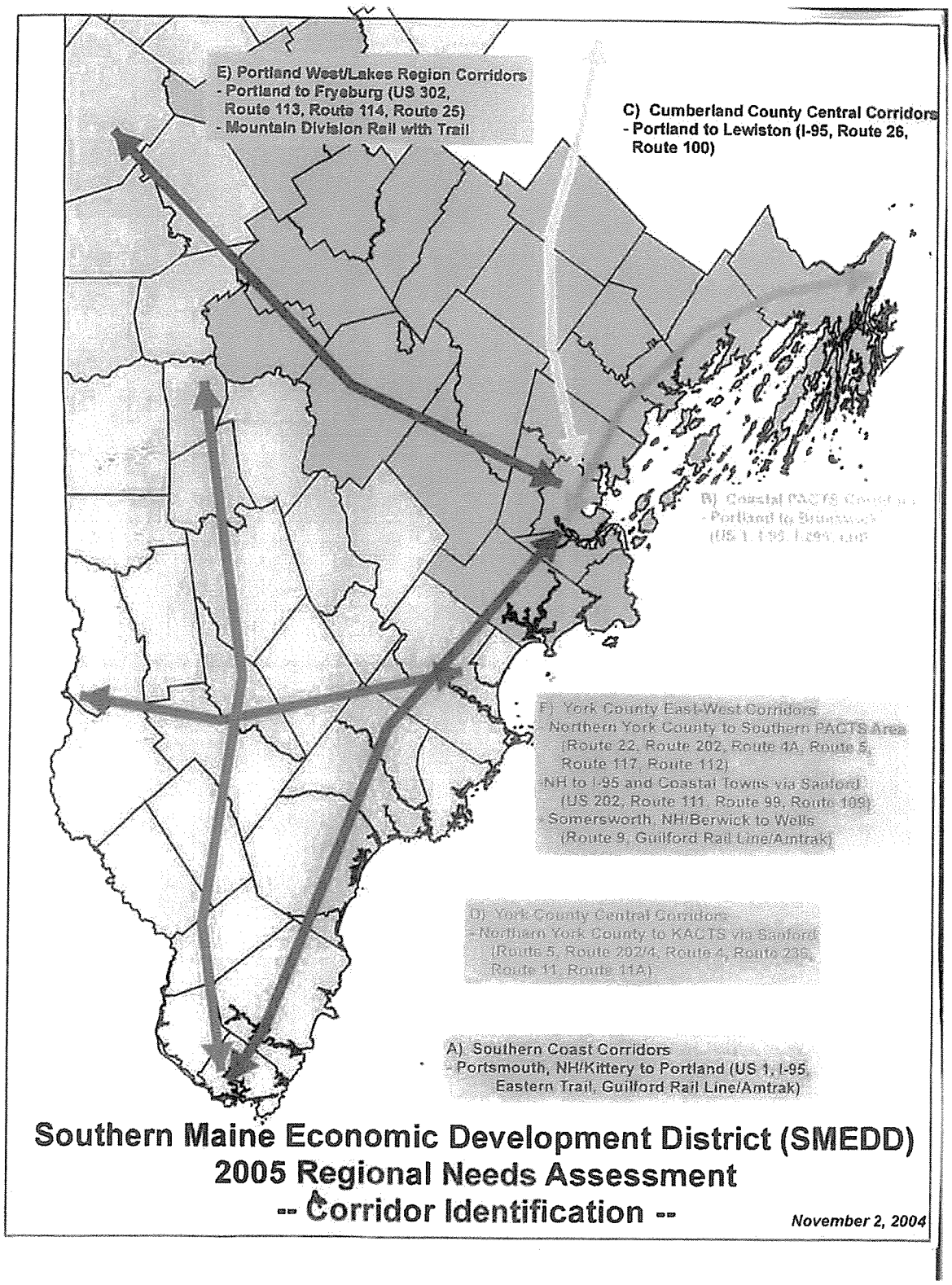

Map 2- REPLACED WITH
UPDATED MAP FOR 2015

Back to Agenda

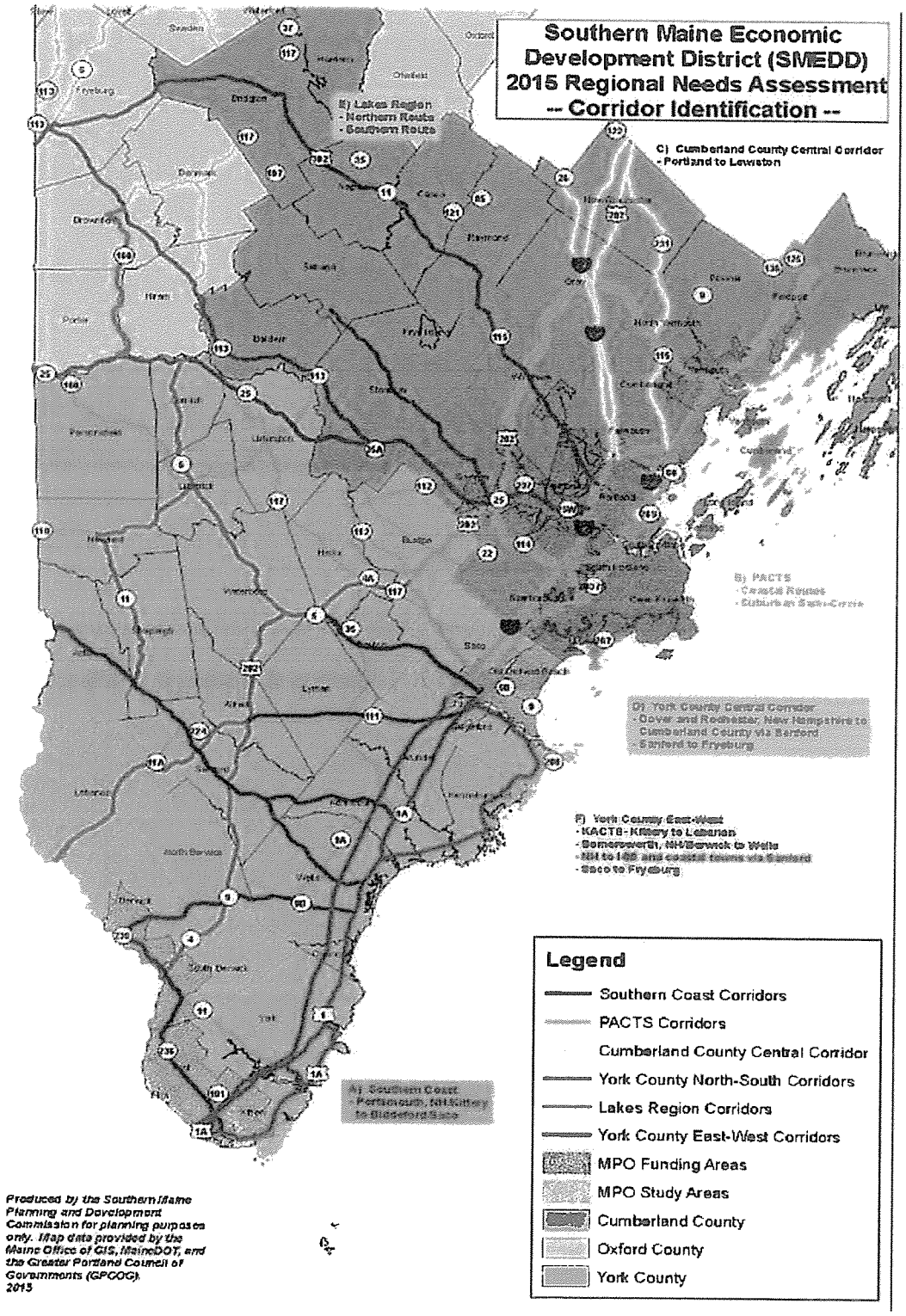

MAP 2

Back to Agenda

Major Employment Centers and Employers
York County is also a major employment center. Around 104,271 people are employed in the county, with the largest concentrations in Biddeford, Kennebunk, Kittery, Saco, Sanford and York. These six cities and towns together have 49,252 jobs or 47 percent of all jobs in the county. Banking, insurance, health services, manufacturing and marine-related industries are the major business sectors. There are five large employers (more than 500 employees) in York County, with many smaller companies located throughout the region. The only operations employing more than 500 people at a single location are:

- Portsmouth Naval Shipyard (Kittery): 1,000 or more employees
- Pratt & Whitney Aircraft Group (North Berwick): 1,000 or more employees
- University of New England (Biddeford): 500-999 employees
- Webber Hospital Association/Southern Maine Medical Center (Biddeford): 1,000 or more employees
- York Hospital (York): 1,000 or more employees

Climate and Geography
There are two different climates in York County. The northwest interior portion of the County is least affected by marine influences, and contains hilly and mountainous terrain. The southeast section of the County is most affected by the ocean but has minimal elevation changes and thus, minimal climatic impact from any topographic controls.

Precipitation and Temperature
The York County climate is influenced by the Atlantic Ocean. Average annual temperature is 54°F, with July normally the warmest (80.2 °F) and January the coldest (10.8°F,). Total annual precipitation averages 46.8 inches, with September typically the driest and November the wettest month. On average, there are 200 sunny days. The comfort index, which is based on humidity during the hot months, is a 52 out of 100 – higher is more comfortable. The United States average is 44 days. These statistics may vary between the inland and coastal sections of the County.

Prevailing Winds
Most of the County is under northwest to west-northwest winds throughout much of the year, and particularly during the winter. The formation of a sea breeze occurs especially when regional winds are weak during the summer months. The sea breeze produces cool, refreshing temperatures during the summer along the coast, while the inland remains hotter and humid.

Topographic Features
The Southern Maine Coast is famous for its ruggedness and scenic views resulting from the many inlets, bays, harbors, promontories and rocky islands found along its entire length. Summer tourists flock to York County for the beautiful sandy beaches that run along its eastern shores.
The landscape in general is a direct result of glacial erosion and deposition from the large ice sheets that completely covered Maine about 14,000 years ago. A variety of glacial deposits cover the County providing a rich variety in the landscape as well as abundant sand and gravel for construction materials. These glacial deposits and erosion are also responsible for the many large lakes and ponds throughout the County. Past glaciation combined with existing climatic conditions has produced extensive wetland areas that provide habitat for many ecosystems.

Back to Agenda

Sea Level Rise

Maine's coast has been and will continue to be profoundly affected by an increase in sea level. The Maine Geological Survey estimates that the ocean has risen about seven and a half (7.5) inches since 1900, and is currently rising at a rate of about 1/64 inch (4.3 mm) per year. The result has been increased flooding, erosion of coastal bluffs and landslides. The consensus of the scientific community, reflected in the Fourth Assessment Report of the Intergovernmental Panel on Climate Change (IPCC) is that sea level will continue to rise at an accelerating rate through the year 2100.

No one knows for sure how high the sea will rise or how quickly it will occur, but the IPCC has prepared a range of scenarios based on a scientific analysis of a number of variables including glacial ice melt, thermal expansion of water due to global warming, and the melting of ice caps in Greenland and Antarctica. Based on the IPCC's projections, for its studies the Maine Geological Survey (MGS) is using a conservative, mid-range estimate of two (2) additional feet of sea level rise by the year 2100.

Along the Maine Coast, a sea level rise of one (1) foot means that a storm that had a 1% chance of occurring in any one year (the 100-year storm) at the original elevation will have a 10% chance of occurring in any one year (the 10-year storm) at the new elevation. As a result, more homes, businesses, public infrastructure such as roads, and entire communities will be subject to more devastating coastal floods on a more frequent basis. Based on MGS' inventory of coastal bluffs between York and Machias, about half the Maine Coast consists of unstable coastal bluffs less than 20 feet in height. Bluffs of the soft Presumpscot Formation mud erode at 1.6 to 3.3 feet/year, while bluffs of till, a stiff, stoney sediment, erode at about half that rate. Without expensive remediation, rising sea levels will likely increase the rate of erosion and threaten additional bluffs that are currently stable. Unstable coastal bluffs in excess of 20 feet in height will likely be subject to landslides on a more frequent basis. As a result, more homes, businesses and public infrastructure will be threatened with catastrophic loss.

C. DEMOGRAPHICS

Located in the southwestern corner of Maine, York County is a large and diverse county. Its population of 198,934 is scattered throughout 29 jurisdictions: 26 towns and the cities of Biddeford, Saco and Sanford. This population level makes York County the second most populous in the state, trailing only neighboring Cumberland County.

The largest municipality in the county is the City of Biddeford, which has 21,303 residents according to 2010 Census data. The next largest municipalities are the City of Sanford with a population of 20,853, and the City of Saco with a population of 18,757. These three urban centers only account for just under 31 percent of the county's total population which illustrates how scattered the population is throughout York County.

In addition to the population base, York County also has a substantial population of seasonal residents and visitors who are drawn to the region's beaches, lakes and ponds in the summer months. Since many of the hazards faced by the county are at their highest risk levels in the

Back to Agenda

summer, the additional people in the county during those months raises the risk exposure. In all, it is estimated that, during the peak of the tourist season in July and August there are 138,517 additional people staying overnight in York County. Therefore, the total peak population of the county is around 337,443.

The total land area of York County is 990.8 square miles, with the individual municipalities ranging in size from 4.1 to 59 square miles. The county's overall population density is 200.8 people per square mile. The density of individual municipalities is widely varied as well. It ranges from as low as 32 people per square mile in the rural areas to as high as 1,160 people per square mile in the urban areas.

York County contains about 106,545 housing units with 20,162 or 18.92% being occupied seasonally. The remaining 86,383 units comprise the year-round housing stock of the county. The following table summarizes population, density and housing for each of the communities in York County.

County Profile			
Measure	York County 2010	Maine 2010	USA 2010
Population	198,934	1,328,361	308,745,538
Total Housing Units	106,545	721,830	131,704,730
Total Households	85,611	557,219	116,716,292
Average Household Size	2.40	2.32	2.58
Median Household Income	54,880	45,815	50,046
Persons below Poverty	18,727	167,242	46,215,956
% of population under 5	4.8%	5.2%	6.5%
% of population 18 and over	78.6%	79.4%	76.0%
% of population 65 and over	15.4%	15.9%	13.1%
Persons Per Square Mile	199	43.1	87.4

Back to Agenda

Municipal Population and Housing Data (2010 Census Estimates)

Municipality	Population 2010			Population Density			Housing Units 2010		
	Year Round*	Seasonal**	Peak	Land Area (Sq. Mi.)	Per Sq. Mile	Per Unit	Total	Year Round	Seasonal
Acton	2,497	5,097	7,594	37.8	66.1	2.18	2,174	1,144	1,055
Alfred	3,051	546	3,597	27.2	112.2	2.45	1,390	1,243	107
Arundel	4,100	774	4,874	23.9	171.5	2.51	1,691	1,635	57
Berwick	7,400	421	7,821	37.1	199.5	2.62	2,925	2,827	107
Biddeford	21,303	3,160	24,463	30.0	710.0	2.36	10,207	9,036	1,028
Buxton	8,079	344	8,423	40.5	199.5	2.54	3,533	3,175	126
Cornish	1,383	489	1,872	22.1	62.6	2.26	677	613	79
Dayton	1,989	0	1,989	17.9	111.1	2.74	756	727	26
Eliot	6,234	411	6,645	19.7	316.4	2.44	2,546	2,558	111
Hollis	4,343	186	4,529	32.0	135.7	2.53	1,835	1,716	85
Kennebunk	10,972	5,537	16,509	35.1	312.6	2.19	6,004	5,005	901
Kennebunkport	3,510	7,554	11,064	20.6	170.4	1.82	2,875	1,925	972
Kittery	9,573	1,570	11,143	17.8	537.8	2.08	5,144	4,607	335
Lebanon	6,077	6,835	12,912	54.7	111.1	2.67	2,521	2,273	267
Limerick	2,905	1,634	4,539	27.1	107.2	2.58	1,451	1,127	442
Limington	3,734	593	4,327	42.0	88.9	2.66	1,716	1,402	213
Lyman	4,356	2,336	6,692	38.9	112.0	2.61	2,060	1,668	399
Newfield	1,499	1,776	3,275	32.3	46.4	2.30	1,124	653	443
North Berwick	4,602	370	4,972	38.3	120.1	2.54	1,967	1,812	118
Ogunquit	1,141	9,327	10,468	4.1	278.3	2.03	1,944	563	1,446
Old Orchard Beach	8,679	31,275	39,954	7.4	1,172.8	1.75	7,029	4,958	1,928
Parsonsfield	1,746	1,724	3,470	59.0	29.6	2.17	1,198	804	370
Saco	18,757	4,088	22,845	38.5	487.2	2.38	8,640	7,865	643
Sanford	20,853	2,754	23,607	47.8	436.2	2.34	9,701	8,915	537
Shapleigh	2,676	4,014	6,690	38.7	69.1	2.36	2,052	1,135	901
South Berwick	7,276	131	7,407	32.2	226.0	2.58	2,856	2,822	89
Waterboro	7,747	3,501	11,248	55.5	139.6	2.62	3,410	2,957	617
Wells	9,783	23,380	33,163	57.7	169.5	2.10	8,290	4,651	3,906
York	12,661	18,690	31,351	54.9	230.6	2.18	8,829	5,795	2,854
County Total	**198,934**	**138,517**	**337,443**	**990.8**	**200.8**	**2.32**	**106,545**	**85,611**	**20,162**

* Year Round Population estimate produced by US Census Bureau

** Seasonal population estimates were last done by SMRPC in 1994. This report applies the same ratios to 200810 population.

*** Total and Year Round housing unit estimates produced by SMRPC for 2006.

Back to Agenda

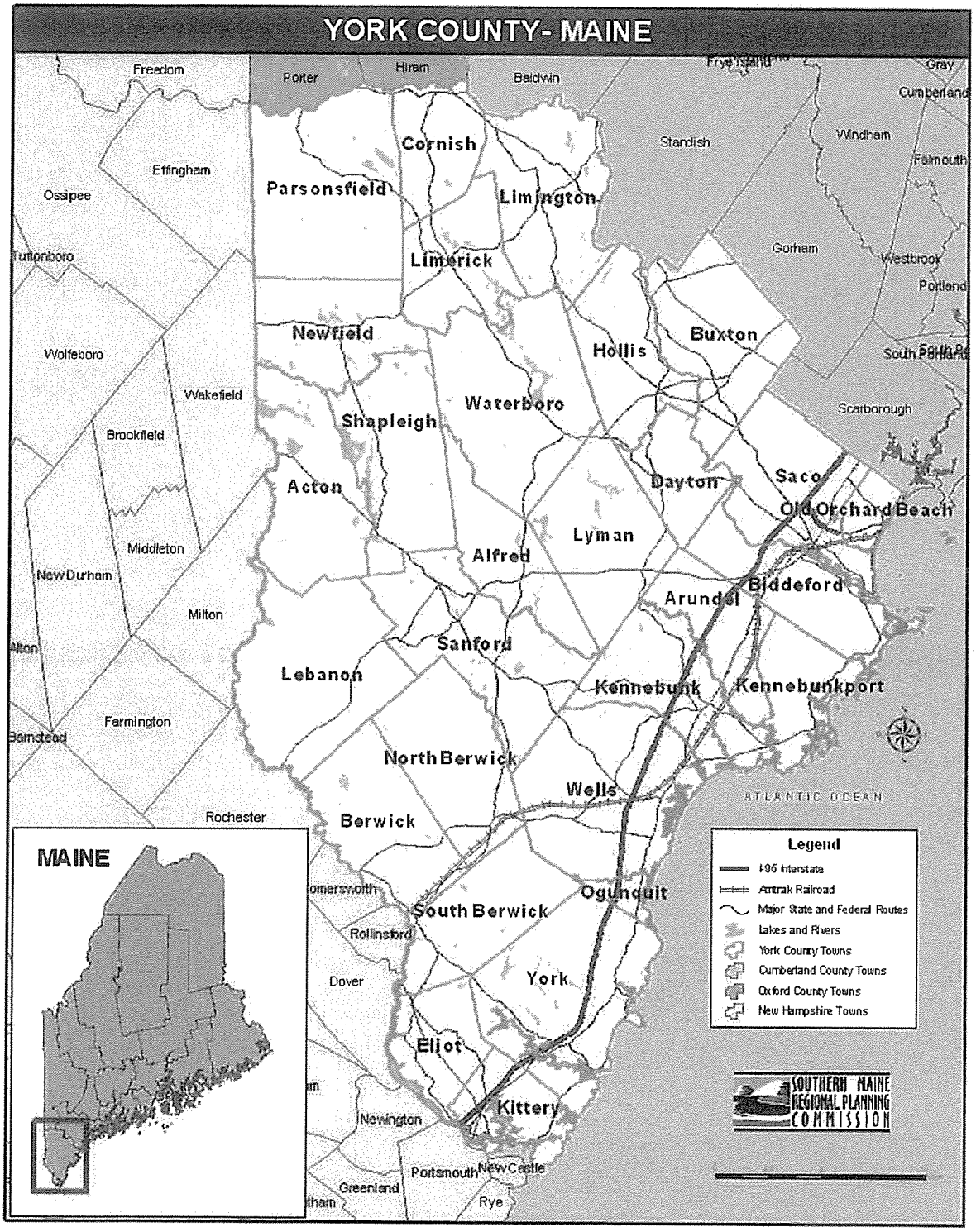

Map 3

Back to Agenda

2. PREREQUISITES

2. Multi-Jurisdictional Plan Adoption
Requirement §201.6(c)(5): For multi-jurisdictional plans, each jurisdiction requesting approval of the plan must document that it has been formally adopted.

This plan is a multi-jurisdiction plan. Municipalities that participated in the preparation of this plan include:

Acton, Town of
Alfred, Town of
Arundel, Town of
Berwick, Town of
Biddeford, City of
Buxton, Town of
Cornish, Town of
Dayton, Town of
Eliot, Town of
Hollis, Town of
Kennebunk, Town of
Kennebunkport, Town of
Kittery, Town of
Lebanon Town of
Limerick, Town of
Limington, Town of
Lyman, Town of
Newfield, Town of
North Berwick, Town of
Ogunquit, Town of
Old Orchard Beach, Town of
Parsonsfield, Town of
Saco, City of
Sanford, City of
Shapleigh, Town of
South Berwick, Town of
Waterboro, Town of
Wells, Town of
York, Town of

A copy of the resolution that will be adopted by each participating jurisdiction is shown on the next page. The York County Commissioners will adopt the resolution on behalf of the county.

Back to Agenda

YORK COUNTY

HAZARD MITIGATION PLAN

RESOLUTION OF ADOPTION

Whereas, natural and man-made disasters may occur at any time, we recognize that to lessen the impacts of these disasters we will save resources, property and lives in York County;

And whereas the creation of a Hazard Mitigation Plan is necessary for the development of a risk assessment and effective mitigation strategy;

And whereas, the 26 towns and 3 cities of York County are committed to the mitigation goals and measures as presented in this plan;

Therefore, the **York County Commissioners** hereby adopt the 2015 York County Hazard Mitigation Plan, and

AUTHORIZING SIGNATURES

York County Commissioner	Date
York County Commissioner	Date
York County Commissioner	Date
York County Commissioner	Date
York County Commissioner	Date

Back to Agenda

YORK COUNTY

HAZARD MITIGATION PLAN

RESOLUTION OF ADOPTION

Whereas, natural and man-made disasters may occur at any time, we recognize that to lessen the impacts of these disasters we will save resources, property and lives in York County;

And whereas the creation of a Hazard Mitigation Plan is necessary for the development of a risk assessment and effective mitigation strategy;

And whereas, the 26 towns and 3 cities of York County are committed to the mitigation goals and measures as presented in this plan;

Therefore, **the Town of York** hereby adopts the 2015 York County Hazard Mitigation Plan.

AUTHORIZING SIGNATURES

Selectman	Date
Selectman	Date
Selectman	Date
Selectman	Date
Selectman	Date

Back to Agenda

3. PLANNING PROCESS

3. Multi-Jurisdictional Planning Participation	
Requirement §201.6(a)(3): Multi-jurisdictional plans (e.g., watershed plans) may be accepted, as appropriate, as long as each jurisdiction has participated in the process…Statewide plans will not be accepted as multi-jurisdictional plans.	
Elements	**A.** Does the new or updated plan describe how each jurisdiction participated in the plan's development?
	B. Does the updated plan identify all participating jurisdictions, including new, continuing, and the jurisdictions that no longer participate in the plan?

DOCUMENTATION OF MULTI-JURISDICTIONAL PARTICIPATION PLANNING PROCESS

The table below shows the various opportunities for public participation in the drafting of the York County Hazard Mitigation Plan – Update 2015. Note that we considered "planning" to be broader than attending meetings or responding to emails. Also, under the "projects" column, the following abbreviations indicate who verified the information for the city/town: DPW (Director of Public Works), RC (Road Commissioner), LED (Local Emergency Director), BSC (Board of Selectmen/Council), TM (Town Manager) or FC (Fire Chief).

Municipality	Meetings	E-mail	Mailings	Projects
Acton, Town of	X	X	X	LED
Alfred, Town of		X	X	BS/C
Arundel, Town of	X	X	X	LED
Berwick, Town of	X	X	X	BS/C
Biddeford, City of		X	X	LED
Buxton, Town of	X	X	X	LED
Cornish, Town of		X	X	LED
Dayton, Town of	X	X	X	LED
Eliot, Town of	X	X	X	LED
Hollis, Town of		X	X	BS/C
Kennebunk, Town of	X	X	X	LED
Kennebunkport, Town of	X	X	X	LED
Kittery, Town of	X	X	X	LED
Lebanon, Town of		X	X	LED
Limerick, Town of	X	X	X	RC
Limington, Town of		X	X	BS/C
Lyman, Town of	X	X	X	LED
Newfield, Town of	X	X	X	BS/C
North Berwick, Town		X	X	TM
Ogunquit, Town of	X	X	X	LED
Old Orchard Beach, Town of	X	X	X	LED
Parsonsfield, Town of		X	X	LED
Saco, City of	X	X	X	DPW
Sanford, City of	X	X	X	LED

Back to Agenda

Shapleigh, Town of	X	X	X	LED
South Berwick, Town	X	X	X	LED
Waterboro, Town of	X	X	X	LED
Wells, Town of	X	X	X	TM
York, Town of	X	X	X	LED

B. STATUS OF MULTI-JURISDICTIONAL PARTICIPATION

Summary of Participating Municipalities		
Name of Municipality	**Participated in Prior Plan 2010**	**Participated in this Plan 2015**
Acton, Town of	X	X
Alfred, Town of	X	X
Arundel, Town of	X	X
Berwick, Town of	X	X
Biddeford, City of	X	X
Buxton, Town of	X	X
Cornish, Town of	X	X
Dayton, Town of	X	X
Eliot, Town of	X	X
Hollis, Town of	X	X
Kennebunk, Town of	X	X
Kennebunkport, Town of	X	X
Kittery, Town of	X	X
Lebanon, Town of	X	X
Limerick, Town of	X	X
Limington, Town of	X	X
Lyman, Town of	X	X
Newfield, Town of	X	X
North Berwick, Town of	X	X
Ogunquit, Town of	X	X
Old Orchard Beach, Town of	X	X
Parsonsfield, Town of	X	X
Saco, City of	X	X
Sanford, City of	X	X
Shapleigh, Town of	X	X
South Berwick, Town of	X	X
Waterboro, Town of	X	X
Wells, Town of	X	X
York, Town of	X	X

Back to Agenda

4. Documentation of the Planning Process	
Requirement §201.6(b): In order to develop a more comprehensive approach to reducing the effects of natural disasters, the planning process shall include: (1) An opportunity for the public to comment on the plan during the drafting stage and prior to plan approval; (2) An opportunity for neighboring communities, local and regional agencies involved in hazard mitigation activities, and agencies that have the authority to regulate development, as well as businesses, academia and other private and non-profit interests to be involved in the planning process; and (3) Review and incorporation, if appropriate, of existing plans, studies, reports, and technical information.	
Requirement §201.6(c)(1): (The plan shall document) the planning process used to develop the plan, including how it was prepared, who was involved in the process, and how the public was involved.	
Elements	**A.** Does the plan provide a narrative description of the process followed to prepare the new or updated plan?
	B. Does the new or updated plan indicate who was involved in the current planning process? (For example, who led the development at the staff level and were there any external contributors such as contractors? Who participated in the plan committee, provided information, reviewed drafts, etc).
	C. Does the new or updated plan indicate how the public was involved? (was the public provided an opportunity to comment on the plan during the drafting stage prior to the plan approval)?
	D. Does the new or updated plan discuss the opportunity for neighboring communities, agencies, businesses, academia, nonprofits and other interested parties to be involved in the process?
	E. Does the planning process describe the review and incorporation, if appropriate, of existing plans, studies, reports, and technical information?
	F. Does the updated plan document how the planning team reviewed and analyzed each section of the plan and whether each section was revised as part of the update process?

A. NARRATIVE DESCRIPTION

How plan was prepared

The York County Hazard Mitigation Plan is a multi-jurisdictional plan, completed under the direction of the York County Emergency Management Agency (YCEMA).

Beginning in July 2015, YCEMA began to update the plan. In September 2015, we held a Plan Update kick-off meeting at YCEMA for all local EMA Directors. In November 2015, January and March 2016, YCEMA held 4 Local Directors Meetings (see table below) at YCEMA which is centrally located in Alfred to kick-off the update process. YCEMA informed the municipalities and public about the need to update the plan and how eligibility for future mitigation grants is tied to having a FEMA-approved plan~~s~~. The meeting also included a summary of the update process, a poll regarding disasters and time allocated for an open discussion about hazard mitigation issues and concerns.

Back to Agenda

DOCUMENTATION OF LOCAL PARTICIPATION

09/09/15 – Initial meeting to kick-off Hazard Mitigation Plan Update – Local Directors Mtg
11/17/15 – Hazard Mitigation Plan Update – Local Directors Meeting
01/13/16 – Hazard Mitigation Plan Update – Local Directors Meeting
03/09/16 – Hazard Mitigation Plan Update – Local Directors Meeting
06/20/16 – Hazard Mitigation Plan Update – Public Review Meeting

Municipality	09/09/15 Kickoff Meeting	11/17/15 Public Meeting	01/13/16 Public Meeting	03/09/16 Public Meeting	6/20/16 Public Review Meeting	TOTAL
Acton, Town of		1	1	1		3
Alfred, Town of						0
Arundel, Town of		1			1	2
Berwick, Town of		1				1
Biddeford, City of					1	1
Buxton, Town of	2	1		1	1	5
Cornish, Town of						0
Dayton, Town of	1	1	1			3
Eliot, Town of			2	2		4
Hollis, Town of						0
Kennebunk, Town of	1	1		1	2	5
Kennebunkport, Town of			2	2	1	5
Kittery, Town of		1	1		2	4
Lebanon, Town of						0
Limerick, Town of	1	1		1		3
Limington, Town of						0
Lyman, Town of		2				2
Newfield, Town of	1	1	1	1		4
North Berwick, Town of	2					2
Ogunquit, Town of		1	1	1		3
Old Orchard Beach, Town of				1		1
Parsonsfield, Town of						0
Saco, City of		1				1
Sanford, City of	3	1		1		5
Shapleigh, Town of	1	1		2		4
South Berwick, Town of	2	1	1	1		5
Waterboro, Town of	1	1		1		3
Wells, Town of	1		2	2	3	8
York, Town of	1	1	2	1		5
TOTAL	**17**	**18**	**14**	**19**	**11**	**79**

A poll was conducted at the Local Directors meetings to gather input. Below is a list of the questions and a summary of the results:

Back to Agenda

1. Top three disasters that occur most often in your community							
Coastal Erosion	Coastal Storm	Dam Failure	Flood	Severe Winter Storm	Severe Summer Storm	Hurricane	Landslide
9	18	0	52	48	31	8	0

2. Top three disasters that are/would be the most problematic for your community							
Coastal Erosion	Coastal Storm	Dam Failure	Flood	Severe Winter Storm	Severe Summer Storm	Hurricane	Landslide
5	10	5	46	34	21	24	0

During the Local Directors meetings, the municipalities were polled to rate the hazards to be included in the plan. The hazard rating scoring system is shown below.

Task 1 – Natural Hazard Identification and Rating Survey

Purpose: The purpose of this survey is to determine the most frequently occurring natural hazards affecting your jurisdiction. Respondents were told to use the next five years as the time frame for estimating the likelihood of various hazards.

SEVERITY OF HAZARD RATING		
Rating Score	Summary Description	Impact
3	Severe	Multiple deaths, mass casualties, or millions of dollars in damages
2.5	High	Deaths or injuries; or $100,000 in damages
2	Moderate	Single death or several injuries; or $10,000 in damages
1.5	Low	Injuries; or $1,000s in damages
1	Slight	No deaths, single injury; or $100s in damages

LIKELIHOOD OF HAZARD RATING	
Rating	Description
A	Very likely
B	Possible
C	Very unlikely

POTENTIAL DISASTER TYPES			
Hazard Type	Description	Severity of Hazard	Likelihood of Hazard
Coastal Erosion	Wearing away of coastal soil by water, ice, or wind		
Coastal Storm	Violent weather (wind, rain)		
Earthquake	Event of 5.5 or more on Richter Scale		
Dam Failure	Loss of structural integrity of dams		

Back to Agenda

Flood	Overflow of water onto land areas		
Hurricane and tropical storm	Storm producing heavy rain and wind		
Landslide	Sliding down of a mass of earth, rocks, or buildings down a slope		
Severe Winter Storm	Violent weather (wind, ice, snow)		
Severe Summer Storm	Violent weather (wind, rain, hail, lightning)		
Tornado	Violent rotating column of air		
Urban fire	Burning of buildings		
Wildfire/forest fire	Burning of trees and underbrush		
Other			

The draft updates of the plan were completed by April 8, 2016 for additional review by each of the 29 municipalities in York County and the State. SMPDC will take comments/requested revisions and will complete a final version of the plan so it can be submitted to the FEMA Region I office in Boston for review. Once the plan is APA (approved pending adoption) it will be sent to the York County Commission and to each municipal legislative body for adoption.

B. PEOPLE WHO WERE INVOLVED IN THE PLANNING PROCESS

YCEMA was responsible for completing the plan, with the assistance from the Hazard Mitigation Planning Team, which consisted of representatives from state, county and municipal government. The Planning Team provided materials and information to SMPDC and participated in reviewing the plan.

York County Emergency Management Agency
Phone: 207-324-1578

Project Manager: Arthur W. Cleaves, Director

Other Contributing Staff: Laurie Ewing, Mitigation & Finance Manager
Dave Francoeur, Deputy Director
Blain Cote, Assistant Director
Megan Arsenault, Emergency Planning and Preparedness Manager

Southern Maine Planning & Development Commission
Phone: 207-571-7065

Project Manager: Tom Reinauer

Other Contributing Staff: Jamel Torres

Back to Agenda

In addition to these two agencies, inventory data was collected from a number of different state agencies. State agencies involved in the assembly of data for this plan included:

- Maine State Office of the Fire Marshal
- Maine Forest Service
- Maine Department of Transportation
- Maine Office of Geographic Information Systems
- Maine Emergency Management Agency

C. HOW THE PUBLIC WAS GIVEN AN OPPORTUNITY TO BE HEARD

As mentioned above, the planning team hosted four public meetings in September and November of 2015 and in January and March of 2016 to discuss the purpose of the hazard mitigation plan, present the plan inventory, and discuss potential goals and objectives of the plan with members of the public. A poll was conducted regarding disasters, their frequencies and potential impacts. The meetings concluded with an open discussion where the public was asked to share some of their answers with the group. These meetings were held at the York County EMA office at 149 Jordan Springs Road in Alfred, Maine. The office is geographically located in the center of the county. Advance notice and meeting reminders were sent advertising the four public local directors meetings on September 9th and November 17th of 2015 and January 13th and March 9th of 2016. Copies of the sign-in sheets are provided in Appendix A. to show documentation of public involvement in the planning process.

In addition to the meetings listed above, the York County EMA held a public meeting for review and comments regarding the 2016 updates to the Plan. The Plan, basic changes and the Municipal Project List were all reviewed. Advance notice, meeting reminders and a public notice were all posted to advertise this Public Review meeting. Again, copies of the public notice, Meeting Agenda and sign-in sheets are located in Appendix A.

Finally, regular updates on the plan's progress were presented at the monthly meetings of the York County EMA. The monthly meetings typically have representation from most, if not all, of the county's cities and towns. Representatives of each municipality who attend these meetings then report back to officials in their own municipalities.

D. OPPORTUNITIES FOR ADDITIONAL COMMENTS

Since this is a multi-jurisdictional plan, the meetings and polls offered a number of opportunities for neighboring jurisdictions, agencies, businesses, academia, nonprofits, and other interested parties to be involved in the planning process. Additional opportunities for public involvement were given in the form of the York County EMA website, and social media.

E. REVIEW AND INCORPORATION OF EXISTING PLANS AND STUDIES

The Planning Team reviewed the 2010 County Hazard Mitigation Plan, the latest version of the State Plan and other county and local plans and incorporated them as appropriate. The Risk Assessment portion of this plan provides a more detailed summary of plans, studies and other materials that were used to identify and document various hazards.

Back to Agenda

Summary of changes from the 2010 Hazard Mitigation Plan and the 2015 Revised Plan:

- Black text shows remaining/unchanged content
- Strike through represents deletion of content and
- Red shows new content.

F. HOW THE PLANNING TEAM REVIEWED AND ANALYZED EACH SECTION OF PLAN AND WHETHER EACH SECTION WAS REVISED

This reviewed plan was developed utilizing input from:

- The 2005 County Hazard Mitigation Plan
- The 2010 County Hazard Mitigation Plan
- 2013 State Hazard Mitigation Plan
- Disaster declarations since completion of the 2005 Plan
- Information from other plans and studies completed since the 2005 Plan.

Each section of the 2010 version of the York County Hazard Mitigation Plan was carefully reviewed to determine what specific information required updating. Each individual section was analyzed resulting in changes to the language, punctuation and formatting in order to clarify the information. All data, specifications, census information and past disaster history was updated to ensure that the plan is current and up to date. The following is a general summary of the major changes made to the plan:

*Chapter 1: Overview - The general plan background was updated with the current Planning Team as well as the process used to review and update the plan. New information regarding the York County Community Action program was added and a new map used for the Regional Needs Assessment Corridor Identification. The employment/employer information was updated with current top employers and their respective employment figures. All documentation regarding precipitation, temperatures, demographics and the County profile was updated with current figures and statistics.

*Chapter 2: Pre-Requisites - The summary sheet and each Resolution of Adoption for the individual cities and towns were updated with the current year and any appropriate language changes.

*Chapter 3: Planning Process - The narrative explaining the process as well as (3) three charts documenting the multi-jurisdictional and public participation in the planning process were all updated to reflect the 2015 changes. The results of current polls, the people involved and opportunities for public interaction were all updated and included.

*Chapter 4: Risk Assessment – The Planning Team reviewed the potential hazards listed and profiled as well as the disaster history for York County including location and extent of damages to determine the probability of future occurrences and the risks, danger and damages associated with each type of disaster. All language, data, and charts were updated to reflect

Back to Agenda

current information. New maps and a chart summarizing Repetitive Loss Properties were also added to this section. While reviewing and estimating potential losses, the critical resources currently available in York County that are required during an emergency were evaluated to determine any area of weakness or shortages. The County transportation network, infrastructure and utilities were also reviewed and updated with current data. The overall process assisted in determining which areas within the County are priorities in regard to establishing future mitigation procedures and projects.

*Chapter 5: Mitigation Strategy – Several charts summarizing mitigation actions, economic business vitality, continuity of county and local government operations, efficient use of public funds for mitigation, public awareness and support were all reviewed and updated with actions taken since the 2010 update. A matrix of the mitigation goals, strategies and actions for York County was reviewed and updated accordingly. York County EMA worked with each individual city or town to review the Local Mitigation Project in York County listing, notate actions taken since the last update and to add any newly identified projects.

*Chapter 6: Plan Maintenance Procedures – York County EMA maintains continual communications with the Local Emergency Directors in regard to any disaster issues or requests the community may have. Monthly meetings are held at which information is shared in regard to hazard mitigation actions and procedures. This section was updated with current data from the 29 cities and towns within York County.

*Appendix A: Copies of current documentation regarding public participation was provided.

Back to Agenda

4. RISK ASSESSMENT

Risk Assessment
Requirement §201.6(c)(2): The plan shall include a risk assessment that provides the factual basis for activities proposed in the strategy to reduce losses from identified hazards. Local risk assessments must provide sufficient information to enable the jurisdiction to identify and prioritize appropriate mitigation actions to reduce losses from identified hazards.

In compliance with the Code of Federal Regulations, Section 201.6(c)(2), this section of the plan identifies, profiles and assesses the vulnerability of York County to natural hazards. The risk assessment provides sufficient information to enable York County to identify and prioritize appropriate mitigation actions to reduce losses from identified hazards. This plan includes detailed descriptions of all the potential hazards that could affect York County, along with an analysis of York County's vulnerability to those identified hazards. Specific information about numbers and types of structures, potential dollar losses, and an overall description of land use trends in York County are included in this analysis. Because this is a multi-jurisdictional plan, the risks that affect only certain regions of the County were assessed separately in the context of the affected region.

This section of the Plan contains seven subsections as follows:

- Description of Natural Hazards (Subsection #5)
- Profiling Hazards (Subsection #6)
- Assessing Vulnerability (Subsection #7)
- Assessing Vulnerability: Addressing Repetitive Loss Properties (Subsection #8)
- Assessing Vulnerability: Estimating Potential Losses (Subsection #10)
- Assessing Vulnerability: Analyzing Development Trends (Subsection #11)
- Multi-Jurisdictional Risk Assessment (Subsection #12).

5. Identifying Hazards	
Requirement §201.6(c)(2)(i): (The risk assessment shall include a) description of the type…of all natural hazards that can affect the jurisdiction.	
Element	**A.** Does the new or updated plan include a description of the types of all natural hazards that affect the jurisdiction?

1. DESCRIPTION OF NATURAL HAZARDS AFFECTING THE JURISDICTION

The Maine Emergency Management Agency (MEMA) lists about 15 types of hazards on its website and profiles the nine most significant in the 2013 State Hazard Mitigation Plan. This comprehensive list of hazards was used as the basis for identifying hazards in York County.

Back to Agenda

Beyond this state listing, there are other types of hazards listed at the FEMA website events such as tsunamis, which are particular to other regions of the country, and these events were eliminated from consideration.

In order to determine which of these many types of hazards to consider in a multi-jurisdictional ~~local~~ mitigation plan for York County, three factors were taken into consideration:

1. **Likelihood of the hazard occurring in York County** - York County is simply not prone to certain events such as tsunamis, so these type of events are not included; and
2. **The ability of York County to mitigate each type of hazard** – The profiled hazards are within the authority of the County officials and/or the Communities' local authorities to mitigate.
3. **The severity of the hazard** --- As measured by the potential number of deaths, injuries, and amount of damage in dollars that would be associated with each hazard. .

The following tables show the criteria that was used to rate the likelihood and severity of natural hazards within the next five years:

SEVERITY OF HAZARD RATING		
Rating Score	**Summary Description**	**Impact**
3	Severe	Multiple deaths, mass casualties, or millions of dollars in damages
2.5	High	Deaths or injuries; or $100,000 in damages
2	Moderate	Single death or several injuries; or $10,000 in damages
1.5	Low	Injuries; or $1,000s in damages
1	Slight	No deaths, single injury; or $100s in damages

LIKELIHOOD OF HAZARD RATING	
Rating	**Description**
A	Very likely
B	Possible
C	Very unlikely

Back to Agenda

The hazard survey results are shown in the table below (The total score was derived by adding the two columns together. In the Likelihood of Hazard column, A=3, B=2. C=1).

Hazard Type	Description	Severity of Hazard	Likelihood of	Total
Severe Winter Storm	Violent weather (wind, ice, snow)	46	57	103
Severe Summer Storm	Violent weather (wind, rain, hail, lightning)	43.5	55	98.5
Flood	Overflow of water onto land areas	42	49	91
Hurricane and tropical storm	Storm producing heavy rain and wind	42.5	47	89.5
Wildfire/forest fire	Burning of trees and underbrush; possibly homes in interface	38	45	83
Tornado	Violent rotating column of air	38.5	38	76.5
Coastal Storm	Violent weather (wind, rain)	33	42	75
Dam Failure	Loss of structural integrity of dams; failure would result in flood	33.5	35	68.5
Coastal Erosion	Wearing away of coastal soil by water, ice, or wind	28	35	63
Earthquake	Event of 5.5 or more on Richter Scale	31.5	29	60.5
Landslide	Sliding down of a mass of earth, rocks, or buildings down a slope	24.5	25	49.5

After considering the entire list of potential hazard types, four were identified as falling within the scope of the York County Hazard Mitigation Plan:

1. Flood (includes dam failure, coastal erosion, and landslide)
2. Severe winter storm
3. Severe Summer Storm (includes tornado, Hurricanes and tropical storms)
4. Wildfire- Urban Interface and forest fire

Back to Agenda

The hazards profiled in this Plan, and the basis for their selection is further summarized in the table below:

Summary of Hazards Profiled in this Plan		
Hazard	**How Identified**	**Why Identified**
Flooding and Dams	Review of FEMA flood studies, FIRM maps, input from residents, review of past disaster declarations, identification of repetitive losses, review of SLOSH Maps, Committee knowledge existing Hazard Mitigation Plan, and State Plan.	Flooding is associated with the effects of hurricanes, ice and snow build-up in the headwaters and rivers, ice dams and spring runoff. Several repetitive loss properties and roadways are located in the County. The County contains major rivers and many streams and lakes. It also has dams with high and significant ~~and low~~ hazard potential requiring FERC or MEMA EAPs.
Severe Winter Storms	Review of past disaster declarations, inputs from residents, risk assessments, review of library historical data, Committee and local knowledge, records from 1998 and 2009 ice storms, existing Hazard Mitigation Plan, and State Plan.	York County is frequently hit with major northeaster blizzards. In 1998 and 2009, major ice storms hit the County knocking out power in many locations for days. The County is subjected to a wide range of weather conditions. The impacts of winter storms include erosion and wind damage, road and culvert washouts.
Severe Summer Storms	Review of past disaster declarations, inputs from residents, risk assessments, Committee and local knowledge records from the Patriot's Day and Mother's Day storms of 2008, existing Hazard Mitigation Plan, and State Plan.	The County is frequently hit with thunderstorms, heavy wind and rain storms, hail and lighting, and less frequently by hurricanes and tornadoes. Summer storms are often accompanied by high winds, road and culvert washouts. In 2008 two severe summer storms hit the County and caused widespread flooding among neighborhoods and roads.
Wildfires (Urban Interface and Forest)	Review of Maine Forest Service records, input from residents, risk assessments, Committee and local knowledge, existing Hazard Mitigation Plan, and State Plan.	Much of the County is covered with forests. Although there haven't been any significant fires in recent years, if conditions such as severe drought were to occur, there could be a greater potential for this hazard to occur.

Back to Agenda

Rationale for excluding other natural hazards:

The following table identifies the hazards that were eliminated from further consideration in the Plan, due to a lack of historical evidence, lack of overall County-wide severity, or a low likelihood for the event to occur. Even though these potential hazards are not profiled in the Plan, there is no guarantee that they would not or could not occur and cause damage.

Hazards Not Profiled in this Plan		
Hazard	**How Identified**	**Reason for Non-Inclusion**
Blight/ Infestation	Review of State Entomological Office historical records, Inputs from residents	Though the County is heavily dependent on its forest industry, there are no historical records of major damage to these products that have caused serious economic conditions.
Drought	Review of State EMA records, review of NOAA records	Severe, multi-year droughts occurred in Maine in the 1960's, 1980's and from 2000 to 2003. However, the effects of drought, such as wells running dry in some areas, have never been sufficient to create disaster conditions in York County, although they could increase the danger of wildfires.
Earthquake	Review of U.S. Geological Survey's Earthquake Hazards Program, historical data, existing Hazard Mitigation Plan.	There has never been an earthquake greater than 5.5 and there has never been a death associated with earthquakes in York County. Since this does not mean such an event couldn't occur, we will continue to monitor but not profile this hazard.
Hurricane and Tropical Storm	Review of U.S. Army Corps of Engineers Hurricane Storm Surge Inundation Maps, review of past disaster declarations, inputs from residents, risk assessments, Committee and local knowledge, existing Hazard Mitigation Plan, and State Plan.	When events do occur there is more potential for damage within the densely populated and developed coastal areas of the county. However, the events do not occur often enough to necessitate a full profile in the plan, but they will be discussed under the Severe Summer Storm profile.
Tornado	Review of NWS records, input from residents, risk assessments, Committee and local knowledge, existing Hazard Mitigation Plan,	The frequency of this event is considered moderate. Tornados have occurred in the region with increasing frequency and there is potential for damage within the densely populated, developed, and forested sections of the County. However, they haven't caused enough damage or resulted in loss of life to be fully profiled in this report. We will continue to monitor this threat and reassess its inclusion during the next plan update.
Subsidence/ Avalanche & Sinkhole	Review of Maine Geological Survey records	There aren't ~~many~~ mountains in the County that can hold amounts of snow large enough to create avalanches. There have been no known cases of subsidence or sinkhole incidents in York County.

Back to Agenda

2. PROFILING HAZARDS

6. Profiling Hazards	
Requirement §201.6(c)(2)(i): (The risk assessment shall include a) description of the ...location and extent of all natural hazards that can affect the jurisdiction. The plan shall include information on previous occurrences of hazard events and on the probability of future hazard events.	
Elements	**A.** Does the risk assessment identify the location (i.e., geographic area affected) of each natural hazard addressed in the new or updated plan?
	B. Does the risk assessment identify the extent (i.e., magnitude or severity) of each hazard addressed in the new or updated plan?
	C. Does the plan provide information on previous occurrences of each hazard addressed in the new or updated plan?
	D. Does the plan include the probability of future events (i.e., chance of occurrence) for each hazard addressed in the new or updated plan?

This section outlines information regarding the history of and future potential for individual hazard types in York County. Each of the seven hazard categories assessed in this report is summarized in the sections that follow.

HAZARD #1 - FLOOD

1. General Definition

A temporary inundation of normally dry land as a result of: 1) the overflow of inland or tidal waters, 2) the unusual and rapid accumulation or runoff of surface waters from any source. Note: the nature of York County's geography, geology and hydrology is such that flooding is usually fast rising but of short duration.

2. Types

Coastal Flooding. The temporary inundation of beaches and other land areas by the sea, either as a result of coastal storms, hurricanes (see profile of hurricanes contained in this Assessment), or erosion or landslides (see profile of erosion/landslides contained in this Assessment). Coastal flooding comes with two significant components: still water and storm surge. The typical high winds associated with coastal flooding exacerbate the flooding by "pushing" more water toward land. A nor'easter can cause a storm surge along the coast of Maine. Fetch, or the distance the wind can blow toward the shore from out at sea is a significant factor in coastal flooding depths. The shape of the ocean floor just offshore is another variable.

Dam Failure/Breach. The sudden release of water resulting from structural collapse or improper operation of the impounding structure. Dam breach can cause rapid downstream flooding, loss of life, damage to property, and the forced evacuation of people. A dam breach has a low probability of occurring, but a potentially high impact. It's different than the other types of flooding because it's due to man-made causes, but it is included under flooding because the results and impacts are the same as flooding.

Back to Agenda

Flash Flood. A flood event occurring with little or no warning where water levels rise rapidly due to heavy rains, ice jam release, or rapid snow melt.

Ice Jam. An accumulation of floating ice fragments that blocks the normal flow of a river. During a thaw or rainstorm, the rapid increase in discharge from snow melt and/or rainfall can rapidly lift and break up a thick ice cover and carry it downstream as an ice run. Ice runs can jam in river bends, shallows, bridges or against the sheet ice covering flatter reaches. The resulting ice jams can block flow so thoroughly that serious flooding may result within an hour of their formation.

Failure of an ice jam suddenly releases water downstream. Damages from ice jam flooding usually exceed those of clear water flooding because of higher than predicted flood elevations, rapid increase in water levels upstream and downstream, and physical damage caused by ice chunks. Moving ice masses can shear off trees and destroy buildings and bridges above the level of the flood waters.

Lacustrine. (Lake Flooding) occurs when the outlet for the lake cannot discharge the flood waters fast enough to maintain the normal pool elevation of the lake. During a base flood event, normal increases in water surface elevations on most Maine lakes and ponds range from 1 to 5 feet. However, in Maine there are some examples where the base flood event will reverse the flow of the outlet stream. In such instances, river and base flood elevations can rise more than 15 feet above normal pool. Maine's Mandatory Shoreland Zoning and floodplain management elevation requirements do much to mitigate for lake and pond development by imposing significant setbacks from the water's edge. While this type of flooding can impact older individual camps built near the water's edge, there are no records of major damages so this type of flood will not be further addressed in the Plan.

Riverine/Riparian. Periodic overbank flow of rivers and streams, usually the result of spring runoff, but can also be caused by major rain storms.

Tsunami. A wave produced by a disturbance that displaces a large mass of water – usually a result of geologic activities such as earthquakes, volcanic eruptions, underwater landslides, or in rare geologic cases, meteor strikes. After such a disturbance, displaced water travels outward from its site of origin as a series of unusually large waves at great speeds (Komar, 1996). All areas with an elevation less than 100 feet and within a mile of the coast could be impacted by a tsunami. Based on information obtained from the Maine Geological Survey, the chances of a catastrophic event are minimal. Moreover, with the presence of the relatively shallow Georges Bank offshore, Maine remains protected from the full force of an Atlantic Ocean tsunami.

Urban. Overflow of storm sewer systems, usually due to poor drainage, following heavy rain or rapid snow melt. The combined sanitary and storm water systems that some urban areas installed years ago cause flooding of sanitary sewerage when riparian or coastal floods occur. Runoff is increased due to a large amount of impervious surfaces such as roof tops, sidewalks and paved streets.

Back to Agenda

3. Location of Hazard

York County has many areas that are susceptible to coastal and riverine flooding, which are further exacerbated by the wide-ranging weather variables as discussed in the climate section. Nine of its 29 cities and towns are located directly on the Atlantic Ocean, and all others have at least some frontage on ponds, rivers, streams, or wetlands. With a population of 198,934, the county also has a substantial amount of impervious surfaces, particularly along the coastline, where the majority of the county's population lives and where the density of human settlement is substantially higher. York County also receives a fairly high level of precipitation at all seasons of the year.

According to the 2015 update to "Maine's Climate Future" report; "a significant increase in extreme precipitation events (more frequent and intense storms) has been observed across Maine and other parts of the eastern U.S. - we define an extreme participation event for this analysis as one in which two or more inches (five or more cm) of precipitation falls within a 24-hour period. Historical measurements show that extreme events vary across the state, occurring most often in the coastal zone and western mountains."

Flooding is common in the spring as snow melts, especially in years with large amounts of snowfall and/or with high levels of rainfall in the months of April and May. The majority of the flood damage in the County is caused by winter runoff in the springtime, which undercuts or overtops local roads. When York County has an above average snowfall for the winter and then warmer temperatures and rainfall suddenly arrive in the spring, the snow pack melts off more quickly than the watersheds can handle. This can cause local water bodies to overflow their boundaries and flood nearby road surfaces. Typically, the road damage is not major, although it can absorb the municipal road budget for an entire year and does happen in several towns every year. Less common and less damaging is flooding in the early winter (November and December) when early snowfall is melted by mild weather and rainfall.

Location of flooding along major river basins.

The Saco River Basin is generally described as embracing all of York County as well as most of Cumberland County and the southern portion of Oxford County. Several small rivers with small exclusive basins comprise this area. It includes small rivers like the Kennebunk, Mousam, Presumpscot, Royal, Ogunquit and the Maine portion of the Piscataqua and Salmon Rivers. Many of these smaller rivers such as the Mousam have experienced significant flooding in recent years.

Location of flood plains.

The locations of FIRM flood risk areas were documented. In total, of the 634,000 acres of land area in York County, 68,770 acres are rated as flood hazard areas by FIRM, or about 11 percent of the county's total land and water area. Most of the FIRM flood hazard areas (6,020 acres) are classified as "A," or areas in the 100-year floodplain. The remaining 369 acres are classified as "VE," or areas in the 100-year floodplain with velocity hazards due to wave action. All VE areas are located either directly on the Atlantic Ocean or in tidal areas of major rivers such as the Saco, York, Mousam, and Piscataqua.

Back to Agenda

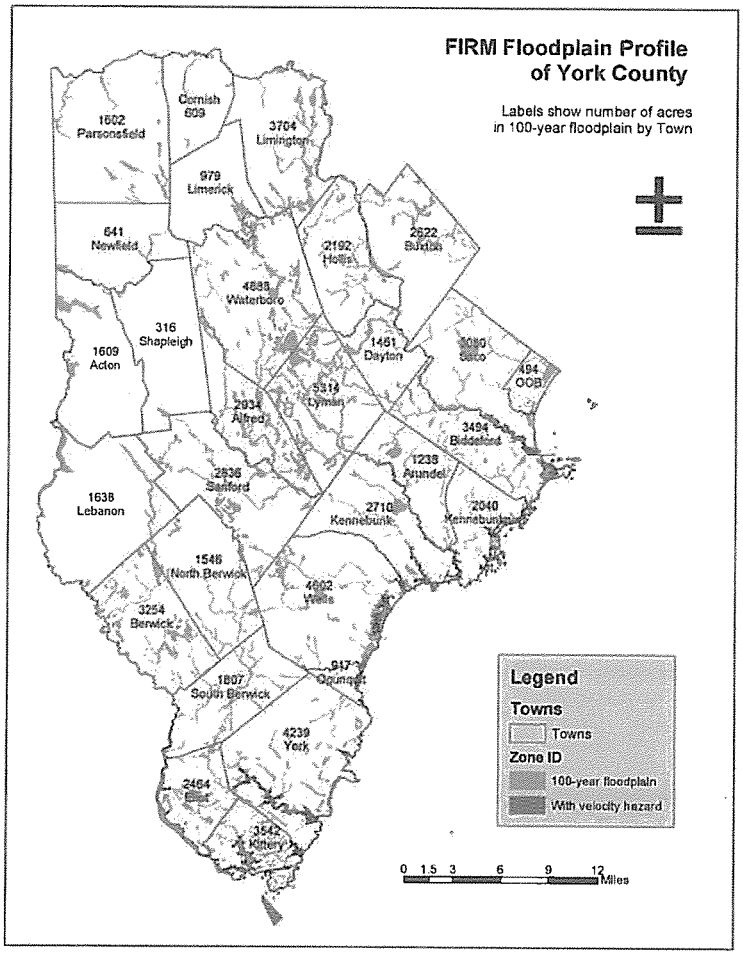

This map displays the locations of FIRM flood hazard areas and how much acreage of 100-year floodplain exist in each of the 29 cities and towns in York County.

Of the roughly 500 places in York County's road network that have locally identified flood risks, about 80 percent are within the 100-year flood plain as defined by FEMA. However, there is no direct relationship between the amount of floodplain and the number of locations identified as flood risks. This is due to two factors: the fact that road locations vary; and the presence of existing mitigation measures in many locations.

For example, the Town of Wells has 428 acres located in floodplains, but just seven flood locations. The Town of Buxton, though, has 43 flood locations but just 244 acres of floodplain.

4. Extent of Hazard

Generous precipitation (about 46 inches a year) contributes to the flood potential. The low pressure system over the Eastern Seaboard and the tendency of some storms to follow one another in rapid succession provide heavy, combined moisture. Water abundance is one of the County's most valuable natural resources and its primary hazard.

Back to Agenda

The following paragraph pertains to impact from flooding and has been moved to page 4-35; Impacts of each hazard on York County – Flooding.

Flood damages to roads, bridges and ditches continue to be a common occurrence throughout York County. Most washouts are quickly repaired, but often are not mitigated. As a result, replacement culverts, ditching and fill are just as susceptible to future flood damages as they were before the storm event.

Extent (nature) of the Hazard from Coastal Flooding.
The gradual rise in the level of the sea is having a profound effect on the nature of coastal flooding. The Maine Geological Survey (MGS) and Southern Maine Planning & Development Commission (SMPDC) worked to generate a series of maps showing the potential impact of two feet of sea level rise on the York County coastline. Maps have been completed for Old Orchard Beach, Saco, Biddeford, Kennebunk, Kennebunkport, Wells, York, and Kittery. The MGS is working with the assumption that sea level will rise two feet by 2100, which is the official projection used in evaluating permits under the Maine Sand Dune Act and Rules. This prediction is conservative, and is based on IPCC estimates (International Panel on Climate Change). Measurements of actual, measured sea level rise from the Portland tide gauge, the nearest information source with long term, accurate data, shows an average rate of sea level rise of 11/64 inch (4.3 mm) in this area, for the period 1993 to 2011. The rate of sea level rise over the past 100 years has therefore been roughly 7 inches per century, using the English system of measurement.

During the Patriot's Day storm of 2007, the surge on top of the high tide flooded the Ocean Park neighborhood of Old Orchard Beach, and the area of inundation matches the MGS scenario for flooding by the highest annual tide in the year 2100. In other words, by the year 2100, it is expected that Ocean Park flooding as serious as that seen during the Patriot's Day storm of 2007, will occur every year during the normal high spring tides at new moons, without any storm activity.

With additional sea level rise, damage from 100-year storms (those storms with a 1 percent chance of occurring in any given year) may be expected to occur on a 10 year interval (a 10% probability in any given year). This is because less surge will be needed to cause damage as sea level increases. As a result, more homes, businesses, public infrastructure such as roads, and entire communities will be subject to more devastating coastal storms, as well as coastal erosion and landslides, on a more frequent basis. There is also concern in the scientific community that global warming may be increasing the intensity of coastal storms.

Wave action generated by winter storms, particularly nor'easters, is the most threatening cause of coastal flooding. The Patriot's Day storm mentioned above was a nor'easter.

Hurricanes occur far less frequently than winter storms, but can be just as, if not more, devastating than a winter storm (see section on hurricanes below).

A lack of detailed, accurate mapping of flood hazards along the coast has been an issue for many years. However, there have been several major mapping initiatives dating from the mid 2000s:

Back to Agenda

- **Hurricane Surge Inundation Maps.** Hurricane Surge Inundation Maps have been prepared for the coast by the US Army Corps of Engineers (see Hurricane section).

- **FEMA Multi-Hazard Flood Map Modernization (Risk Mapping) Program.** In the past, FEMA's National Flood Insurance Program (NFIP) remapping efforts have been limited by technology and funding. Congress has taken steps in the last few years to jump start this process. As a result, in the summer of 2010, digitized floodplain maps for York County were released as preliminary maps for community review. The State Planning Office initially anticipated that the maps would become final during the summer of 2011, however major concerns over the methodology used to create the maps has delayed the project indefinitely.

- **LIDAR Mapping.** Detailed topographic maps were prepared for coastal York and Cumberland Counties, as well as portions of Oxford County in Western Maine, by a consortium of agencies including NOAA and the Army Corps of Engineers. The amount of LIDAR mapping was restricted to within a few hundred feet of the coast and was used to develop better coastal modeling. Some of these models are now being challenged by several communities as being too conservative. As of 2013, LIDAR data has been gathered for the first few hundred feet of the entire Maine coast, and for portions of Androscoggin, Oxford, and Kennebec Counties.

Coastal Erosion

York County beaches, in both developed and undeveloped areas, have been mapped extensively by the Maine Geological Service (MGS), for its role in assisting the Department of Environmental Protection to administer the Sand Dune Act. All significant development activity in designated front or back dune areas must receive a Sand Dune permit from the DEP. Coastal Area Hazard Maps have been developed by DEP, based on FEMA flood map velocity zones, measured erosion rates, and designations of front and back dune areas, which predict areas of erosion damage that might be expected after ocean surges. These maps are available to emergency managers to show which oceanfront areas might be expected to receive the most damage from future storms. Emergency managers are unfortunately familiar with these areas, as they typically receive some damage each decade.

Extent of the Hazard from Dam Failure/breach.

Maine law, consistent with federal law, classifies the hazard potential of dams as High, Significant or Low. If they failed, High Hazard dams could cause loss of life; Significant Hazard dams could cause significant property damage and Low Hazard dams would generally cause damage only to the owner's property. Therefore, it's possible that a small (low head) dam located above a large community could be rated High Hazard while a structurally larger dam sited in an unpopulated area could be a Low Hazard potential. In York County, there are four (4) High Hazard dams and eleven (11) Significant Hazard dams, as shown in the table below.

Back to Agenda

York County High and Significant Hazard Dams

High Hazard Dams

MEMA ID	DAM NAME	OWNER	LOCATION	RIVER
14.0	Emery Mills	Sanford	Shapleigh	Mousam River
402.0	Estes Lake	KEI Power Management Inc.	Sanford	Mousam River
9.0	Mill Street	Sanford	Sanford	Mousam River
497.0	Skelton	Maine Hydro - NextEra Energy	Dayton / Buxton	Saco River

Significant Hazard Dams

MEMA ID	DAM NAME	OWNER	LOCATION	RIVER
13.0	Balch Pond	Acton / Newfield	Acton / Newfield	Little Ossipee River
175.0	Bell Marsh	Kittery Water District	York	Smelt Brook
175.1	Bell Marsh Dike	Kittery Water District	York	Smelt Brook
15.0	Boulter	Kittery Water District	York	Bass Cove Creek
16.1	Chases Pond	York Water District	York	Cape Neddick River
16.2	Chases Pond Dike	York Water District	York	Cape Neddick River
384.0	Ledgemere	Maine Renewables, LLC (div. Synergics)	Waterboro / Limerick	Little Ossipee River
17.0	Middle Pond	Kittery Water District	York	Cider Hill Creek
2.0	Old Falls	KEI Power Management Inc.	Kennebunk	Mousam River
12.0	River Street	Sanford	Sanford	Mousam River
835.0	Wadleigh	Wadlleigh Pond Association	Lyman	Swan Pond Creek

Maine dams were constructed incrementally over a period of 300 years. Businesses harnessed the abundant fast flowing rivers and rocky rapids for the development of energy and transportation. Many dams throughout the country are now aged, and in Maine the majority of these structures are nearly 100 years old and beyond the normal design life of civil engineering works. Many are low head dams constructed using local materials of stone, timber and earth. Dam failure is not a frequent occurrence, but it can and does occur.

5. Previous occurrences

Historically, flooding has been the most common disaster type to affect York County. Over the 26-year span from 1987 to 2013, there were fifteen federally declared disasters in the county involving floods. These major flooding events affected each of the county's 29 cities and towns, with each receiving assistance at least twice during the period, and the average flood resulted in disaster relief funding to 15 towns. A total of $10.95 million in FEMA relief funding was spent in York County to address damages from these floods.

Flood damages to roads, bridges and ditches continue to be the most common occurrence in York County, especially in heavy rain events (> 3-5" in 24 hours). Depending on the saturation level of the ground at the time of the event and the duration of the storm, the extent of damages can vary from a few overloaded culverts to major road washouts throughout the County.

Back to Agenda

The table below provides an historical summary of the flooding events affecting York County. Data source was MEMA – State of Maine Hazard Mitigation Plan. Where damages are provided they reflect the total declaration amount for the State.

No.	Year	Month	County	Damages	Declaration
1	1987	April 1 (The "April Fool's Storm")	York	Major damage to homes, businesses, public buildings (town halls, fire stations, libraries) parks and recreation areas, agricultural equipment and livestock; the pollution closed clam beds downstream and severely damaged water and sanitation district facilities; erosion to river banks	Presidential FEMA-788-DR-ME
2	1992	27-Mar	York	Heavy rains and ice jams severely damaged gravel roads and culverts. Many small, rural communities could not cover the recovery costs.	Presidential FEMA-940-DR-ME
3	1993	April (The "Easter Flood")	York	Heavy rains, snow melt and ice jams damaged dirt roads and culverts damage, exceeding the annual road repair and maintenance budgets in a number of rural towns	Presidential FEMA-988-DR-ME
4	1996	Apr 16-17	York	Flooding and mudslides from heavy rains and snowmelt damaged roads, seawalls, several dams, 2 homes, and washed out culverts	Presidential FEMA-1114-DR-ME (addendum to 1106)
5	1996	Oct 20-21	York	Record breaking rains (in excess of 19 inches at Camp Ellis) from combined effects of a strong northeaster and Hurricane Lili. 1,000 structures were inundated, several dams breached, and roads, bridges and culverts were destroyed	Presidential FEMA-1143-DR-ME
6	1998	June 13 to July 1	York	Infrastructure damage from heavy rains to public roads and drainage systems in rural areas	Presidential FEMA-1232-DR-ME

Back to Agenda

No.	Year	Month	County	Damages	Declaration
7	1998	Oct 8-11	York	Inland and coastal flooding; erosion resulting from slow moving storm, heavy rains. In Kennebunk, the combination of astronomically high tides and the large waves generated by the storm undermined 230 feet of seawall on Great Hill Rd.	Presidential FEMA-1263-DR-ME
8	2001	Mar 5-31	York	Flooding from severe winter storms, record snowfall, high winds, heavy rains & run-off, ice jams. In York and Berwick, The coastal storm that brought heavy snow to much of western Maine dropped 2 to 5 inches of rain in the southwestern part of the state. Small rivers and streams overflowed their banks resulting in flooded roads and washouts. Melting snow also contributed to the runoff problem.	Presidential FEMA-1371-DR-ME
9	2005	Mar 29 – May 3	York	Severe storms, flooding, snow melt and ice jams	Presidential FEMA-1591-DR-ME
10	2006	May 13-25 (The "Mother's Day Storm")	York	Severe storms and flooding	Presidential FEMA-1644-DR-ME
11	2007	Apr 15-23 (The "Patriot's Day Storm")	York	Severe storms and inland and coastal flooding	Presidential FEMA-1693-DR-ME
12	2008	July 18 to August 16	York	Severe storms, flooding, and tornadoes	Presidential FEMA-1788-DR-ME
13	2008	Dec 11-29	York	Severe winter storm and flooding	Presidential FEMA-1815-DR-ME
14	2010	Feb 23 – Mar 2	York	Severe winter storms, flooding. Heavy rain resulted in county wide flooding of small rivers and streams in western York County. Road washouts were numerous with moderate to major damage occurring to roadways. Homes and businesses were also flooded.	Presidential FEMA-1891-DR-ME
15	2010	Mar 12 – Apr 1	York	Severe winter storms, flooding. Rainfall amounts ranged from 4 to 9 inches in southwest Maine which caused serious flooding. York County was especially hard hit with a million dollars worth of damage due to flooding of small rivers and streams.	Presidential FEMA-1920-DR-ME

Back to Agenda

Patriot's Day Storm, April 16, 2007. According to the Gulf of Maine Ocean Observing System website, the Patriot's Day Storm of 2007 will be long remembered for its meteorological significance and devastating power. Violent waves destroyed homes, businesses, coastal roads and beaches, while forceful winds tore down power lines, leaving many residents in the dark for days. Portland had a peak wind of 59 mph measured on April 16th. An abnormally high spring tide plus a storm surge of 3 feet (2.72 feet at the Portland tide gauge, the closest gauge to York County just 10 miles north of the county line) produced a high tide of 13.28 feet (the 7th highest tide measured since the early 1900s).

The National Weather Service's models had predicted a large snowstorm the week before that didn't occur. Instead, the jet stream carried the storm's energy over New England, dropping five to eight inches of rain along the coast, resulting in a significant coastal flooding event. During the Patriot's Day storm, there were four high tide cycles in which the water was near or above flood stage and the waves were greater than 10 feet in height. This combination caused a tremendous amount of damage. Rainfall in Southern Maine was near the 100 year recurrence interval at Sanford and Eliot. The worst flooding occurred on the smaller rivers in York County. Damage to infrastructure was severe (roads, bridges, waste water treatment plants, public buildings). Homes and businesses were also damaged. In York County, two people were killed when they attempted to cross a flooded road on foot and were swept away.

6. Probability of Future Occurrences

Based on the geography and history of York County, it can be expected that minor flooding will occur annually at some locations and that a major flood event causing significant damage to infrastructure and property will occur at least once every decade.

The gradual rise in the level of the sea is having a profound effect on the nature of coastal flooding. The sea has risen about six inches since 1900, and is conservatively projected by the Maine Geological Survey to rise by roughly two additional feet by 2100. Along the York County coast, if the 10-year and 100-year storm elevations are only one foot apart, a sea level rise of one (1) foot means that a storm that had a 1% chance of occurring in any one year (the 100-year storm) at the original elevation will have a 10% chance of occurring in any one year (the 10-year storm) at the new elevation. As a result, more homes, businesses, public infrastructure such as roads, and entire communities will be subject to more devastating coastal storms, as well as coastal erosion and landslides, on a more frequent basis. There is also concern in the scientific community that global warming may be increasing the intensity of coastal storms.

Probability of Dam Failure/Breach: Because most of Maine's dams were constructed 100 years ago the possibility of failure increases but is not predictable. Many dams throughout the County are now aged and beyond the normal design life of civil engineering works. Many are low head dams constructed using local materials of stone, timber and earth. Acknowledging this, the Maine Dam Safety Law requires regular inspections, maintenance and current Emergency Action Plans (EAPs).

Back to Agenda

HAZARD # 2 – SEVERE WINTER STORM

1. General Definition

Severe winter storms are characterized by low temperatures, strong winds, and large quantities of precipitation in the form of snow, rain, or sleet.

2. Types

Blizzard. Sustained winds of 40 miles per hour (mph) or more or gusting up to at least 50 mph with heavy falling or blowing snow, persisting for one hour or more, temperatures of ten degrees Fahrenheit or colder and potentially life-threatening traveling conditions.

Ice Storms. Rain which freezes upon impact. Ice coating at least one-fourth inch in thickness is heavy enough to damage trees, overhead wires, and similar objects and to produce widespread power outage.

Nor'easter. Nor'easters are extratropical coastal storms that can produce tremendous amounts of precipitation and strong winds that can cause coastal flooding damage. When the precipitation is in the form of snow, sleet or freezing rain, it can damage overhead utility lines and become a highway driving hazard.

Sleet Storm. Frozen rain drops (ice pellets) which bounce when hitting the ground or other objects. Does not stick to objects, but in accumulated depths of two inches or more, produces hazardous driving conditions.

Heavy Snow Storm. A snowfall of fifteen inches or more within 12 to 24 hours, which disrupts or slows transportation systems and public safety departments' response capability.

3. Location

The entire county is subject to severe storms every winter. A winter storm event will often affect portions of the county differently. The northwestern portion of the county will generally get the most snow due to higher elevations found in that region. The middle-interior portion of the county will generally snow, but not usually as much as the northwestern portion. The coastal areas of the county will usually see more rain due to warmer temperatures near the ocean.

The National Climate Data Center (a division of NOAA) reported statistics on – winter events over the past ten years. Note: an "event" could be as little as a "dusting" of snow, or as severe as a blizzard. During the 10-year period (2005-2015), York County experienced a total of 98 winter events, an average of about 9.8 winter events per year. The number of events per year varies, as well as the severity, as there were as few as three in 2006 and as many as 17 in 2008. The tables below and their supporting text summarize the profile of these storms.

The National Climate Data Center (a division of NOAA) reports statistics on severe winter storms from January 1993-April 2010. This data therefore illustrates 17 years of winter storm history for York County.

Back to Agenda

During the 17-year period, York County experienced a total of **124** winter events, with an average of about seven severe winter storms per year. The tables below and their supporting text summarize the profile of these storms.

WINTER STORMS IN YORK COUNTY, 1993-2010

STORM TYPE	# STORMS	% TOTAL	# DEATHS	PROPERTY DAMAGE
Freezing Rain	7	6.3	0	$0
Heavy Snow	73	57	0	$500,000
Ice Storm	4	4	1	$317,000,000
Light/Moderate Snow	20	15.8	0	$0
Winter Storm	16	11.9	0	$0
Winter Weather/Mix	4	3.2	0	$0
Total	**124**		**1**	**$317,500,000**

Of the 124 total storms from 2000-2010, 93 were classified as snowstorms, with 73 being heavy snow and 20 being light to moderate snow. While these storms were the most frequent, they did not do a great deal of damage.

The only winter storms from 1993-2010 that caused any major damage were two ice storms in January 1998 and 2008, which caused property damage of $313 million and $4.0 million respectively and resulted in one fatality in 1998. Though these were the only major ice storms of the period, they were by far the most hazardous severe storm events in the county from 2000-2010.

Nearly all of the severe storms in York County occurred in the period between December and March, as 113 of the 124 occurred during this four month period. The most likely months for winter storms were December and January, during 50 percent of all winter storms occurred, and during which all property damages from winter storms occurred. February and March accounted for 39 percent of the storms, with a handful occurring in April and November as well.

WINTER STORMS IN YORK COUNTY, 2000-2010

MONTH	# STORMS	% OF TOTAL	# DEATHS	PROPERTY DAMAGE
January	32	25.8	1	$317,500,000
February	25	20.2	0	$0
March	25	20.2	0	$0
April	6	4.8	0	$0
November	6	4.8	0	$0
December	30	24.2	0	$4,900,000
Total	**124**		**1**	**$322,400,000**

Another consideration in assessing past winter storms is the time of day they occurred. Winter storms were more likely to occur during the AM hours, as 53% of storms arrived in York County

Back to Agenda

between midnight and 11:59 AM. Afternoon storms were somewhat less likely to occur, and evening storms were the least likely.

4. Extent

Average seasonal snowfall amounts generally increase north and westward from the coastal region. Total seasonal snowfall averages between 50 and 80 inches in the Coastal Division, and between 60 to 90 inches in the Southern Interior Division.

The snowfall season in York County usually runs from November to April and sometimes in May. Occasionally an early season storm can bring snow in the first weeks of October even along the coast. January is usually the snowiest month averaging around 20 inches with December usually averaging out to be the second snowiest month (avg. 17 in.). The snowpack makes an important contribution to both surface and groundwater supplies, and years with a low snowpack can lead to water shortages by late summer. Melting of the snowpack in April and May is often gradual enough to prevent serious flooding, although there have been times when a quick melt has led to disastrous conditions.

During the winter months, York County often has heavy snowfall, or snow combined with high winds, freezing rain or ice storms. Nor'easters, the most severe form, occur during the winter, spring and fall. They rarely develop during the summer. Precipitation amounts can exceed several inches of water equivalent (20-30 inches of snow or more), while wind speeds can be equal to or greater than those for hurricanes that reach Maine.

5. Probability of Future Occurrences

Using history as the predictor of future severe winter storms, York County is assumed to be at risk for about seven such storms each winter. More importantly, the county should expect one especially damaging storm at least once every 10 years, similar to the ice storm of January 5, 1998 and December 2008. The greatest amount of future severe winter storms can be expected to occur in December or January, with significant numbers also expected in February, and March.

The time of day at which storms occur is also important, as overnight storms allow for the closure of schools and businesses, whereas storms during the day force people to travel home during storm conditions. Based on experience, storms are most likely overnight or during the morning, but afternoon storms are still somewhat likely.

Back to Agenda

HAZARD #3 – SEVERE SUMMER STORM

1. Definition

A violent weather phenomenon producing winds, heavy rains, lightning, and hail that can cause injuries, and destruction of property, crops, and livestock.

2. Types

Hurricane. An intense tropical cyclone, formed in the atmosphere over warm ocean areas, in which wind speeds reach seventy-four miles per hour or more and blow in a large spiral around a relatively calm center called the "eye" It produces damage and destruction from heavy rainfalls, high winds, and flooding.

Lightning. An electrical discharge that results from the buildup of positive and negative charges within a thunderstorm. When the buildup becomes strong enough, lightning appears as a"bolt." This flash of light usually occurs within the clouds or between the clouds and the ground. A bolt of lightning reaches a temperature approaching 50,000 degrees Fahrenheit in a split second. The rapid heating and cooling causes thunder.

Thunderstorm. A thunderstorm is formed from a combination of moisture, rapidly rising warm air and a force capable of lifting air such as a warm or cold front, or a sea breeze. All thunderstorms have lightning and can occur singly, in clusters or in lines.

Tornado. A violently rotating column of air extending downward from a thunderstorm to the ground. The distinctive slender, funnel shaped cloud, with wind velocities of up to 300 miles per hour at the central core, destroys everything along its narrow ground path.

The Fujita Tornado Scale (abbreviated)

Maximum Wind Speeds	Tornado Category	Equivalent Saffir-Simpson Scale (for hurricanes)	Typical Effects
40-72 mph	F0	NA	Gale tornado; breaks twigs and branches off trees; pushes over shallow-rooted trees; damages signboards; some windows broken.
73-112 mph	F1	Cat 1/2/3	Moderate tornado. Moderate damage: peels surfaces off roofs; mobile homes pushed off foundations or overturned; outbuildings demolished; moving autos pushed off roads; trees snapped or broken

Back to Agenda

113-157 mph	F2	Cat 3/4/5	Significant tornado; considerable damage: roofs torn off frame houses; mobile homes demolished; large trees snapped or uprooted; light-object missiles generated
158-206 mph	F3	Cat 5	Severe tornado; severe damage: roofs and some walls torn off well-constructed houses; trains overturned; most trees in forests uprooted; heavy cars lifted off the ground and thrown
207-260 mph	F4	NA	Devastating tornado; devastating damage: well constructed homes leveled; structures with weak foundations blown off some distance; cars thrown and disintegrated; large missiles generated; trees in forest uprooted and carried some distance away.

3. Location

The entire County is vulnerable to one or more severe summer storms each year, usually in the form of thunderstorms. The effects are usually more common in the interior and western region, and less frequent along the Atlantic coast where the cooling effects of the ocean tend to suppress thunderstorm conditions.

Location of Hurricanes. The low lying coastal area in York County (towns of Kittery, York, Ogunquit, Wells, Kennebunk, Kennebunkport, and the cities of Saco and Biddeford) would be the most susceptible to land falling hurricanes. in this region.

Hurricane Surge Inundation Maps. The U.S. Army Corps of Engineers revised the Hurricane Surge Inundation Maps for Maine in 2016 based on the SLOSH (Sea, Lake, and Overland Surges from Hurricanes) Model prepared by the National Weather Service. The Hurricane Surge Inundation Maps show, for each hurricane category, the areas that would be inundated from the worst-case combination of hurricane landfall location, forward speed, and direction at each location along the coast. These maps are available in digital format.

MEMA and County EMA offices will maintain respective sets of the 2016 version of the "Hurricane Storm Surge Inundation Maps" for the entire coastal region, including the tidal rivers of Maine. These maps will be used as a disaster response planning tool. It should be noted that there are two sets of maps for the entire coast. The first set, prepared in 2004, is based on mean sea level. The second set, prepared about a year later, is based on mean high tide.

According to NOAA, tropical storm season lasts from June 1 to November 30, and an average of 10 tropical storms develop along the eastern seaboard each year. On average, six of these 10 become hurricanes. These storms generally develop in the Gulf of Mexico or the Caribbean Sea and typically lose strength as they travel northward towards Maine.

Back to Agenda

In York County, hurricanes and tropical storms generally are limited to the months of August and September, as the climate in Southern Maine is not nearly as conducive to such storms in the late spring and early fall as in areas to the south.

4. Extent

The National Climate Data Center reports data on summer storm events. Every few years between May and November, tropical storms reach York County usually with winds of less than 74 miles per hour, in the "post hurricane stage." When it comes to hurricanes in York County, wind speeds do not tell the whole story. Storm surge, water that is pushed toward the shore by the force of the swirling winds with low barometric pressure, has the greatest potential for loss of life. This advancing surge combines with the normal tides to create the hurricane storm tides which can increase the mean water level 15 feet or more. While hurricanes produce storm surges, and a threat to York County's coastal residents and businesses, they also produce inland flooding. As previously described in the flood section, the major rivers provide ample opportunity for flooding in any of its 16 counties, including York County. Intense rainfall is not directly related to the wind speed of tropical cyclones, or hurricanes. In fact, some of the greatest rainfall amounts have occurred from weaker storms that drifted slowly or stalled over an area.

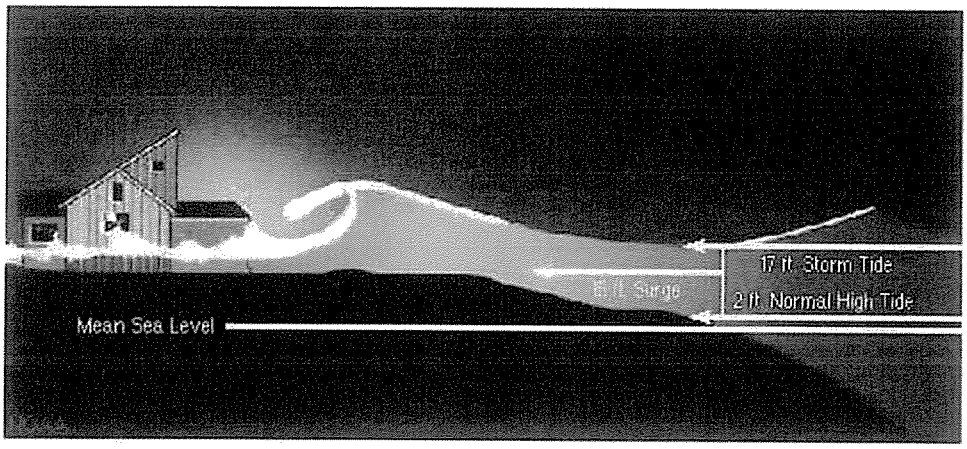

The currents created by the tide combine with the action of the waves to severely erode beaches and coastal highways. Many buildings withstand hurricane force winds until their foundations, undermined by erosion, are weakened and fail.

See table below for the types of summer storm events that have affected the County between 2006-2015. Hail and thunderstorms occurred most frequently, followed by lightning, strong winds, and flooding.

Back to Agenda

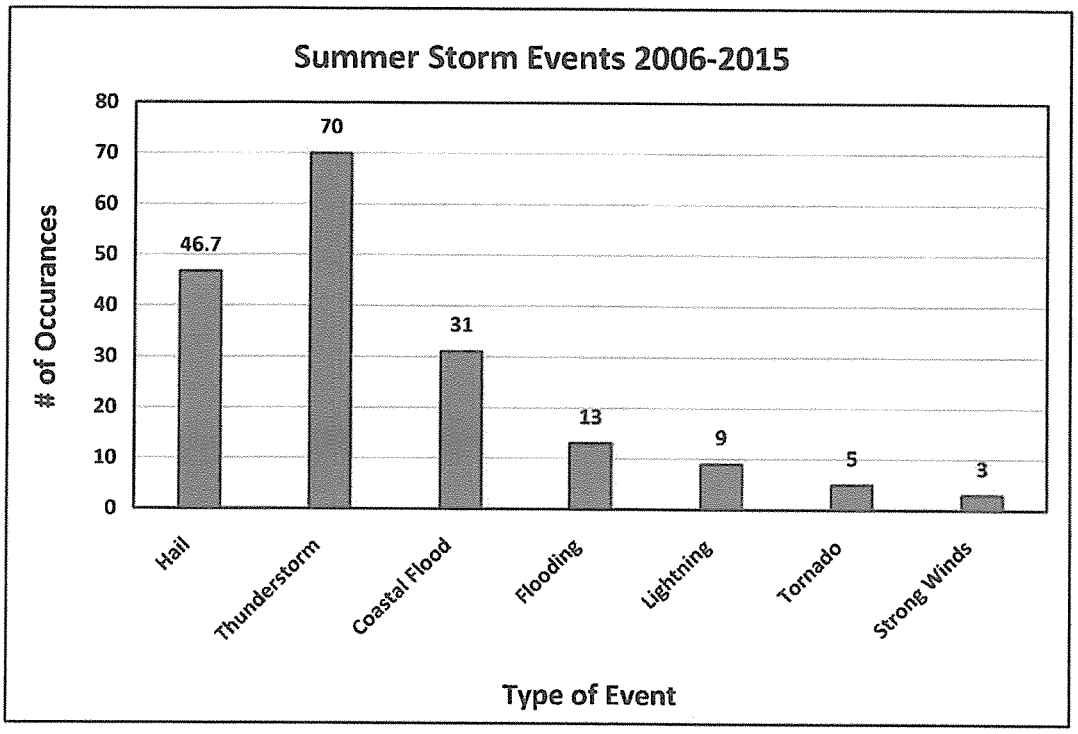

22% of the summer storm events reported since 2006 resulted in private property damage (see table below). Since 2006 the amount of property damage due to severe storms has exceeded $56 million (some of that damage occurred in other counties). According to the data below, flooding events tend to cause the most property damage. Although there are many occurrences, only damages of $10,000 and above are listed in the table.

Severe Summer Storm Damage Jan 1, 2006 - December 31, 2015			
Location	**Date**	**Type**	**Property Damage**
COUNTYWIDE	5/13/2006	Coastal Flood	9.500M
YORK COUNTY COASTLINE	5/13/2006	Coastal Flood	200.00K
YORK COUNTY COASTLINE	5/14/2006	Coastal Flood	100.00K
YORK COUNTY COASTLINE	5/16/2006	Lightning	100.00K
YORK VILLAGE	6/1/2006	Hail	50.00K
NORTH BERWICK	9/29/2006	Hail	125.00K
ALFRED	4/16/2007	Coastal Flood	25.000M
YORK COUNTY COASTLINE	4/16/2007	Coastal Flood	15.000M
YORK COUNTY COASTLINE	4/16/2007	Coastal Flood	500.00K
YORK COUNTY COASTLINE	4/17/2007	Coastal Flood	20.00K
YORK COUNTY COASTLINE	4/17/2007	Coastal Flood	200.00K
YORK COUNTY COASTLINE	4/18/2007	Lightning	50.00K
YORK COUNTY COASTLINE	5/16/2007	Hail	10.00K
SANFORD	6/22/2008	Hail	100.00K
SANFORD	6/24/2008	Thunderstorm Wind	60.00K

Back to Agenda

ACTON	8/8/2008	Flood	35.00K
CENTER LEBANON	8/8/2008	Flood	639.00K
SACO THURSTON FLD AR	8/8/2008	Flood	37.00K
SHAPLEIGH	8/8/2008	Flood	15.00K
WATERBORO CENTER	8/8/2008	Flood	36.00K
ALFRED	8/8/2008	Hail	67.00K
YORK COUNTY COASTLINE	6/21/2009	Hail	12.50K
KENNEBUNK	7/2/2009	Flash Flood	10.00K
ARUNDEL	7/2/2009	Hail	25.00K
PARSONSFIELD	2/25/2010	Flood	900.00K
OLD ORCHARD BEACH	3/14/2010	Flood	1.000M
OLD ORCHARD BEACH	3/23/2010	Flood	100.00K
OLD ORCHARD BEACH	3/30/2010	Coastal Flood	250.00K
YORK COUNTY COASTLINE	3/30/2010	Thunderstorm Wind	20.00K
YORK COUNTY COASTLINE	12/27/2012	Coastal Flood	40.00K
YORK COUNTY COASTLINE	12/15/2013	Coastal Flood	25.00K
YORK COUNTY COASTLINE	1/3/2014	Thunderstorm Wind	15.00K
YORK VILLAGE	7/15/2014	Thunderstorm Wind	1.400M
YORK COUNTY COASTLINE	1/27/2015	Coastal Flood	100.00K
YORK COUNTY COASTLINE	4/20/2015	Thunderstorm Wind	125.00K
YORK COUNTY COASTLINE	9/30/2015	Coastal Flood	75.00K

Source: NWS - Gray

The majority of the damages are usually attributed to flooding and hail and largely affect personal property. Flooding damages the structures located in the flooded area and hail storms produce widespread damage to buildings and cars.

Previous Occurrences of Hurricanes and Tropical Storms

The National Oceanic and Atmospheric Administration (NOAA) Coastal Services Center maintains maps and data for the entire country regarding hurricanes going back as far as 1851. For this analysis, data has only been collected as far back as 1951.

The Coastal Services Center reports that there have been 17 hurricanes, extratropical storms, tropical storms, and tropical depressions that have either passed through York County or within 100 miles of the county since 1951. Of these, four actually passed through the county, and the remaining 13 came within 100 miles. Of the17 total storms, only four reached the hurricane level: Carol in 1954, Donna in 1960, Gloria in 1985-which was a Category 1, and Bob in 1991. The table and map below illustrate the history of hurricane and other tropical storm activity in York County. The Town of Alfred is the county's geographic center point on the map.

Back to Agenda

HURRICANES AND TROPICAL STORMS IN AND NEAR YORK COUNTY 1950-DECEMBER 2015						
#	YEAR	DATE	NAME	MAX SPEED	CATEGORY	MILES FROM ALFRED, MAINE
1.	1952	09/02	Able	35	Tropical Depression	1
2.	**1954**	**08/31**	**Carol**	**98**	**Hurricane, Category 2**	50
3.	1959	10/01	Gracie	35	Extratropical Storm	37
4.	1960	07/30	Brenda	52	Tropical Storm	30
5.	**1960**	**09/12**	**Donna**	**103**	**Hurricane, Category 2**	**15**
6.	1961	09/26	Esther	40	Tropical Storm	40
7.	1961	09/15	Not Named	40	Tropical Storm	2
8.	1971	08/28	Doria	52	Tropical Storm	60
9.	1979	09/06	David	46	Extratropical Storm	70
10.	**1985**	**09/27**	**Gloria**	**86**	**Hurricane, Category 1**	**40**
11.	1988	08/30	Chris	23	Tropical Depression	25
12.	**1991**	**08/19**	**Bob**	**98**	**Hurricane, Category 2**	**35**
13.	1996	07/14	Bertha	69	Tropical Storm	27
14.	1999	09/17	Floyd	57	Tropical Storm	15
15.	2004	08/31	Hermine	35	Tropical Storm	30
16.	2007	06/05	Barry	35	Extratropical Storm	25
17.	2011	08/27-29	Irene	65	Tropical Storm	5

The following map has been updated to December of 2015:

Back to Agenda

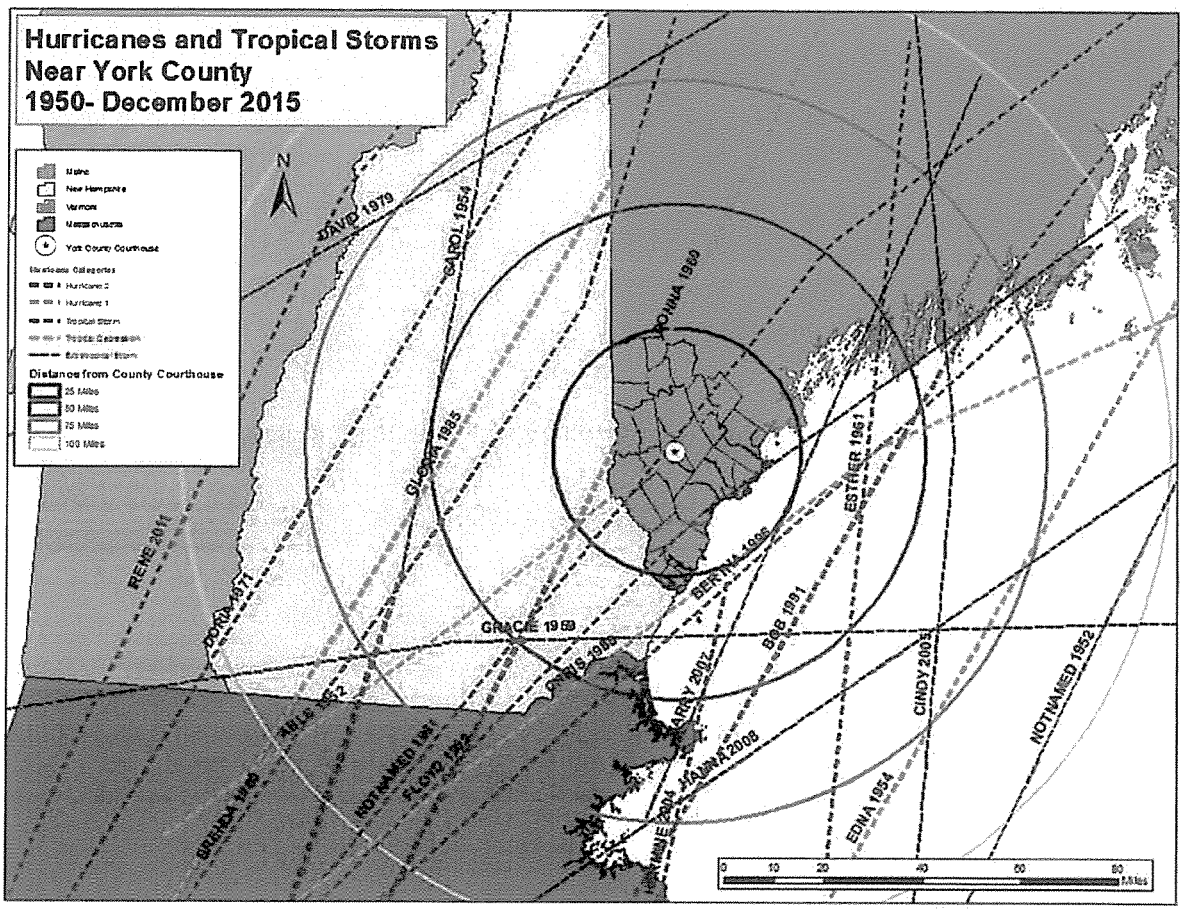

In addition to these storms, York County has also been affected by hurricanes that have traveled more than 100 miles away. One example of this was Hurricane Edna in 1954, which traveled well off the coast, but produced more than seven inches of rain in York County.

5. Probability of Future Occurrences

York County will continue to be affected by all types of severe summer storms. Over the past 50 years, York County has experienced a significant tropical storm about once every three to four years and a hurricane about once every 12 years on average. Given the county's location on the Atlantic coast, it will remain at risk for future hurricane events, and there is no reason to assume that the frequency of hurricanes and tropical storms in the region will diminish in the future. To the contrary, NOAA has predicted an increase in hurricanes in the future due to climate change. While these hurricanes rarely reach the County, the remnants of nearby hurricanes in the Atlantic Ocean often affect the Maine coastline with storm surges, coastal storms, flooding, high winds. Also, based on past storm events, it is very likely that future hurricanes and tropical storms in York County will only occur from mid-July through early October; a period of less than three months out of the year.

Back to Agenda

HAZARD #4 – WILDFIRE (URBAN INTERFACE AND WILD FIRE)

1. Definition

Wildland fires are defined as those fires that burn vegetative cover: grass, brush, timer, or slash (Clayton 1985). Wildfire is a natural phenomenon initially finding its origin in lightning. However, humans have become the greatest cause of fires in Maine. Wildland urban interface fires are created where homes meet with highly volatile forest fuels.

2. Location

Despite being a heavily forested area, York County has not experienced major wildfire events since 1947. The Maine Forest Service maintains data on wildfires throughout the state, and reports on the number of wildfires and amount of acreage burned by year for every town in York County. While these data provide a good base for understanding the scale of wildfires in the county, they are not necessarily comprehensive, as they only represent fires that are reported to the Forest Service. However, the Forest Service does estimate that about 90 percent of fires are in fact reported.

The table below documents wildfires in York County for the years 2010 through 2015. Between 2010 and 2015, there were 234 wildfires in York County with a total number of 155 acres burned. The Maine Forest Service no longer collects data by town; only by county. Similar to previous years' reports, the number of acres burned seems to be underreported, as many towns show a large number of incidents, but zero acres burned. The three most common causes of wildfire in York County are railroad, debris and machines.

2010-2015 York County Forest Fire Statistics (Acres burned)

Fire County	CAUSE	# of Fires	2010	2011	2012	2013	2014	2015
YORK	CAMPFIRE	20	1.65	1.1	10.8	2.6	7.25	0.7
YORK	CHILDREN	14	0.6	0.51	0.6	0.75	0.45	1.2
YORK	DEBRIS	48	5.66	1.56	8.45	6.15	3.12	
YORK	DEBRIS BURN	9						5.35
YORK	EQUIPMENT USE	4						1.05
YORK	INCEN	21	2.56	1.12	1.5	0.34	0.01	
YORK	LIGHTNING	11		0.1		0.28	0.13	7.7
YORK	MACH	27	0.34	1.17	7.2	1.27	6	
YORK	MISC	19	2.9	0.5	10.82	8.5	1.1	
YORK	MISCELLANEOUS	3						1.8
YORK	POWERLINE	1						1.5
YORK	RAILROAD	50	0.16	1.06			32.71	0.1
YORK	SMOKE	6		0.5	3	0.9	0.3	
YORK	STRUCTURE	1						0.2

Source: Maine Forest Service

Back to Agenda

Wildfires are unpredictable events, and often depend on a mixture of weather conditions, human irresponsibility, and bad luck; a lack of past wildfire damage does not necessarily predict future immunity. In 2002, there were large fires in Biddeford and Arundel. In the summer of 2002, following an extended drought, Biddeford had two large fires, each of which claimed about 10 acres, and Arundel had a 20-acre fire, the largest in the county in many years.

3. Extent

Looking further back, the wildfire of record in York County were the fires of 1947 that burned over 200,000 acres in Maine, including large sections of York County, with the worst damage occurring in Shapleigh, Waterboro, Hollis, and Dayton. The fires consumed large areas of forestland as well as many homes and public buildings. This event was the product of a sustained drought and could certainly be repeated if weather conditions were similar.

Locations of Areas of Risks

Typically, the type of fire that occurs is urban, concentrated in the county's more densely populated areas, especially Old Orchard Beach and Kittery. Heavily settled and developed areas raises the risk of fire damage substantially, as the value of properties is much higher in built-up areas than in rural areas. A related issue is that of the risk posed by wildfires to the county's key public facilities (airports, communication towers, dams, EMS locations, hospitals, and schools). Many of these facilities are located in mostly rural, forested areas, and the proximity of such facilities to wildfire fuel sources poses a concern for exposure to future wildfires if drought conditions were persistent.

4. Probability of Future Occurrences

While parts of York County are located in a heavily forested area, its recent history shows that major wildfires have not been a problem. The typical recent wildfire in York County has burned less than 10 acres and caused relatively little property damage. By comparison, the last major wildfire was the one of record in 1947, more than sixty years ago, so at this time, the probability is low. However, the probability of wildland/urban risk depends on conditions such as prolonged drought. Since 2016 has been an extremely dry year in York County, drought conditions are being monitored very closely.

Due to the devastation of past wildfires, the dense forest cover of York County and the high number of structures built in the wild land-urban interface, the county's future wildfire risk must therefore be seen as elevated to at least a moderate level.

Back to Agenda

3. ASSESSING VULNERABILITY

7. Assessing Vulnerability: Overview	
Requirement §201.6(c)(2)(ii): (The risk assessment shall include a) description of the jurisdiction's vulnerability to the hazards described in paragraph (c)(2)(i) of this section. This description shall include an overall summary of each hazard and its impact on the community.	
Elements	**A.** Does the new or updated plan include An overall summary description of the jurisdiction's vulnerability to each hazard?
	B. Does the new or updated plan address the impact of each hazard on the jurisdiction?

Vulnerability of York County to each hazard.

Flooding. York County can expect to experience flooding of some roadways and infrastructure every year. The coastal section of the county is at most risk with the dual threat of both heavy rainfall events and storm surge/sea level rise off the ocean.

Severe Winter Storms. Using history as the predictor of future severe winter storms, York County is assumed to be at risk for about seven such storms each winter. More importantly, the county should expect one especially damaging storm at least once every 10 years, similar to the ice storm of January 5, 1998 and December 2008. The greatest amount of future severe winter storms can be expected to occur in December or January, with significant numbers also expected in February, and March.

Severe Summer Storms. The entire County is vulnerable to severe summer storm damage, with the coastline having added vulnerability due to storm surges and coastal storms. Hail and thunderstorms occurred most frequently, followed by lightning, strong winds, and flooding. Severe summer storm events often cause property damage. 51% of the summer storm events reported since 1993 resulted in property damage. The Patriot's Day Storm that affected the entire County caused the most damage ($9.5 million). Of all the summer storm events that resulted in property damage, flooding is the most costly, followed by winds, storm surge and lightning.

Wildfire. York County is located in a heavily forested area. While its recent history shows that major wildfires have not been a problem looking further back into the past, York County has in fact been affected by wildfires. The fires of 1947 burned over 200,000 acres in Maine, including large sections of York County. This event was the product of a sustained drought and could certainly be repeated if another drought occurs.

Due to the devastation of past wildfires, the dense forest cover of York County and the high number of structures built in the wildland-urban interface, the entire region's future wildfire risk must therefore be seen as a low probability but with a high impact if it did occur.

Back to Agenda

Impacts of each hazard on York County.

Flooding. The typical damages resulting from flooding in York County include extensive damage to roads and their respective drainage systems. Historically, flood damages have included partial or complete road washouts and severe erosion of roadside ditches, resulting in damages to town and personal vehicles. These damages can absorb the municipal road budget for an entire year and does happen in several towns every year. This situation occurred after Tropical Storm Irene hit York County in August of 2011. DR-4032 was declared to assist with the damages totaling $2,437,188 to roads, bridges and structures which resulted from the flooding created by the excessive wind and rain.

Severe flooding, such as occurred with the Patriot's Day storm in 2007, can cause loss of life, property damage, disruption of communications, transportation, electric service and community services, crop and livestock damage, health issues from contaminated water supplies, and loss and interruption of business. Ironically, fire fighting efforts can be compromised if fire fighters and equipment are responding to a flood emergency.

Severe Winter Storms. The damage impacts of sever winter storms include road closures and loss of electrical power and communication services for extended periods of time. These conditions can impede the response time of ambulance, fire, police and other emergency services, especially to remote or isolated residents. If severe and prolonged enough, it could result in loss of income to businesses and individuals due to business closures. Roof collapses, both residential and commercial, are rare but they can occur when snow loads become extreme.

Loss of electrical power and communication services can occur when utility lines yield under the weight of ice and snow. These conditions can impede the response time of ambulance, fire, police and other emergency services, especially to remote or isolated residents.

Both DR-4108 and DR-4208 were disaster declarations to assist the municipalities with the excess costs associated with the severe winter storms. The storms created a tremendous amount of snow debris which had to be cleared from highways, roads, businesses and residences. The snow removal costs combined with the extra expenses for sand and salt, additional emergency and municipal personnel, as well as the other extra storm related costs, creates budget short falls for Maine cities and towns. Although these storms are not frequent, they do have a substantial impact on York County communities.

Severe Summer Storms. The damages from summer storms typically involve the washout of roads, coastal erosion, downed utility lines, and debris clearance. If severe enough, this could result in the loss of income to businesses and individuals due to business closures.

Wildfire. The impacts of wildfires could include the destruction of woodland forest stands of trees and other vegetation, which when located on steep slopes and/or near watercourses can increase erosion and pollution to water bodies. Loss of income from wildfires can occur for private property owners with the state tree growth program and for the logging and paper industries. In York County nearly all structures are located in the wildland/urban interface and can be damaged and destroyed from wildfires. Temporary road closures may be warranted when wildfires are closed to roadways or cross over roadways.

Back to Agenda

Repetitive Loss Properties

8. Assessing Vulnerability: Addressing Repetitive Loss Properties	
Requirement §201.6(c)(2)(ii): (The risk assessment) must also address National Flood Insurance Program (NFIP) insured structures that have been repetitively damaged (by) floods.	
Element	**A.** Does the new or updated plan describe vulnerability in terms of the types and numbers of repetitive loss properties located in the identified hazard areas?

Repetitive Loss Properties

The NFIP maintains a file of repetitive loss properties; properties that have experienced more than one flood loss. The FEMA definition of Repetitive Loss Property: A repetitive loss property is a structure covered by a contract for flood insurance made available under the NFIP that:

(a) Has incurred flood-related damage on 2 occasions, in which the cost of the repair, on average, equaled or exceeded 25 percent of the market value of the structure at the time of each flood event; and

(b) At the time of the second incidence of flood-related damage, the contract for flood insurance contains increased cost of compliance coverage.

The following table is a summary of the repetitive loss properties by each municipality.

Back to Agenda

York County Repetitive Loss Properties 2015						
City or Town	Residential		Non-Residential		Total Properties	Total Losses
	# of properties	# of losses	# of properties	# of losses		
ACTON	2	8	0	0	2	8
ARUNDEL	1	2	0	0	1	2
BERWICK	1	2	1	2	2	4
BIDDEFORD	4	8	0	0	4	8
BUXTON	1	2	0	0	1	2
DAYTON	1	2	0	0	1	2
KENNEBUNK	18	47	2	5	20	52
KENNEBUNKPORT	7	15	3	16	10	31
KITTERY	1	2	1	3	2	5
NORTH BERWICK	1	3	0	0	1	3
OGUNQUIT	3	6	5	16	8	22
OLD ORCHARD BEACH	7	18	1	2	8	20
SACO	10	25	1	3	11	28
SANFORD	2	5	1	3	3	8
SOUTH BERWICK	3	10	0	0	3	10
WELLS	15	37	0	0	15	37
YORK	15	39	11	27	26	66
TOTALS:	**92**	**231**	**26**	**77**	**118**	**308**

Identifying Structures

9. Assessing Vulnerability: Identifying Structures	
Requirement §201.6(c)(2)(ii)(A): The plan should describe vulnerability in terms of the types and numbers of existing and future buildings, infrastructure, and critical facilities located in the identified hazard area...	
Elements	**A.** Does the new or updated plan describe vulnerability in terms of the types and numbers of existing buildings, infrastructure, and critical facilities located in the identified hazard areas?
	B. Does the new or updated plan describe vulnerability in terms of the types and numbers of future buildings, infrastructure, and critical facilities located in the identified hazard areas?

A. Vulnerability of existing buildings, infrastructure, and critical facilities

Back to Agenda

Flooding:

- **Buildings.** Areas near the coast and immediately surrounding waterbodies are the most vulnerable. In particular, the Camp Ellis neighborhood in Saco, which has lost 30 structures and 2 entire streets in the last 100 years due to coastal erosion. Shore Road in York and Beach Avenue in Kennebunk have had to build new seawalls to replace ones destroyed during severe coastal flooding over the last few years.
- **Infrastructure.** Roads and their associated storm drainage systems are the most vulnerable category of infrastructure. Much of the county is rural in nature, and is served by a network of rural roads that do not have proper storm drainage systems. These roads are very vulnerable to flooding caused by heavy downpours and/or the blockage of drainage systems by ice or debris.
- **Critical facilities**. Due to the varied topography within the County and the availability of higher elevation sites within all municipalities, nearly all critical facility structures are located outside of floodplains. Possible exceptions include some wastewater treatment plants, due to the need to locate these facilities at lower elevations.

Severe Winter storms:

- **Buildings.** All buildings in York County are vulnerable to winter storms. Damages can include burst water pipes during power outages, interior water damages due to ice dams forming on roofs, and occasionally, roof collapses due to heavy snow loads.
- **Infrastructure.** Roads and their associated storm drainage systems are the most vulnerable category of infrastructure. They can become temporarily blocked due to heavy snow falling over a short period of time, or ice which can build on their surfaces. Water main breaks due to cold weather can also occur. Roads and their storm drainage systems can become blocked due to heavy snow and ice and debris such as tree limbs.
- **Critical facilities**. All critical facilities in York County are vulnerable to winter storms in the same manner that individual buildings are vulnerable. However, some of the critical facilities throughout the County have back-up generator systems which allow heating systems to continue operating during a power outage.

Severe Summer storms:

- **Buildings.** Buildings are not that vulnerable to summer storm damage except for tornados and hurricanes. Most of the damage that does occur during a summer storm is from strong winds that knock down branches and trees.
- **Infrastructure.** Roads are frequently blocked during and after severe summer storms due to strong winds, lightning strikes, hurricanes or tornados that knock down branches, limbs, and trees across roadways. Electric and communication

Back to Agenda

infrastructure are also vulnerable to power outages due to strong winds, lightning strikes, or tornados.

- **Critical facilities**. All critical facilities in York County are most vulnerable to power outages; however, some of the critical facilities throughout the County have back-up generator systems which allow systems to continue operating during a power outage.

Wildfire

- **Buildings.** Buildings are most at risk from wildfires in the areas where denser development is encroaching into forested areas, the wildland/urban interface. The towns in this area and hence at greatest risk are Buxton, Hollis, Limerick, Waterboro, Dayton, Lyman, Alfred, and Arundel,
- **Infrastructure.** While fires would not necessarily damage roads, it could hamper the use of critical rural roads for emergency vehicles and the general public. Rural power lines, as well as high concentration of power lines within urban areas would also be vulnerable either to wildfires or wildfire/urban interface.
- **Critical Facilities.** Many critical facilities are often located within or near urban areas which would make them very vulnerable to damage during a wildfire/urban interface fire. Throughout the rural parts of the County there are schools, fire/rescue departments, and other critical facilities that would be vulnerable to wildfire.

B. Vulnerability of future buildings, infrastructure, and critical facilities

Flooding:

- **Buildings.** All of the municipalities in York County are in the flood insurance program, and 90% have municipal shoreland zoning ordinances that prohibit the construction of residential, commercial and industrial structures in floodplains. Unlike other parts of the country, The FEMA floodplain maps for York County are in the process of being revised with the intent to prevent future development from being built in areas vulnerable to flooding.
- **Infrastructure.** Future roads and their associated storm drainage systems would seem to be the most likely category of infrastructure that would be vulnerable to flooding. However, State and local road construction standards generally ensure that new roads are properly constructed with adequate storm drainage systems. Most if not all roads in the public domain must be designed by a registered professional engineer. Therefore, flooding of future roads is not likely to be a serious issue in York County.
- **Critical facilities**. Because of the requirements of the Flood Insurance Program, as well as shoreland zoning requirements and a greater awareness of flooding in all communities, future critical facilities will continue to be located outside floodplain areas. The exception may be wastewater treatment plants, due to the need to locate these facilities at lower elevations.

Back to Agenda

Severe Winter storms:

- **Buildings.** New buildings in York County will be less vulnerable to winter storms. Damages may include burst water pipes, but many newer buildings will be better insulated than older ones, thus being better able to retain heat during longer periods of time when there is a power outage. There will be less ~~i~~ interior water damage due to ice dams forming on roofs because the roofs of newer buildings generally are properly vented, which allows the roofs to remain cold. Roof collapses due to heavy snow loads will be very rare because newer roofs are designed to withstand heavy snow loads.
- **Infrastructure.** Roads will continue to be the most vulnerable category of infrastructure. New roads can be just as easily blocked on a temporary basis due to heavy snowfall, ice building up on the road surface, and debris such as tree limbs accumulating on the road surface during a storm event. Widespread power outages will continue to be a problem during major ice storms.
- **Critical facilities**. Future critical facilities in York County will be vulnerable to winter storms in the same manner that individual buildings will be vulnerable. However, some of them will have back-up generator systems which will allow heating systems to continue operating during a power outage."

Severe Summer storms:

- **Buildings.** Buildings likely to receive the most serious damage are those located closer to the coast due to hurricanes and tropical storms. Buildings in interior parts of the county are not that vulnerable to summer storm damage except for tornados. The most frequent damage likely to occur during a summer storm is from strong winds that knock down branches and trees.
- **Infrastructure.** There will continue to be roads blocked during and after severe summer storms due to strong winds, lightning strikes, or tornados that knock down branches, limbs, and trees across roadways. Roads and their associated storm drainage systems, and lines are the most vulnerable categories of infrastructure from hurricanes and tropical storms. Power outages due to strong winds, lightning strikes, hurricanes or tornados will continue to be problematic.
- **Critical facilities**. All critical facilities in York County are most vulnerable to power outages, however, some of the critical facilities throughout the County will have back-up generator systems which allow systems to continue operating during a power outage.

Wildfire

- **Buildings.** York County's vast acreage of forest will continue to be cause for concern, continued growth in the region will create increased risks for wildland/urban interface. Another concern is the aging population particularly in rural areas that depend on volunteer fire departments. Recruiting new volunteers is becoming increasingly more difficult.

Back to Agenda

- **Infrastructure.** As long as there is the potential for wildfires, accessible roads will always be needed. As long as power lines continue to be built above ground they will remain vulnerable to damage due to wildfires.
- **Critical Facilities.** York County's vast acreage of forest will continue to be cause for concern. Critical facilities will continue to be built as the region continues to develop and grow, and continued growth in the region will create increased risks for wildland/urban interface

Estimating Potential Losses

10. Assessing Vulnerability: Estimating Potential Losses	
Requirement §201.6(c)(2)(ii)(B): (The plan should describe vulnerability in terms of an) estimate of the potential dollar losses to vulnerable structures identified in paragraph (c)(2)(ii)(A) of this section and a description of the methodology used to prepare the estimate…	
Elements	**A.** Does the new or updated plan estimate potential dollar losses to vulnerable structures?
	B. Does the new or updated plan describe the methodology used to prepare the estimate?

This section assesses the vulnerability of York County to future disasters, as well as the potential for losses resulting from disasters. Since this is a regional plan, specific inventories of the *number, type* and *value* of buildings in hazard areas in each municipality have not been calculated. Instead, the planning team has made estimates on these factors for the purposes of understanding the potential losses from different types of hazard events.

As an outgrowth of this plan the York County EMA hopes to work with local EMA directors to conduct detailed inventories of structures at risk. In fact, Action 1.1.1 in the Implementation Plan (a high-priority action) reads: "Conduct detailed local inventories of hazard-prone areas."

Location of Critical Resources

Ensuring that key public buildings and infrastructure remain intact during disasters gives a place the ability to mitigate against potential damage from hazards. As a county with more than 198,934 people living in 29 different cities and towns, York County has a substantial network of public buildings and infrastructure to maintain.

This section discusses the location of these critical resources. Data on hospitals, EMS locations, emergency shelters, and infrastructure comes from either the State of Maine Office of Geographic Information Systems (OGIS) or from information collected locally. Many different types of public structures must be protected in case of disasters. These include emergency shelters, hospitals, EMS facilities, public works facilities, prisons, and municipal buildings. In addition, many types of public infrastructure must also be protected from disasters, including roads, bridges, electrical and communication lines, railroads, and airports. The locations and risk factors for each of these building and infrastructure types are described below.

Back to Agenda

Emergency shelters

York County EMA records list a total of 77 emergency shelters in the county, with a total capacity of 10,258 persons. These facilities are located in many different types of buildings, including schools, hospitals, fire stations, commercial buildings and private businesses. Only one of the county's 29 cities and towns—Kennebunkport—lacks an emergency shelter but this town shares shelter facilities with neighboring Kennebunk, and Kennebunk's four shelters have capacity for more than 1,000 people.

Comparing this total of 10,258 shelter slots with the peak seasonal population in York County of about 305,000 people, there is one shelter slot for approximately each 30 people in the area. Some towns offer better coverage than others—South Berwick has 1,410 shelter slots for its peak population of about 6,800, or one slot per nine people. On the other end of the scale, Shapleigh has just 30 slots for its peak population of 5,400, or one for each 180 people.

One concern with shelters is the presence of backup generators to provide heat and electricity during severe winter storm events. Severe winter storms in Maine often result in the widespread loss of electricity for several days. Therefore, having backup generators to provide heat for displaced families is critical during such storms. The York County EMA lists just 20 shelters in the county that have backup generators, and these facilities can provide temporary shelter for up to 2,331 residents. Comparing this figure with the year-round population of about 198,934 people, there is just one winter shelter slot per 85 residents. Another concern is that 18 of the county's 29 cities and towns do not have any shelters with generators. Clearly, housing displaced persons during times of extended power outages in the winter is a concern for York County.

Back to Agenda

The table below displays town-by-town emergency shelter data for York County.

Emergency Shelters by Town

	All Shelters				With Generators			
	Peak Population	No.	Capacity	People/ Shelter Slot	Winter Population	No.	Capacity	People/ Shelter Slot
Acton	6,105	1	120	51	2,145	0	0	na
Alfred	2,907	3	295	10	2,497	2	145	17
Arundel	4,111	2	131	31	3,571	0	0	na
Berwick	6,703	5	737	9	6,353	1	40	159
Biddeford	24,042	5	955	25	20,942	0	0	na
Buxton	7,742	3	623	12	7,452	3	623	12
Cornish	1,739	2	100	17	1,269	0	0	na
Dayton	1,805	1	70	26	1,805	0	0	na
Eliot	6,314	2	213	30	5,954	0	0	na
Hollis	4,274	1	112	38	4,114	0	0	na
Kennebunk	14,836	4	1,025	14	10,476	4	1,025	10
Kennebunkport	11,230	1	52	216	3,720	1	52	72
Kittery	11,093	3	315	35	9,543	1	150	64
Lebanon	9,953	3	190	52	5,083	1	100	51
Limerick	3,320	1	60	55	2,240	0	0	na
Limington	3,883	2	142	27	3,403	0	0	na
Lyman	5,715	1	100	57	3,795	0	0	na
Newfield	2,738	2	50	55	1,328	1	13	102
North Berwick	4,613	2	280	16	4,293	0	0	na
Ogunquit	10,136	1	100	101	1,226	1	50	25
Old Orchard Beach	37,036	2	297	125	8,856	0	0	na
Parsonsfield	3,124	2	92	34	1,584	0	0	na
Saco	20,222	5	454	45	16,822	2	53	317
Sanford	23,606	3	520	45	20,806	0	0	na
Shapleigh	5,386	1	30	180	2,326	0	0	na
South Berwick	6,781	6	1,410	5	6,671	2	60	111
Waterboro	8,564	5	642	13	6,214	0	0	na
Wells	29,140	3	437	67	9,400	0	0	na
York	28,354	6	808	35	12,854	2	72	179
County Total	**305,472**	**78**	**10,360**	**29**	**186,742**	**21**	**2,383**	**78**

Source: York County EMA

Hospitals

There are three hospitals in York County: Southern Maine Healthcare Biddeford in Biddeford, Southern Maine Healthcare Sanford in Sanford, and York Hospital in York Village. All three of these hospitals are located in built-up locations that are accessible to major transportation routes: Southern Maine Healthcare Biddeford and York Hospital are both near the Maine Turnpike and Southern Maine Healthcare Sanford is located in downtown Sanford.

These hospitals have a total of ~~265~~ 281 acute care beds: 215 at Southern Maine Healthcare Biddeford and 66 at York Hospital. Compared with the county's population, this only represents one bed for about every 680 residents. However, there are several more hospitals located in close proximity to York County's boundaries, including Maine Medical Center and Mercy Hospital in Portland, Frisbie Memorial Hospital in Rochester, New Hampshire, and Portsmouth Regional Hospital in Portsmouth, New Hampshire.

Back to Agenda

EMS Locations
Most York County towns have at least one fire or rescue facility, and many have multiple locations. In all, 28 of the county's 29 cities and towns have EMS units; Parsonsfield does not have one. This sparsely populated towns is served by units from neighboring towns, Limerick, Cornish and Porter.

There are a total of 57 fire and/or rescue stations units in York County. In addition, there are six fire/rescue units located within 1 mile of the county's borders in either Cumberland or Oxford counties.

Water and Wastewater Treatment Plants
Of the 29 cities and towns in York County, 15 have public sewer and water service. An additional five towns have public water service but no public sewer systems, bringing the total of towns with public water service to 20. The remaining nine towns have neither public water nor public sewer services. The table below lists towns by category.

Water and Sewer		Water Only	No Public Water or Sewer
Berwick	Sanford	Alfred	Acton
Biddeford	South Berwick	Arundel	Buxton
Eliot	Wells	Cornish	Dayton
Kennebunk	York	Parsonsfield	Hollis
Kennebunkport		Waterboro	Lebanon
Kittery			Limington
Limerick			Lyman
North Berwick			Newfield
Ogunquit			Shapleigh
Old Orchard Beach			
Saco			

Among the 15 cities and towns served by sewer, 14 have their own wastewater treatment facilities, while the Town of Eliot is served by the facility in Kittery. For the 20 cities and towns with public water supplies, there are just 12 water treatment plants. Many cities or towns are served by regional water utilities, such as the Biddeford & Saco Water Company (Biddeford, Old Orchard Beach, Saco) and the KKW Water District (Arundel, Kennebunk, Kennebunkport, Ogunquit, Wells).

Other Utilities

- There are a total of 331.38 miles of electrical transmission lines in York County with a total estimated value of $155.9 million. As shown in the table to the right, there are three different voltage levels of the lines in the county: 35, 115, and 345 kilovolts (KV).

Electrical Transmission Lines in York County

Line Type	Miles	Value per Mile	Total Value
35 KV	149.19	$200,000	$29,837,700
115 KV	112.26	$500,000	$56,131,000
345 KV	69.93	$1,000,000	$69,928,900
Total	**331.38**		**$155,897,600**

Source: Central Maine Power Company

Back to Agenda

- Data regarding the inventory of telephone transmission lines were not disclosed by Fairpoint, so the total line length is assumed to be the same as the electrical lines for the purposes of this plan.

- A natural gas pipeline traverses the county from Saco to Eliot.

- In addition to these lines, there are 44 communication towers in the county, which include TV towers, radio towers, and cellular towers. These towers are shown in the map to the right:

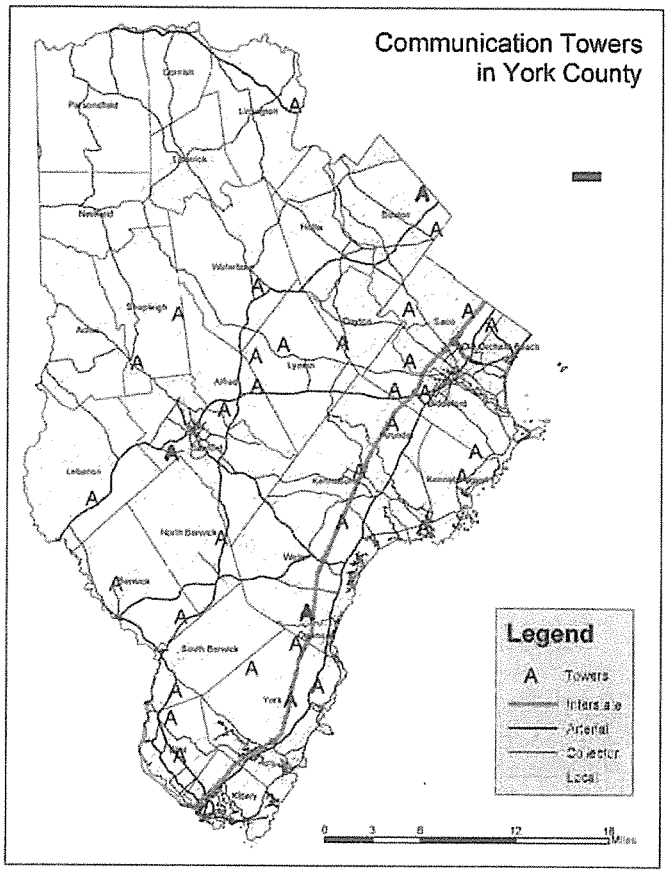

Back to Agenda

Transportation Network

York County's transportation network includes roads, bridges, airports, rail lines and waterways. There are no major port facilities in the county, but there are major ports just beyond the county's borders, in Portland, Maine and Portsmouth, New Hampshire. Though none of the airports in York County have scheduled commercial air service, the county is served by Portland International Jetport in South Portland and Pease International Tradeport in Portsmouth, New Hampshire. All of these facilities are located within 10 miles of the York County border.

In total, there are 3,782 miles of roadway in York County. Of this total 2,119 (56%) are paved, and 1,663 (44%) are unpaved. Most public roads (86.5%) are paved but most private roads (95%) are not.

The county's road inventory by town is shown below:

York County Road Inventory

	Public Roads (mileage)			Private Roads (mileage)			Total Roads (mileage)		
Town	Total	Paved	Unpaved	Total	Paved	Unpaved	Total	Paved	Unpaved
Acton	74.3	56.1	18.2	38.1	1.9	36.2	112.4	58.1	54.4
Alfred	59.0	44.9	14.1	34.7	1.7	32.9	93.7	46.6	47.1
Arundel	57.8	55.2	2.5	36.1	1.8	34.3	93.9	57.0	36.8
Berwick	71.5	62.9	8.7	45.9	2.3	43.6	117.5	65.2	52.3
Biddeford	118.4	111.4	6.9	43.2	2.2	41.0	161.5	113.6	47.9
Buxton	111.6	100.3	11.3	37.7	1.9	35.8	149.3	102.2	47.2
Cornish	40.4	32.6	7.8	31.8	1.6	30.3	72.2	34.2	38.0
Dayton	42.1	38.8	3.2	27.2	1.4	25.9	69.3	40.2	29.1
Eliot	51.1	50.0	1.1	42.7	2.1	40.6	93.8	52.2	41.6
Hollis	74.5	60.4	14.1	51.2	2.6	48.7	125.7	63.0	62.8
Kennebunk	112.6	106.7	6.0	56.7	2.8	53.9	169.4	109.5	59.8
Kennebunkport	47.0	42.9	4.0	31.7	1.6	30.1	78.7	44.5	34.2
Kittery	80.4	77.9	2.5	34.0	1.7	32.3	114.4	79.6	34.8
Lebanon	93.6	72.6	21.0	51.7	2.6	49.1	145.3	75.2	70.1
Limerick	52.8	43.0	9.8	55.7	2.8	52.9	108.5	45.8	62.7
Limington	75.0	53.6	21.4	71.5	3.6	67.9	146.5	57.2	89.3
Lyman	70.4	50.3	20.1	69.7	3.5	66.2	140.1	53.8	86.3
Newfield	49.1	41.0	8.2	50.9	2.5	48.3	100.0	43.5	56.5
North Berwick	81.3	66.4	14.8	35.0	1.8	33.3	116.3	68.2	48.1
Ogunquit	24.6	23.4	1.2	12.4	0.6	11.8	37.0	24.0	13.0
Old Orchard Beach	52.0	50.0	1.9	14.3	0.7	13.6	66.3	50.8	15.5
Parsonsfield	85.0	55.8	29.2	85.3	4.3	81.0	170.3	60.1	110.2
Saco	135.0	133.7	1.2	32.7	1.6	31.0	167.6	135.4	32.3
Sanford	171.7	159.0	12.7	67.5	3.4	64.1	239.2	162.4	76.8
Shapleigh	70.2	46.5	23.7	61.5	3.1	58.5	131.8	49.6	82.2
South Berwick	71.7	58.9	12.7	48.1	2.4	45.6	119.7	61.3	58.4
Waterboro	91.1	68.6	22.5	125.9	6.3	119.6	217.0	74.9	142.1
Wells	148.0	143.2	4.8	43.7	2.2	41.5	191.7	145.4	46.3
York	154.1	141.2	12.8	78.3	3.9	74.4	232.4	145.1	87.3
TOTAL	2,366.2	2,047.8	318.5	1,415.3	70.8	1,344.6	3,781.6	2,118.5	1,663.1
% of Total		86.5%	13.5%		5.0%	95.0%		56.0%	44.0%

Source: FEMA, Maine DOT; SMPDC

Back to Agenda

Major road facilities in York County include Interstate 95 (Maine Turnpike), which runs along the coast, U.S. Route 1, which parallels I-95, and U.S. Route 202, which runs northeasterly through the heart of the county from Lebanon to Buxton. In addition, several major state highways serve the county, including:

- Route 4 (Alfred to South Berwick)
- Route 9 (Wells to Berwick)
- Route 25 (Limington to Parsonsfield)
- Route 109 (Wells to Acton)
- Route 111 (Biddeford to Alfred)
- Route 236 (Kittery to Berwick)

The Pan Am Rail railroad line runs north to south through York County. It is primarily a freight line, but it also carries the Amtrak Downeaster line, which connects Portland to Boston. There are three Amtrak stations on this line in York County: year-round stations in Saco and Wells and a seasonal (May to October) station in Old Orchard Beach. Finally, York County contains six airports, two of which are public (Biddeford, Sanford) and four of which are private (Acton, Eliot, Limington, South Berwick). As mentioned above, none of these airports offer scheduled commercial service.

There are a number of bus transit lines located in York County:

- The Biddeford/Saco/Old Orchard Beach Shuttlebus operates four lines: two local routes within the three towns, a local route to Portland, and an express commuter bus to Portland. This program also operates a summer trolley service within Old Orchard Beach.
- York County Community Action Corporation (YCCAC) operates two lines
    - Sanford Transit, a line within the town between Springvale and South Sanford.
    - Wheels to Access Vocation and Education (WAVE), which runs from Springvale to Wells and is designed to serve students and working people who do not have means to get to jobs.
- COAST (Cooperative Alliance for Seacoast Transportation) provides service between Berwick and the Dover and Somersworth, NH areas.
- The Coastal Explorer system includes several local seasonal trolley lines between Kennebunk and York.

In addition to these regularly scheduled transit services, YCCAC operates York County Community Transportation, a fleet of buses and vans that serve senior citizens, low-income populations and special needs populations in the region. This program has had an agreement in place for several years with YCEMA to provide evacuation assistance during and after disaster events.

The map on the next page shows the county's transportation network.

Back to Agenda

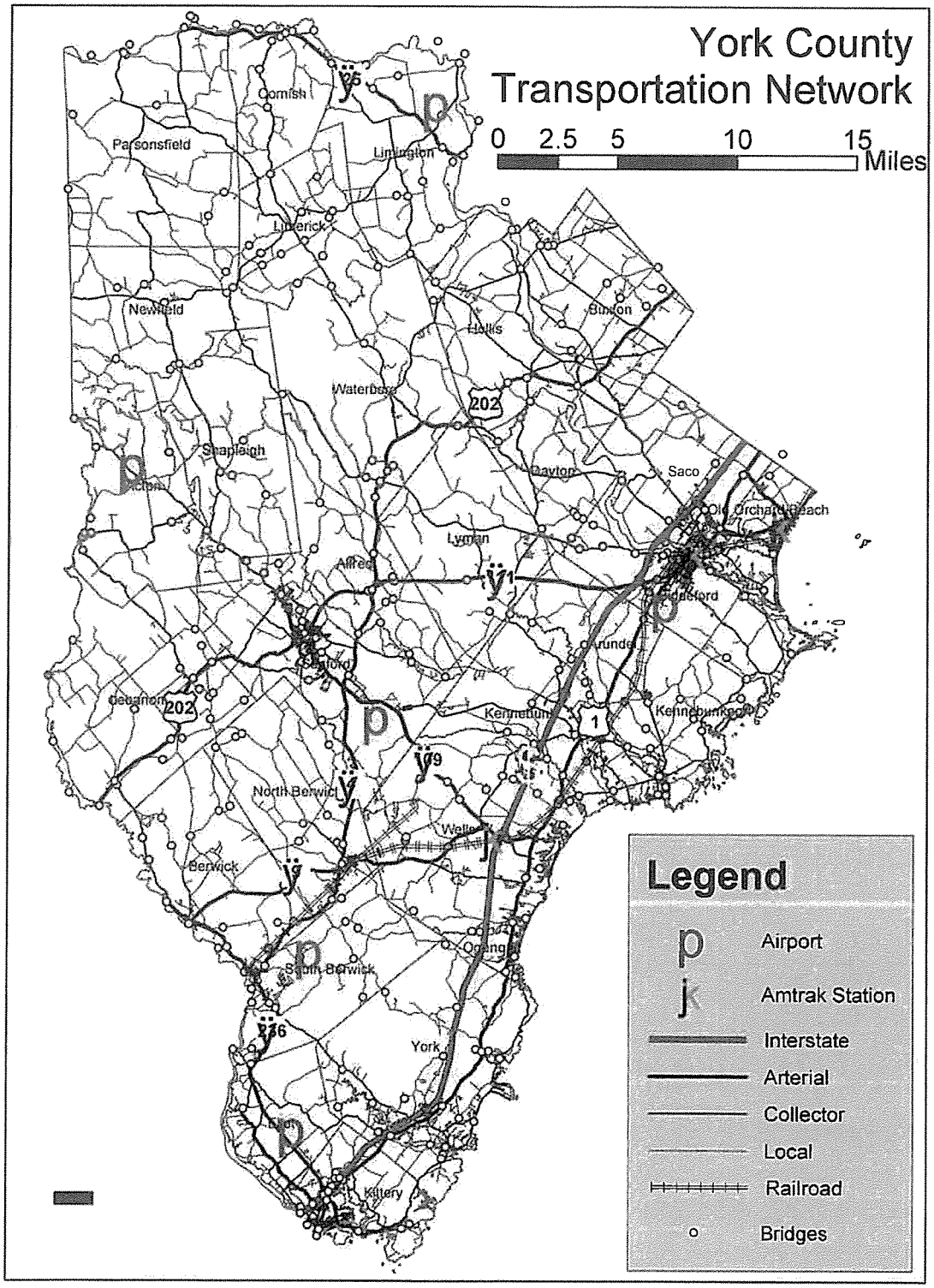

Back to Agenda

Of the roads in the county's network, 64.8 miles fall within the 100-year floodplain, as identified by FEMA, representing 1.7% of the county's total road inventory. In linear feet terms, this comes to about 342,300 feet of roadway. These segments are at increased risk for flooding due to their locations. The inventory of roads in the floodplain by town is as follows:

Roadway Miles in 100-Year Floodplain by Town

	Miles in Floodplain			Total Miles			% in Floodplain		
	Paved	Unpaved	Total	Paved	Unpaved	Total	Paved	Unpaved	Total
Acton	1.3	0.5	1.8	58.1	54.4	112.4	2.2%	1.0%	1.6%
Alfred	1.3	0.7	2.0	46.6	47.1	93.7	2.8%	1.5%	2.1%
Arundel	1.1	0.0	1.1	57.0	36.8	93.9	2.0%	0.0%	1.2%
Berwick	2.1	0.4	2.6	65.2	52.3	117.5	3.3%	0.8%	2.2%
Biddeford	4.1	0.1	4.2	113.6	47.9	161.5	3.6%	0.3%	2.6%
Buxton	3.4	0.8	4.3	102.2	47.2	149.3	3.4%	1.8%	2.9%
Cornish	0.5	0.2	0.7	34.2	38.0	72.2	1.5%	0.6%	1.0%
Dayton	2.4	0.2	2.5	40.2	29.1	69.3	5.9%	0.5%	3.6%
Eliot	1.5	0.2	1.7	52.2	41.6	93.8	2.9%	0.6%	1.9%
Hollis	1.2	0.2	1.4	63.0	62.8	125.7	1.9%	0.3%	1.1%
Kennebunk	2.8	0.5	3.3	109.5	59.8	169.4	2.6%	0.8%	1.9%
Kennebunkport	1.3	0.0	1.3	44.5	34.2	78.7	3.0%	0.0%	1.7%
Kittery	3.4	0.3	3.7	79.6	34.8	114.4	4.3%	0.9%	3.3%
Lebanon	1.1	0.8	1.9	75.2	70.1	145.3	1.5%	1.2%	1.3%
Limerick	0.1	0.0	0.1	45.8	62.7	108.5	0.1%	0.0%	0.0%
Limington	1.9	0.7	2.6	57.2	89.3	146.5	3.3%	0.7%	1.7%
Lyman	0.8	0.6	1.4	53.8	86.3	140.1	1.5%	0.7%	1.0%
Newfield	0.0	0.0	0.0	43.5	56.5	100.0	0.1%	0.0%	0.0%
North Berwick	0.7	0.2	0.9	68.2	48.1	116.3	1.1%	0.4%	0.8%
Ogunquit	0.7	0.0	0.7	24.0	13.0	37.0	3.0%	0.0%	2.0%
Old Orchard Beach	3.3	0.2	3.5	50.8	15.5	66.3	6.4%	1.5%	5.3%
Parsonsfield	0.4	0.2	0.6	60.1	110.2	170.3	0.7%	0.1%	0.3%
Saco	5.2	0.0	5.2	135.4	32.3	167.6	3.8%	0.0%	3.1%
Sanford	2.1	0.4	2.5	162.4	76.8	239.2	1.3%	0.6%	1.1%
Shapleigh	0.1	0.0	0.1	49.6	82.2	131.8	0.1%	0.0%	0.1%
South Berwick	2.4	0.2	2.6	61.3	58.4	119.7	3.9%	0.4%	2.2%
Waterboro	1.2	0.1	1.3	74.9	142.1	217.0	1.6%	0.0%	0.6%
Wells	4.7	0.1	4.8	145.4	46.3	191.7	3.2%	0.2%	2.5%
York	5.7	0.3	6.0	145.1	87.3	232.4	3.9%	0.4%	2.6%
Total	**56.8**	**8.0**	**64.8**	**2,118.5**	**1,663.1**	**3,781.6**	**2.7%**	**0.5%**	**1.7%**

Source: FEMA; Maine DOT; SMPDC

Back to Agenda

Analyzing Development Trends

11. Assessing Vulnerability: Analyzing Development Trends	
Requirement §201.6(c)(2)(ii)(C): (The plan should describe vulnerability in terms of) providing a general description of land uses and development trends within the community so that mitigation options can be considered in future land use descriptions.	
Element	**A.** Does the new or updated plan describe land uses and development trends?

Land use within York County ranges from densely populated urban areas, to suburban residential areas, to rural, farm areas, farms and forest land. The largest community in the County is Biddeford, with a 2010 population of 21,303. At least eighteen, or 62%, of the communities in the County have enacted a comprehensive plan since 2000. All 29 communities are participants in the National Flood Insurance Program. About 90% of the communities have local shoreland zoning ordinances that are consistent with State law, while the remaining communities follow State imposed shoreland regulations. 28 of the 29 cities and towns have enacted town-wide zoning ordinances.

Between 2000 and 2010, the County's population grew from 186,742 to 198,934, for a gain of 12,192 people, or 9%. However, some communities experienced growth rates as high as 51%, while others experienced very little growth. A clear trend in the County is that nearly all of the residential growth is occurring in the suburban and rural communities, while virtually no growth is occurring in the major cities. Although on-going changes are occurring in York County, growth has been monitored in a manner that protects the hazard prone areas from further development which could affect the vulnerability of the community.

The table below documents the rate of growth for all municipalities in York County.

Back to Agenda

York County
Population Growth 2000 – 2010

	Total Population 2000 Census	Total Population 2010 Census	Change in Number	Percent Change
Acton	2,145	2,497	352	16%
Alfred	2,497	3,051	554	22%
Arundel	3,571	4,100	529	15%
Berwick	6,353	7,400	1,047	16%
Biddeford	20,942	21,303	361	2%
Buxton	7,452	8,079	627	8%
Cornish	1,269	1,383	114	9%
Dayton	1,805	1,989	184	10%
Eliot	5,954	6,234	280	5%
Hollis	4,114	4,343	229	6%
Kennebunk	10,476	10,972	496	5%
Kennebunkport	3,720	3,510	-210	-6%
Kittery	9,543	9,573	30	0%
Lebanon	5,083	6,077	994	20%
Limerick	2,240	2,905	665	30%
Limington	3,403	3,734	331	10%
Lyman	3,795	4,356	561	15%
Newfield	1,328	1,499	171	13%
North Berwick	4,293	4,602	309	7%
Ogunquit	1,226	1,141	-85	-7%
Old Orchard Beach	8,856	8,679	-177	-2%
Parsonsfield	1,584	1,746	162	10%
Saco	16,822	18,757	1,935	12%
Sanford	20,806	20,853	47	0%
Shapleigh	2,326	2,676	350	15%
South Berwick	6,671	7,276	605	9%
Waterboro	6,214	7,747	1,533	25%
Wells	9,400	9,783	383	4%
York	12,854	12,661	-193	-2%
Total York County	186,742	198,934	12,192	7%

Back to Agenda

MULTI-JURISDICTIONAL RISK ASSESSMENT

12. Multi-Jurisdictional Risk Assessment	
Requirement §201.6(c)(2)(iii): For multi-jurisdictional plans, the risk assessment must assess each jurisdiction's risks where they vary from the risks facing the entire planning area.	
Element	**A.** Does the new or updated plan include a risk assessment for each participating jurisdiction where they vary from those facing the entire county?

York County is a county of more than 198,934 people living in 991 square miles located in the southern most area of the State of Maine. The county was incorporated in 1636 and the county seat is located in the Town of Alfred. There are 29 municipalities within the county; 3 cities and 26 towns. All municipalities contributed to the risk assessment analyses completed for the York County Hazard Mitigation Plan.

The following hazards were identified as the same general risks for which all areas of the County are subjected:

- Flooding
- Severe winter and summer storms
- Wildfires (although all areas are at risk from wildfires, less densely developed areas like Parsonsfield face extensive acreage losses due to the lack of roads to provide forest land access. In addition, the resources of small municipal fire departments for fighting wildfires are extremely limited, due to the small population base).

The following hazards were identified as primarily affecting the coastal communities of Old Orchard Beach, Saco, Biddeford, Kennebunkport, Kennebunk, Wells, Ogunquit, York, and Kittery.

- Coastal Flooding
- Coastal Erosion
- Severe Summer Storms

Hurricane winds and flooding in York County will primarily affect the coastal communities which are susceptible to hurricane storm surge.

Back to Agenda

5. MITIGATION STRATEGY

Mitigation Strategy	
Requirement: §201.6(c)(3): (The plan must include) a mitigation strategy that provides the jurisdiction's blueprint for reducing the potential losses identified in the risk assessment. This section shall include: (i) For multi-jurisdictional plans, there must be identifiable action items specific to the jurisdiction requesting FEMA approval or credit of the plan.	
Element	C1: Does the plan document each jurisdiction's existing authorities, policies, programs and resources…ability to expand on and improve?
	C4: Does the Plan identify and analyze a comprehensive range of specific mitigation actions and projects?
	C5: Does the Plan contain…actions…prioritized (including cost benefit review), implemented, and administered by each jurisdiction?
	D2: Was the plan revised to reflect progress in local mitigation efforts?
	D3: Was the plan revised to reflect changes in priorities?

Existing Authorities, Policies, Programs and Resources

Below is a summary of existing authorities, policies, programs and resources available to accomplish hazard mitigation in the communities of York County. See also the table that follows this summary.

- **Town Manager, Administrator, Administrative Assistant to the Selectmen:** Some towns in York County have a town manager, others have an administrator whose duties may vary from those of a town manager, and still others have an administrative assistant to the selectmen who may serve as staff to the selectmen but may not have the powers of a town manager to hire staff. In the table below, "TM" indicates town manager
- **Staff Resources**: Staff resources, where available, usually consist of a planner or community development director. No towns in York County have staff resources devoted exclusively to hazard mitigation.
- **Public Works or Road Commissioner**: Some of the larger towns have a public works director, but most have a road commissioner. The road commissioner might also be the town manager or board of selectmen.
- **Flood Hazard Ordinance:** All of the towns that are in the Flood Insurance Program have a flood hazard ordinance in effect.
- **Shoreland Zoning:** All towns are required to have a shoreland zoning ordinance, whether adopted by the municipality or imposed by the Maine Department of Environmental Protection.
- **Form of Government**: In the following table, the letters "CMM" indicates a city council/mayor or city manager, "ST" indicate the selectmen/town meeting form of government.
- **Resources**: In addition to staffing or other expertise, funding resources are from local taxes and/or grants that are funded by taxes or private donations.

* **Expansion/Improvements: All jurisdictions in York County could expand and improve their existing capabilities if additional funds, beyond their existing tax bases, become available to address the hazard mitigation projects listed in Chapter 5 - Mitigation Strategy Project List.**

Back to Agenda

Town	Management Type	Staff involved in local planning	Public Works or Road Commissioner	EMA Director	Flood Ordinance	Shoreland Ordinance	Form of Government
Acton	SB	X	RC	X	X	X	ST
Alfred	SB	X	RC	X	X	X	ST
Arundel	TM	X	DPW & RC	X	X	X	ST
Berwick	TM	X	RC	X	X	X	ST
Biddeford	CM	X	DPW	X	X	X	CMM
Buxton	SB	X	DPW	X	X	X	ST
Cornish	SB	X	RC	X	X	X	ST
Dayton	SB	X	RC	X	X	X	ST
Eliot	TM	X	DPW	X	X	X	ST
Hollis	SB	X	RC	X	X	X	ST
Kennebunk	TM	X	DPW & RC	X	X	X	ST
Kennebunkport	TM	X	RC	X	X	X	ST
Kittery	TM	X	DPW	X	X	X	CMM
Lebanon	SB	X	RC	X	X	X	ST
Limerick	SB	X	RC	X	X	X	ST
Limington	SB	X	RC	X	X	X	ST
Lyman	SB	X	RC	X	X	X	ST
Newfield	SB	X	RC	X	X	X	ST
North Berwick	TM	X	RC	X	X	X	ST
Ogunquit	TM	X	DPW & RC	X	X	X	ST
Old Orchard Beach	TM	X	DPW	X	X	X	CMM
Parsonsfield	SB	X	RC	X	X	X	ST
Saco	CM	X	DPW	X	X	X	CMM
Sanford	CM	X	DPW	X	X	X	CMM
Shapleigh	SB	X	RC	X	X	X	ST
South Berwick	TM	X	DPW & RC	X	X	X	CMM
Waterboro	TM	X	DPW	X	X	X	ST
Wells	TM	X	RC	X	X	X	ST
York	TM	X	DPW	X	X	X	ST

CM = City Manager
DPW = Director, Public Works
RC = Road Commissioner

ST = Select Board/Town Meeting
TM = Town Manager
CMM = Councilors/Mayor/Manager

SB = Select Board

A. GENERAL GOALS OF THE PLAN

Through conducting the risk assessment for York County, five key goals of hazard mitigation were identified. These goals respond to the types of losses typically caused by hazards and the usual obstacles to enacting successful hazard mitigation strategies. Although the exact objectives for each hazard category will differ, the overarching goals will remain the same.

Back to Agenda

The five goals and the reasons for their selection are listed below.

Goal #1: Minimize Damage, Injury and Loss of Life

York County is at a relatively high risk for extensive damage from disasters due to its combination of extreme weather, substantial development in coastal and floodplain areas, heavy forest cover and old infrastructure. Large-scale disasters in the past have caused widespread property damage, injury and loss of life in the county, and it is therefore a goal of this hazard mitigation plan to reduce these impacts from future events.

Goal #2: Protect Economic Vitality of Businesses

About 65,000 people work in York County and many of its businesses are vulnerable to substantial damage from hazards. The county's economic health could be greatly damaged by a major disaster. Thus, ensuring that businesses suffer as little economic loss as possible is the second goal of the plan.

Goal #3: Ensure Continuity of County and Local Government Operations

The governments of York County and its 29 towns provide the nearly 187,000 citizens (as well as thousands of seasonal visitors/residents) public safety, human services, and in many communities, water supplies. Since residents and visitors need these basic governmental services to ensure their health and well-being, it is imperative to protect these services from the effects of disasters.

Goal #4: Make Efficient Use of Public Funds for Hazard Mitigation

The State of Maine and the majority of municipal governments in the state are presently facing budget difficulties, thus raising the importance of efficiency in public spending. With this in mind, it is necessary that local and county funds used for hazard mitigation be invested wisely and efficiently.

Goal #5: Raise Public Awareness of and Support for Hazard Mitigation

Many of the mitigation measures against damage from hazards need to be done by individual residents and property owners, and will not come as a result of major public investments. Also, the larger public investments that will be needed cannot be undertaken without the support of the public. Raising public awareness will thus be needed for all types of mitigation, large or small.

B. MITIGATION ACTIONS BY GOAL AND OBJECTIVE

In this section the above goals are used to define objectives and specific mitigation actions that respond to each of the five hazard types considered in the mitigation plan. For each goal of the mitigation plan, objectives and specific recommended actions are put forth. Each action is analyzed for its likely effectiveness against a number of criteria to address goals of the plan (Table 1).

The objectives and action steps are organized under each of the five major goal headings. This section concludes with a matrix that displays all of the recommended actions, organized by goal, objective, and hazard type and includes responsible parties and implementation status (Table 2).

Back to Agenda

The analysis of each of the mitigation actions was accomplished by using a scoring system with five criteria. See next page:

1. Life / Safety – Will it protect lives and/or property from hazard losses?
2. Population Benefited – How many people will benefit from the action?
3. Probability Community Acceptance – Will the community accept the action or will it face resistance?
4. Probability Funding – How likely will it be to get funding?
5. Feasibility of Implementation – How easy will it be to implement?

For each action, each of these criteria was given a score of 1 to 3 by the planning team, with 3 being the best and 1 being the worst. The total scores for each action were added. The range of scores was from 5 to 15 with a median score of 11.2.

Back to Agenda

TABLE 1 - York County Hazard Mitigation Plan: Mitigation Actions Analysis Worksheet

GOAL 1: MINIMIZE DAMAGE, INJURY AND LOSS OF LIFE

Obj #	Objectives	Action no.	Mitigation Actions	Life Safety	Population Benefited	Probability Community Accepts	Probable Funding	Feasibility of Implement	Total Score	STATUS
1.1.	**Discourage future residential and commercial development in hazard-prone areas**	1.1.1.	Conduct detailed local inventories of hazard-prone areas	4	2	2	1	2	11	Revised after DR-4208
		1.1.3.	Educate property owners and developers about risks of developing structures in hazard-prone areas	4	3	2	1	3	13	Community meetings held 2013-2015 about development in hazard areas
1.2.	**Improve emergency evacuation routes and plans**	1.2.1.	Develop local evacuation routes and plans	4	3	2	3	3	15	June 2016 held two meetings with city/towns to establish evacuation zones based on 2016 maps
		1.2.2.	Develop regional evacuation plan	3	3	3	2	3	14	Will develop *after* each city/town has established its evacuation zones
1.3.	**Enact and enforce regulations that reduce the threat of hazard damage**									
1.4.	**Improve functionality of emergency shelter system**	1.4.1.	Equip more facilities for emergency shelter use – currently researching for adequate facilities and funding required to equip	2	3	3	2	3	13	As planned – we assist locals with locating supplies or equipment needed for emergency shelters

Back to Agenda

			2 shelters							
1.5.	**Improve post-disaster reporting systems**	1.5.1.	Create countywide post-disaster reporting system	3	3	3	3	3	15	Developed with use of First Responders and CERT Teams
		1.5.2.	Establish volunteer corps of citizen reporters	3	3	3	3	3	15	Planned - can accomplish with First Responders and CERT Teams

GOAL 2: PROTECT ECONOMIC VITALITY OF BUSINESSES

Obj #	Objectives	Action no.	Mitigation Actions	Life Safety	Population Benefited	Probability Community Acceptance	Probability Funding	Feasibility of Implemen-tation	Total Score	STATUS
2.1.	**Ensure that infrastructure is fully restored as quickly as possible after disasters occur**	2.1.1.	Create and maintain database of critical infrastructure	3	3	3	3	3	15	Completed - We worked with *SMPDC to maintain this data.
		2.1.2.	Enact plans for restoring functionality of priority infrastructure	3	3	3	3	3	15	Completed – We ensured that city/towns have COOP Plans.
		2.1.3.	Offer support services to businesses affected by hazards	3	3	3	3	3	15	Completed - We assisted with any services needed
2.2.	**Encourage owners of commercial properties and businesses to enact mitigation measures**	2.2.1.	Document long-term economic benefits of mitigation	3	3	2	1	2	11	Explained to LED's at meetings and events - case studies from Saco and York show the benefits
		2.2.2.	Create and distribute how-to guide for hazard mitigation	3	3	2	1	2	11	Completed - information is available, disbursed locally and added to our website
2.3.	**Ensure that all workers and**	2.3.1.	Identify high priority commuter routes for	3	3	2	1	3	12	Completed

Back to Agenda

	customers can access businesses		protection							
		2.3.2.	Ensure that key transportation routes remain open	3	3	2	2	3	13	Completed – we worked with locals and monitored these routes at all times
		2.3.3.	Maintain a business information hotline for post-disaster periods	2	2	1	1	1	7	No funding - We partner with 211 ME for this service
2.4.	**Maintain security during and after hazard events**	2.4.1.	Develop property security plans for all hazard types	3	3	3	3	3	15	In the planning stages – we educate locals regarding hazards
		2.4.2.	Coordinate with local, county and state law enforcement officials	3	3	3	3	3	15	As planned – we continually work with all local authorities

GOAL 3: ENSURE CONTINUITY OF COUNTY AND LOCAL GOVERNMENT OPERATIONS

Obj #	Objectives	Action no.	Mitigation Actions	Life Safety	Population Benefited	Probability Community Acceptance	Probability Funding	Feasibility of Implementation	Total Score	STATUS
3.1.	**Enact strict mitigation standards for key public facilities**	3.1.1.	Identify key public facilities	3	3	3	3	2	14	Completed - we worked with *SMPDC to maintain this data.
		3.1.2.	Develop minimum standards for public buildings	3	3	3	2	2	13	Defer – State/City/Town responsibility to develop standards or codes
		3.1.3.	Seek financial assistance for public facility mitigation	3	3	3	2	2	13	As planned – continually assist municipalities with funding possibilities
3.2.	**Develop formal arrangements for sharing of facilities**	3.2.1.	Create electronic database of countywide inventory of facilities and equipment	3	3	3	2	3	14	Planned – working with LEPC and *SMPDC to develop

Back to Agenda

	and equipment in case of disasters	3.2.2.	Identify inventory items most at risk for each hazard type	3	3	3	2	3	14	Planned – will identify during development of database
		3.2.3.	Institute procedures for sharing facilities and equipment	3	3	3	2	3	14	Completed - existing MOU's and will develop more
3.3.	**Encourage municipalities to develop, adopt and implement local hazard mitigation plans**	3.3.1.	Provide each municipality with annexes and appendix data from countywide plan	3	3	3	3	3	15	Completed – each city/town adopts and has a copy of the county plan
		3.3.2.	Assist localities with collection of inventory data	3	3	3	3	3	15	Defer to City/Town; local responsibility

GOAL 4: MAKE EFFICIENT USE OF PUBLIC FUNDS FOR MITIGATION

Obj #	Objectives	Action no.	Mitigation Actions	Life Safety	Population Benefited	Probability Community Acceptance	Probability Funding	Feasibility of Implement ation	Total Score	STATUS
4.1.	**Protect critical public facilities and services from hazard damage**	4.1.1.	Use critical facilities inventory to identify potential mitigation projects for each hazard type	3	3	2	2	2	12	Discussed at LEPC meetings; planned inventory database
		4.1.2.	Identify potential funding sources for mitigation projects	3	2	2	1	1	9	Planned after specific projects are identified and costs estimated
		4.1.3.	Establish a central procurement resource for conducting mitigation projects in York Co.	2	1	1	1	1	6	Deferred due to lack of funding
4.2.	**Prioritize hazard mitigation activities by benefit-cost**	4.2.1.	Estimate public costs of mitigation projects	3	2	2	2	2	11	Defer to local Public Works Dept./Rd. Comm.
		4.2.2.	Estimate potential damage without mitigation measures	3	2	2	1	2	10	Defer to local authorities

Back to Agenda

	ratios	4.2.3.	Compare ratio of public costs to potential damage avoided for potential mitigation projects	3	2	2	2	2	11	Planned - need to be developed over the next few years
4.3.	**Use public funds to limit development of buildings and facilities in hazard-prone locations**	4.3.1.	Identify properties that have suffered repetitive hazard damage	3	3	2	1	2	11	Documented and updated after each disaster event
		4.3.2.	Acquire high-risk properties in hazard areas	3	3	2	1	2	11	Deferred – local issue and funding dependent
		4.3.3.	Purchase development rights to prevent further development in hazard areas	3	2	2	1	2	10	Deferred - local issue and funding dependent
		4.3.4.	Offer financial incentives to build on sites that are clear of vegetation	1	1	1	1	1	5	Deferred - local issue and funding dependent
4.4.	**Preserve invaluable cultural and historic resources in hazard-prone areas**	4.4.1.	Identify cultural and historic resources in hazard areas	3	2	2	1	2	10	Completed – local authorities and *SMPDC identified these resources
		4.4.2.	Enact mitigation projects on properties of cultural and historic importance	3	2	2	1	2	10	Deferred – local initiative and funding dependent

GOAL 5: RAISE PUBLIC AWARENESS OF AND SUPPORT FOR MITIGATION

Obj #	Objectives	Action no.	Mitigation Actions	Life Safety	Population Benefited	Probability Community Acceptance	Probability Funding	Feasibility of Implementation	Total Score	STATUS
5.1.	**Encourage property owners to undertake voluntary mitigation measures**	5.1.1.	Create and distribute how-to guide for hazard mitigation (same as 2.2.2.)	3	2	1	1	2	9	Completed - information is available, disbursed locally and added to our website
5.2.	**Improve visibility and knowledge of evacuation routes and emergency**									
		5.2.2.	Develop distinctive and uniform signage for	3	2	2	2	2	11	Completed in coastal areas; planned inland

Back to Agenda

	shelters		evacuation routes							improvements
		5.2.3.	Notify residents about locations of nearby emergency shelters and preferred evacuation routes	3	2	2	2	2	11	Defer to locals or 211ME to provide this information in an emergency
5.3.	**Educate children about hazard mitigation**	5.3.1.	Develop hazard mitigation educational materials aimed at children	3	2	2	1	2	10	Completed - information is available, disbursed locally and added to our website

*SMPDC = Southern Maine Planning & Development Commission

The following Table 2 was deleted from the section since a status column has been added onto Table 1. making this table duplicate information and unnecessary.

Back to Agenda

5. MITIGATION STRATEGY – PROJECT LIST

Prioritized Local Mitigation Projects in York County

Projects listed in priority order: Most municipalities in the County identified one or more action items consistent with the County-wide goals, objectives and actions, to mitigate hazards at the local level. The jurisdictions, as well as the specific actions they will pursue, are listed in numerical priority order in the following table. The time frames for this five year plan begin when permitting and funding have been obtained.

Criteria for prioritization: The list of local projects was developed separately by each municipality. Local officials did not use formal, written criteria for the identification of local projects. Local officials relied on common sense, local knowledge of the frequency and extent of local damages, local knowledge of which projects were of the highest priority, based on frequency and severity of damages, local knowledge of the weather, the geography and topography of the community, and the technical and financial abilities of their respective communities to address hazards and mitigate the impacts of hazards.

Use of a cost-benefit analysis: Many of the jurisdictions included in this Plan are small towns run by *part time staff and / or volunteers*. They do not have staff, resources or funding to prepare cost-benefit analyses for the projects included in this Plan. However, in virtually all cases involving expenditure of local funds for implementation, there will be a very rigorous, line-by-line analysis of cost effectiveness during the budget review process and subsequent public discussion *through regular and special meetings*. This review is at least equal to a formal benefit-cost calculation because each expenditure item will be carefully scrutinized rather than simply being plugged into a formula. Nevertheless, MEMA and the County EMA have made it clear to local officials that a formal cost benefit analysis will have to be prepared in the event they apply for mitigation funding.

Status of completed, deleted or deferred projects: The following table of projects contains a status column that identifies the completed, deleted or deferred mitigation projects. For deferred projects, the "status" column lists the reason or reasons that no changes occurred – **most commonly, the lack of available funding.**

Funding Sources: The major sources of funding are through local taxes and grants, which are funded by taxes and/or private donors.

Back to Agenda

CITY/TOWN		PROJECT LIST - IN PRIORITY ORDER	COST	TIMELINE	RESPONSIBLE AGENT	PROJECT STATUS
ACTON	1	All roads in general: survey all culverts - upgrade & resize where necessary including ditching	$150,000	8 mths	Town Mgr	New Project
	2	Peacock Rd. - Ditching, stone ditch and upgrade culverts	$16,000	4 wks	Town Mgr	Completed
	3	Sanborn Rd. - Ditching, stone ditch	$10,000	2 wks	Town Mgr	Completed
	4	Sam Page Rd. - Ditching, stone ditch	$10,000	2 wks	Town Mgr	Completed
ALFRED	1	Brackett Hill Rd. - rebuild road base 10,000' X 18' & ditch	$400,000	4 mths	Road Commissioner	Still deferred; lack of funding
	2	Federal Street-Corner of Gile Road - upgrade 4' culvert	$35,000	1 wk	Road Commissioner	New Project
	3	Mouse Lane - upgrade 1,000' of underdrain, ditch & rebuild road base with fabric	$100,000	2 wks	Road Commissioner	New Project
	4	Mountain Rd. - rebuild road base 3,000'	$200,000	3 wks	Road Commissioner	New Project
	5	Carpenter Rd. - ditch 2,500' and add (2) 18" X 30' cross cultverts	$9,000	3 wks	Road Commissioner	Completed
	6	Deshon Hill Rd. - ditch 450', upgrade and upsize culverts (12" to 18")	$7,000	2 wks	Road Commissioner	Completed
	7	Federal Street - ditching and upgrade culverts	$10,000	2 wks	Road Commissioner	Planning Phase
	8	Gore Rd. - ditching and upgrade culverts	$10,000	2 wks	Road Commissioner	Planning Phase
	9	Witchers Mills Rd. - ditching and upgrade culverts	$10,000	2 wks	Road Commissioner	Planning Phase
ARUNDEL	1	Downing Rd at Duck Brook - slip line existing 12' 8" X 8' X 55' arch pipe to increase flow capacity	$55,000	4 wks	Road Commissioner	Still in Planning Phase; seeking funding
BERWICK	1	Elevate or acquire flood damaged homes	TBD	TBD	Town Mgr. Contractors	Ongoing; no eligible applicants
	2	Wilson St. - upsize existing underground drainage system between Wilson St. and Salmon Falls River	$100,000	4 mths	Road Commissioner	Deferred; still lack funding
	3	Little River Rd. - upsize existing twin 24" x 30' culverts with 60" x 40' elliptical pipe.	$12,000	2 wks	Road Commissioner	Deferred; still lack funding

Back to Agenda

CITY/TOWN		PROJECT LIST - IN PRIORITY ORDER	COST	TIMELINE	RESPONSIBLE AGENT	PROJECT STATUS
BERWICK	4	Adeline Rd. - Add 36" x 40' overflow pipe at brook crossing tying into natural swale	$6,000	2 wks	Road Commissioner	Deferred; still lack funding
BIDDEFORD	1	Granite Point Rd. - elevate road way for 500', expand retaining wall to protect from overflow	$500,000	2 yrs.	Public Works	Planning Phase
	2	Fortunes Rock Rd. - elevate road, raise retaining wall and upgrade culverts	$1,000,000	2 yrs.	Public Works	Planning Phase
	3	Route 111@Maine Turnpike; H&H study to address storm water flooding events, mitigate as needed	$150,000	2 yrs.	MDOT, MTA & Public Works	MTA doing study; seeking funding
BUXTON	1	Patten Farm Rd. - upsize existing 6' X 7' X 24' bridge with 10' X 6' X 24' box culvert with headwall	$62,000	6 wks	Road Commissioner	Still in Planning Phase; seeking funding
	2	Back Nippen Rd. - upsize 48" culvert with 60" culvert, elevate roadway 2', geotextile on slopes and rip rap	$14,000	4 wks	Road Commissioner	Planning Phase
	3	Town Farm Rd. - repave roadway and upgrade culverts	$56,000	2 mths	Road Commissioner	Planning Phase
	4	Elden Rd. - ditching, regrade 1525' X 18' roadway and pave. Remove 8 trees, upgrade culverts in roadway and driveways, rip rap pipes	$35,000	2 mths	Road Commissioner	Planning Phase
	5	Henry Hill Rd. - upsize existing culvert & elevate road	$65,000	6 wks	Road Commissioner	Completed
CORNISH	1	High Rd. (Rt 25 to School St.) - Drainage project to include 18 catch basins and underdrain	$100,000	6 mths	Road Commissioner	Engineering study complete; project **still lacks** funding
	2	Roland Day Rd. - elevate 1000' x 3' x 19' and add (3) 24" x 40' culverts	$45,000	4 wks	Road Commissioner	Deferred; seeking funds
	3	Maple St. - Town Hall erosion	$10,000	3 mths	Road Commissioner	New Project
DAYTON	1	Hollis Rd. - upgrade/increase # culverts, rip rap, repave	$80,000	8 wks	Road Commissioner	Planning Phase
	2	Hight Rd. - upsize 18' culvert to 24", install rip rap, regrade road	$50,000	5 wks	Road Commissioner	Planning Phase
	3	Dennet Rd. - upsize 18" culvert to 24", install rip rap	$50,000	5 wks	Road Commissioner	Planning Phase
	4	Murch Rd. - upsize culvert, install rip rap, upgrade road surface	$80,000	8 wks	Road Commissioner	Planning Phase

Back to Agenda

CITY/TOWN		PROJECT LIST - IN PRIORITY ORDER	COST	TIMELINE	RESPONSIBLE AGENT	PROJECT STATUS
DAYTON	5	Buzzel Rd - 6 to 8' culvert arch, rip rap	$162,000	8 wks	Road Commissioner	New Project
ELIOT	1	Frost Hill Rd. - add 48" x 40' culvert to utilize second channel	$5,000	2 wks	Road Commissioner	Completed July 2013
	2	Cedar/Depot Rd Drainage System - add 48" x 40' culvert on Depot Rd.	$7,000	2 wks	Road Commissioner	Completed July 2012
	3	Brixham Rd. - upsize culvert	$5,000	2 wks	Road Commissioner	Completed July 2012
	4	Old Field Road Bridge - address abutment erosion, possible new abutments	$440,000	16 wks	Road Commissioner	Completed October 2014
	5	Pleasant St. - Stabilize river bank. Rip rap 30' x 100' x 5' of river bank	$5,000	2 wks	Road Commissioner	Repaired but needs additional work
HOLLIS	1	Cape Rd. - upsize 36" culvert to 48", elevate road bed approximately 5', shape slopes, repave roadway	$186,000	4 mths	Road Commissioner	Completed
	2	Burnham Lane - upgrade 4 existing culverts with one 72" culvert, elevate roadway	$53,000	2 mths	Road Commissioner	Completed
	3	Saco Rd. - elevate roadway 2'-3'	$88,000	2 mths	Road Commissioner	Planning Phase
	4	Sand Pond Rd. - elevate 500' X 32" X 22', ditch & line 1200', add (3) 24" X 30' culverts and repave	$25,000	6 wks	Board of Selectmen	Planning Phase; seeking funding
	5	Clark Mills Rd./Glaude Ave. - ditch 700' , reshape and line ditch	$7,000	2 wks	Board of Selectmen	Still deferred
	6	Hailey Rd. - elevate 300' x 3' x 19', upsize 24" culvert to 36" x 30', rip rap intake and outflow & repave	$45,000	4 wks	Board of Selectmen	Still Deferred for lack of funds
	7	Salmon Falls Rd. - upgrade 5 existing culverts	$30,000	2 wks	Board of Selectmen	New Project
KENNEBUNK	1	Scottsman Brook Route 1/Main St. - 800' culvert locations	$1,200,000	8 wks	Public Works, Contractor	90% complete; seeking funds for remaining work
	2	Alfred Rd. - culvert and drainage	$400,000	6 wks	Public Works	Deferred until funding available
	3	Gooches Beach - upgrade 1,550' wooden sea wall	$2,325,000	10 wks	Public Works	Partially complete - 700' left: seeking funds
	4	Woodhaven - 4000' underground drainage	$480,000	6 wks	Public Works	Still deferred until funding available

Back to Agenda

CITY/TOWN		PROJECT LIST - IN PRIORITY ORDER	COST	TIMELINE	RESPONSIBLE AGENT	PROJECT STATUS
KENNEBUNK	5	Intervale & Partridge - acquire and demolish 3 homes; elevate 11 homes 2' above 2007 HWM	$1,460,972	18 mths	Town Mgr., CEO, Contractors	HMGP 1693 Completed 2010
	6	Bayberry Ave. - 6000' underground drainage and catch basins	$720,000	6 wks	Public Works	Still deferred until funding available
	7	Cole Rd. - drainage	$350,000	4 wks	Public Works	New Project; seeking funds
	8	Emmons Rd. - bridge reconstruction and elevation	$1,000,000	8 wks	Public Works	New Project: seeking funds
KENNEBUNKPORT	1	Dyke Rd. - elevate 2100' X 3' X 24' and repave	$135,000	8 wks	Public Works	Completed
	2	Kings Hwy. - elevate 2100' X 3' X 21' and repave	$115,000	8 wks	Public Works	Completed ~~99~~
	3	Pier Rd. - stabilize head of cove 200' X 10'	$34,000	4 wks	Public Works	Completed
	4	Pier Rd. Causeway - elevate 25' X 3' X 24' and repave	$18,000	4 wks	Public Works	Still Planning until funding available
	5	Ocean Ave. - elevate 2 sections of road 500' X 3'	$100,000	4 wks	Public Works	Planning Phase
	6	Goose Rocks Rd. - upsize existing 48" X 40' culvert to 72" X 60' elliptical pipe	$24,000	2 wks	Public Works	Planning Phase; seeking funding
	7	Arundel Rd. - elevate road 300' X 3' X 22', repave and add 8' X 50' culvert	$30,000	4 wks	Public Works	Planning Phase; seeking funding
KITTERY	1	Intersection of Government and Walker St. - upsize culvert	$30,000	2 wks	Public Works	Completed
	2	Payne Rd. - elevate 700' section of road	$100,000	4 wks	Public Works	Planning Phase - seeking funds
LEBANON	1	Poplar Hill Rd. - ditch 30,000' and line 2,000' of ditch; upsize (2) 24" X 40' culverts	$85,000	6 wks	Road Commissioner	Still in Planning Phase; seeking funding
	2	Dickson Rd. - ditch 30,000' and line 2,000' of ditch; upsize (2) 24" X 40' culverts	$73,000	6 wks	Road Commissioner	Still in Planning Phase; seeking funding
	3	Shapleigh Rd. - ditch 15,000, upsize 24" X 40' culvert	$33,000	4 wks	Road Commissioner	Still in Planning Phase; seeking funding
	4	Orrills Hill Rd. - upsize culvert	$30,000	2 wks	Road Commissioner	Planning Phase

Back to Agenda

CITY/TOWN		PROJECT LIST - IN PRIORITY ORDER	COST	TIMELINE	RESPONSIBLE AGENT	PROJECT STATUS
LEBANON	5	Union School Rd./Lower Guinea Rd. - upsize culvert	$20,000	2 wks	Road Commissioner	Planning Phase
	6	Upsize culverts - various locations	$15,000	3 wks	Road Commissioner	Planning Phase
LIMERICK	1	Burnham Rd. - ditch 5000' and install 500' underdrain	$22,000	3 wks	Road Commissioner	Completed 2009
	2	Foss Rd. - install additional 36" x 40' culvert and rip rap intake and outflow	$7,000	2 wks	Road Commissioner	Completed 2007
	3	Identify all culverts in town with GPS and identify status	$2,000	2 wks	Road Commissioner	Planning Phase - seeking funding
LIMINGTON	1	Whaleback Rd. -upgrade 10' x 70' steel culvert, riprap intake and outflow, stabilize banks with geotextile and riprap, ditch 1800' with fabric, riprap and check dams	$95,000	4 wks	Road Commissioner	Completed
	2	Moody Rd. - 850' ditch with fabric, riprap and check dams	$11,000	1 wk	Road Commissioner	Completed
	3	Hanscomb School Rd. - 1200' ditch with fabric, riprap with check dams	$15,000	2 wks	Road Commissioner	Completed
	4	Doles Ridge Rd. - upsize existing twin 36" x 40' cmp with 6' x 4' x 40' box culvert and rip rap intake and outflow	$71,567	4 wks	Road Commissioner	HMGP 1755 Completed 2009
	5	Mill Turn Rd. - ditch 1,900' with fabric, rip rap including check dams	$23,000	2 wks	Road Commissioner	Planning Phase
	6	River Rd. - ditch 2,000', mitigate with fabric, rip rap including check dams	$26,000	2 wks	Road Commissioner	Planning Phase
	7	Tucker Rd. - Rt. 25 to Lipaline Dr. - ditch, mitigate with fabric, rip rap and upgrade culverts	$11,000	1 wk	Road Commissioner	New Project
	8	Tucker Rd. - from Sage Rd. 1,800' - ditch, rip rap and upgrade culverts	$10,000	1 wk	Road Commissioner	New Project
	9	Boothby Rd.-from Axelsen Rd. to Beaver Berry Rd. - ditch, fabric, rip rap and clear culverts	$15,000	2 wks	Road Commissioner	New Project
	10	Boothby Rd. and Axelsen Rd. intersection - upgrade large culvert, fabric, rip rap	$175,000	2 wks	Road Commissioner	New Project
	11	Douglas Rd. to Merrifield Farm Rd - remove berms, ditch, fabric, rip rap, check dams where needed and upgrade culverts	$13,000	3 wks	Road Commissioner	New Project

Back to Agenda

CITY/TOWN		PROJECT LIST - IN PRIORITY ORDER	COST	TIMELINE	RESPONSIBLE AGENT	PROJECT STATUS
LIMINGTON	12	Doles Ridge Rd. - from Rt. 117 in 1,800' - ditch, remove berms, fabric, rip rap, check dams and clear all culverts	$8,000	3-4 days	Road Commissioner	Planning Phase
	13	Moody Rd. - from Rt. 117 to Rt. 11 - ditch, fabric, rip rap, check dams and clear all culverts	$15,000	2 wks	Road Commissioner	New Project
	14	Hanscomb School Rd. - remove berms, ditch where needed, rip rap, check dams and fabric as needed. upgrade one cross culvert.	$15,000	8 days	Road Commissioner	New Project
	15	Allen Hill Rd. - from Rt. 11 to Moody Rd. - ditch, rip rap, fabric and upgrade 4 15' X 30' culverts	$18,000	2 wks	Road Commissioner	New Project
	16	Richardson Rd. - ditch, rip rap, fabric and upgrade 4 15' X 30' culverts	$11,000	2 wks	Road Commissioner	New Project
	17	Sedgley Rd. - from Jo Joy Rd. to Limerick line - ditch, remove berms, rip rap, check dams and fabric	$20,000	2 wks	Road Commissioner	New Project
LYMAN	1	Old North Berwick Rd. - elevate road, upgrade culverts and ditch	$200,000	6 wks	Public Works	Planning Phase
	2	Clarks Wood Rd. - ditching	$15,000	3 wks	Public Works	Planning Phase
NEWFIELD	1	Demeritt Rd. - ditching for 750', install culvert at intersection with Lost Mile Road	$10,000	2 wks	Road Commissioner	Completed 2014
	2	Stone Rd. - ditch and line 2500', including blasting of ledge	$10,000	2 wks	Road Commissioner	Completed 2014
	3	Lewis Rd. - ditch 600' to include blasting of ledge	$10,000	2 wks	Road Commissioner	Still in Planning Phase - seeking funding
NORTH BERWICK	1	Complete all road surveys - upgrade & upsize culverts including ditching	$200,000	10 mths	Road Commissioner	New Project
	2	Hartford Lane - ditch and line 2,000' and add/check dams	$20,000	4 wks	Road Commissioner	Completed
	3	Dyer St. - upgrade underdrain-increase size of storm drainage from 24" to 36" pipes	$25,000	6 wks	Road Commissioner	Completed
	4	Little River Rd. - upgrade 36" culvert with 42" culvert; elevate roadway by 8"	$17,000	3 wks	Road Commissioner	Completed
	5	Fox Farm Hill Rd. - upgrade 18" culvert with 24", ditch, install stone ditch, upgrade (6) driveway pipes - upsizing 12" to 18"	$35,000	5 wks	Road Commissioner	Completed

Back to Agenda

CITY/TOWN		PROJECT LIST - IN PRIORITY ORDER	COST	TIMELINE	RESPONSIBLE AGENT	PROJECT STATUS
NORTH BERWICK	6	Lebanon Rd. - upgrade 30" culvert with 42" culvert	$10,000	2 wks	Road Commissioner	Completed
OGUNQUIT	1	Captain Thomas Rd. - upsize 36" X 40' to 60" X 40' and 24" X 40' to 36" X 40' culverts, raise roadway 2-3', repave	$100,000	2 mths	Public Works	Planning Phase – **still** seeking funding
	2	Kings Highway - upgrade foot bridge with 6' X 40' span	$12,000	4 wks	Public Works	Ongoing Project
OLD ORCHARD BEACH	1	Ross Rd. - elevate and widen 700' X 2' X 24', upsize existing 24" culvert with (2) 48" X 40' culverts and repave	$145,000	6 wks	Public Works	Completed
	2	Walnut St. - ditch and line 2,000', upgrade sub soil	$22,000	3 wks	Public Works	Completed
	3	Drainage Structure (french drain) at (11) different locations - cost is the same for each site	$50,000	12 wks	Public Works	Ongoing project
	4	West Grand Ave. - install 3,000' underground stormwater system and add (12) catch basins	$500,000	12 wks	Public Works	Completed
	5	West Grand Ave. area - conduct hydrologic and hydraulic analysis to assess means to mitigate stormwater related flooding	$28,000	16 wks	Public Works	Completed
	6	Milliken St. area - conduct hydrologic and hydraulic analysis to assess means to mitigate stormwater related to flooding	$24,000	16 wks	Public Works	In process
	7	Tripoli Ave. - stormwater improvements	$187,500	16 wks	Public Works	Completed
	8	Tunis Ave. - stormwater improvements	$359,500	6 mths	Public Works	Completed
	9	Hampton Ave. - stormwater improvements	$187,500	16 wks	Public Works	Completed
	10	Roanoke Ave. - stormwater improvements	$187,500	16 wks	Public Works	Completed
	11	Puffin St. - drainage system	$48,100	2 mths	Public Works	Completed
	12	First St. - drainage system	$83,800	12 wks	Public Works	Starting in July 2016

Back to Agenda

CITY/TOWN		PROJECT LIST - IN PRIORITY ORDER	COST	TIMELINE	RESPONSIBLE AGENT	PROJECT STATUS
PARSONSFIELD	1	Road Between the Ponds - remove pavement, widen road width, upgrade culverts, ditch and repave. Removal of trees and resetting of telephone poles required.	$75,000	6 wks	Road Commissioner	New Project
	2	Lombard Hill Rd - Ditch and line 2,000'	$20,000	3 wks	Road Commissioner	Still Planning Phase - seeking funding
	3	Middle Rd - add gravel, regrade, ditch and line 3,000'	$45,000	3 wks	Road Commissioner	Still Planning Phase - seeking funding
	4	Hasty Rd - ditch and line 2,000'	$20,000	3 wks	Road Commissioner	Still Planning Phase - seeking funding
	5	Devereux Rd - ditch and line 2,000' & upsize culvert to 18' X 36'	$22,000	3 wks	Road Commissioner	Still Planning Phase - seeking funding
	6	Pendexter Rd - upsize culvert to 42" X 36'; raise road elevation 10", add cross culverts as needed, ditch	$25,000	4 wks	Road Commissioner	Still Planning Phase - seeking funding
	7	Benson Rd - add (3) 18" X 32' culverts	$4,000	2 wks	Road Commissioner	Still Planning Phase - seeking funding
	8	Mudget Meadow Rd - upsize (4) culverts to 18" X 36'	$5,000	2 wks	Road Commissioner	Still Planning Phase - seeking funding
	9	Chase Rd - ditch and line 1,000' & add 18" X 36' culvert	$11,000	2 wks	Road Commissioner	Still Planning Phase - seeking funding
	10	Milliken Rd - ditch and line 1,000' & upsize culvert to 42" X 36'	$14,000	2 wks	Road Commissioner	Still Planning Phase - seeking funding
	11	Cross Rd - ditch and line 2,000' & upsize (3) culverts to 18" X 36'	$23,000	3 wks	Road Commissioner	Still Planning Phase - seeking funding
	12	New County Rd - ditch and line 1,000' & upsize culvert to 42" X 36' and add (4) 18" X 36'	$13,000	2 wks	Road Commissioner	Still Planning Phase - seeking funding
	13	Mountain Rd - ditch and line 1,000' & upsize (3) culverts to 18" X 36'	$13,000	2 wks	Road Commissioner	Still Planning Phase - seeking funding
	14	Maplecrest Rd - ditch and line 1,000' & upsize (3) culverts to 18" X 36'	$13,000	2 wks	Road Commissioner	Still Planning Phase - seeking funding
	15	Dearborn Rd - ditch and line 500' & add 18" X 36' culvert	$6,000	1 wk	Road Commissioner	Still Planning Phase - seeking funding
	16	West Rd - add 18" X 36' culvert	$1,500	1 wk	Road Commissioner	Still Planning Phase - seeking funding
	17	Lost Mile Rd - ditch and line 500'	$5,000	1 wk	Road Commissioner	Still Planning Phase - seeking funding

Back to Agenda

CITY/TOWN		PROJECT LIST - IN PRIORITY ORDER	COST	TIMELINE	RESPONSIBLE AGENT	PROJECT STATUS
PARSONSFIELD	18	Dutch Rd - ditch and line 1,000'	$10,000	2 wks	Road Commissioner	Still Planning Phase - seeking funding
	19	Chick Rd - ditch and line 1,500'	$15,000	2 wks	Road Commissioner	Still Planning Phase - seeking funding
	20	Stacey Lane - ditch and line 500'	$5,000	1 wk	Road Commissioner	Still Planning Phase - seeking funding
	21	Arthur Morrill Rd - ditch and line 500'	$5,000	1 wk	Road Commissioner	Still Planning Phase - seeking funding
	22	Bob Day Rd - ditch and line 1,000'	$10,000	2 wks	Road Commissioner	Still Planning Phase - seeking funding
	23	Smith Rd - ditch and line 1,000'	$10,000	2 wks	Road Commissioner	Still Planning Phase - seeking funding
	24	Pratt Rd - ditch and line 1,000'	$10,000	2 wks	Road Commissioner	Still Planning Phase - seeking funding
	25	Woodward Rd - ditch and line 500'	$5,000	1 wk	Road Commissioner	Still Planning Phase - seeking funding
	26	Hobbs Swamp Rd - ditch and line 500'	$5,000	1 wk	Road Commissioner	Still Planning Phase - seeking funding
	27	Stagecoach Rd - ditch and line 500'	$5,000	1 wk	Road Commissioner	Still Planning Phase - seeking funding
	28	Kezar Mountain Road - regravel road, ditch and line 5,000' rt & lt & upsize (3) culverts to 18" X 36'	$35,000	4 wks	Road Commissioner	Still Planning Phase - seeking funding
	29	Long Pond Rd - removal of roughly 200 lf of ledge, widen road, reshape ditches, pave widened portion	$55,000	8 wks	Road Commissioner	Still Planning Phase - seeking funding
	30	Joe Berry Rd - regravel, reshape and ditch 1,800' of roadway	$35,000	4 wks	Road Commissioner	Still Planning Phase - seeking funding
SACO	1	York County Emergency Shelter - install french drain 500' & install redundant sump pump in basement	$18,000	3 wks	Public Works	Still Planning Phase - seeking funding
	2	Route 1 - clean & improve 1,000' ditch line S of Route 1	$3,000	1 wk	Public Works	State Road need to work with DOT – Ongoing work
	3	Heath Rd. - install underground drainage 18" X 500', rip rap	$15,000	4 wks	Public Works	Still Planning Phase - seeking funding
	4	Ocean Park Rd. - upgrade aging undersized drainage system to remove barrier to natural flow	$250,000	8 wks	Public Works	New Project

Back to Agenda

		volumes				
SACO	5	Cleveland St. and Summer St. – mitigate current surface flooding by upsizing pipe system/improve channel flow	$100,000	4 wks	Public Works	New Project
SANFORD	1	Gowan Park Drive – upsize (2) 24" X 40' cmps to 36" X 40' cmps, elevate 500' X 3' X 24' and repave	$32,000	4 wks	Public Works	Still Planning Phase - seeking funding
	2	Walnut Brook/Twombly Rd – upsize and realign existing 18" X 40' culvert with 30" X 150' culvert	$22,000	3 wks	Public Works	Completed
	3	Rosenfield Development – install (10) catch basins & 2,000' X 24", 48' X 1,200' underground drainage	$205,000	8 wks	Public Works	Removed from list – deemed impractical
	4	North St – install (10) catch basins & upsize 12" X 600' to 18" X 600' underground drainage	$127,000	8 wks	Public Works	Still deferred – seeking funding
	5	Cottage Street (North Ave to Island Ave) upgrade culverts	$25,000	4 wks	Public Works	Planning Phase
	6	Mousam Way Trail – upgrade granite culvert to either box culvert or metal arch	$35,000	4 wks	Public Works	Planning Phase
	7	Stiles Ave/Howard St - upsize twin 36" X 150' rcp with 50" x 150' rcp	$29,000	3 wks	Public Works	Still Planning Phase - seeking funding
	8	Deering Neighborhood Rd - upsize 18" to 36" x 150' culvert and repave 8' X 40'	$21,000	3 wks	Public Works	Completed
	9	Sam Allen Rd - upsize culvert to either box culvert or pipe arch	$35,000	2 wks	Public Works	Completed
	10	Whiches Mills Rd - upsize and realign existing 50" x 40' culvert with 60" x 60' culvert	$14,000	2 wks	Public Works	Still Planning Phase - seeking funding
	11	Sacopee Rd - site 1: upsize existing 48" X 40' culvert with 6' X 4' X 40' box culvert	$30,000	4 wks	Public Works	Still Planning Phase - seeking funding
	12	Sacopee Rd - upsize existing 18" X 40' cmp with 24" X 40' culvert & add additional 18" X 40" culvert approx. 500' from existing pipe	$4,000	2 wks	Public Works	Still Planning Phase - seeking funding
	13	Horace Mills Rd/Sam Allen Rd - install (2) 18" X 40' culverts, ditch 800'	$4,800	2 wks	Public Works	Still Planning Phase - seeking funding
	14	Bernier Rd - bridge upgradement	$250,000	8 wks	Public Works	New Project
	15	Pioneer Avenue Drainage - upgrade existing spiral PVC culvert with HDPE	$250,000	4 wks	Public Works	New Project

Back to Agenda

	16	Bradeen Street Drainage - upgrade storm drains and increase culvert from 8" to 12" minimum	$225,000	4 wks	Public Works	New Project
CITY/TOWN		**PROJECT LIST - IN PRIORITY ORDER**	**COST**	**TIMELINE**	**RESPONSIBLE AGENT**	**PROJECT STATUS**
SHAPLEIGH	1	Culvert program - upsize & resize culverts, add lead-in ditching and stonework where necessary	$120,000	11 mths	Road Commissioner	New Project
	2	Ferguson Rd - add 30" X 40' culvert and rip rap	$2,800	1 wk	Road Commissioner	Completed June of 2011
	3	Cross Rd - upsize to 40" X 30' squash pipe	$3,000	1 wk	Road Commissioner	Completed June of 2011
SOUTH BERWICK	1	Clarks Lane (Quamphagan Brook Watershed) - perform H & H study to correct runoff flooding to driveways near Marshwood High School	$30,000	3 wks	Contractor	Still Planning Phase - seeking funding
	2	Thrurrell Rd - elevate 800' X 22' X 8' stabilize banks and add relief culverts as needed, repave	$100,000	8 wks	Public Works	Still deferred; lack of funds
	3	Emery's Bridge Rd @ White Marsh - upsize culvert and raise road bed	$600,000	n/a	Public Works	Still deferred; lack of funds
	4	Lower Main St - upgrade drainage system	$100,000		Public Works	Planning Phase
	5	Belle Marsh Rd - ditch 1,000'	$2,500	1 wk	Public Works	Still Planning Phase - seeking funding
	6	Pond Road by Love's Brook - elevate road 2' X 1,000' to reduce flooding hazard		n/a	Public Works	Completed with 406 mitigation from DR1693
	7	Hopper Sands Rd along Great Works River - buy out house and restore site	$150,000	5 mths	Town Manager	Still deferred; lack of funds
WATERBORO	1	Survey culverts and improve ditching & stonework; upsize & upgrade old culverts	$254,000	1 year	Road Commissioner	New Project
	2	Chadborn Hill Rd - ditch and line 300' or roadway	$3,000	1 wk	Road Commissioner	Completed
	3	Chadborn Hill Rd - reset lower and rip rap intake and outfall (3) 15" X 40' culverts	$2,500	1 wk	Road Commissioner	Completed
WELLS	1	Coles Hill Rd - install 48" X 40' smoothbore overflow culvert, or as determined by H&H study	$6,000	1 wk	Public Works	Still Planning Phase; seeks funding
	2	Post Rd @ Cozy Corner @ Merriland River - upgrade existing concrete structure with a wider taller structure, raise Rt. 1 and Rt. 9 travel way	$1,200,000	1 year	Public Works & Contractor	Planning Phase - seeking funding

Back to Agenda

	3	Bragdon Rd @ Merriland River - upsize culvert and elevate roadway	$35,000	4 wks	Public Works	Planning Phase
CITY/TOWN		**PROJECT LIST - IN PRIORITY ORDER**	**COST**	**TIMELINE**	**RESPONSIBLE AGENT**	**PROJECT STATUS**
WELLS	4	Deerwood Park - improve drainage and create retention structures	$281,482	4 mths	Public Works	HMGP 1953 Completed 2012
	5	Furbish Rd - elevate roadway	$125,000	4 mths	Public Works	Planning Phase
	6	Bald Hill Rd - upsize culverts and elevate roadway	$56,000	4 mths	Public Works	Completed
	7	Wire Rd - improve drainage	$20,000	4 wks	Public Works	Planning Phase
YORK	1	Payne Rd - upsize culverts on Kittery/York line	$100,000	2 mths	Public Works	New Project
	2	Sentury Hill/York St - drainage improvement	$100,000	3 mths	Public Works	Still in Planning Phase
	3	Greenleaf Parsons Rd - upsize existing culvert with larger box style culvert	$200,000	1 mth	Public Works	Hydrology done - still planning
	4	Pine Hill Rd at Teeny Brook - upsize culvert	$25,000	2 wks	Public Works	Still in Planning Phase
	5	Shore Rd (Keyes Pond to Ogunquit) - line drainage system, upgrade and upsize capacity	$75,000	2 wks	Public Works	Still in Planning Phase
	6	Winterbrook Drive Development - drainage improvements, upsize system and crossings	$225,000	3 mths	Public Works	Still in Planning Phase - Partially Funded
	7	Long Beach Ave/Sea Rose Lane - outfall culvert upgradement - Outflow J	$500,000	6 mths	Public Works	Town/Grant Funded - PE Stage
	8	Long Beach Ave/Anchorage Motel Drainage Improvement - Outflow L	$350,000	6 mths	Public Works	On-going; started Fall of 2015
	9	Mitchell/Ridge Rd - drainage system upgrade	$450,000	6 mths	Public Works	Completed
	10	Main Street/Bayhaven - Drainage improvement	$750,000	3 mths	Public Works	Town Funded & Permitted for 2015/2016
	11	York Village Square - drainage improvements, upsize system and crossings	$175,000	1 mth	Public Works	Ongoing/grant funded
	12	Rte. 91/Bean Hollow Crossing pipe - ugrade and enlarge pipe and drainage improvements	$125,000	3 mths	Public Works	Funded - Planning Phase/Hydrology done

Back to Agenda

CITY/TOWN		PROJECT LIST - IN PRIORITY ORDER	COST	TIMELINE	RESPONSIBLE AGENT	PROJECT STATUS
	13	Seabury Rd - culvert enlargement and improve drainage near Carwin Lane	$20,000	2 wks	Public Works	Town Funded
	14	Broadway Ave Drainage System Improvements - Outflow G2 in Town Plan	$900,000	6 mths	Public Works	Town Funded - Still in PE Stage
	15	York St (cont. Long Beach Ave) - drainage system upgrade - Outflow P in town plan	$450,000	6 mths	Public Works	Town Funded - 2015 Construction
	16	Birch Hill Rd @ Shorey's Swamp - upgrade box culvert with (2) 4' culverts	$290,000	1 mth	Public Works	Completed
	17	Orchard Farm/Greenacre Drive Development - drainage improvements, upsize culverts and crossings	$125,000	3 mths	Public Works	Completed
	18	Little River Drainage Canal - cleaning of debris Rt. 95 to the sea - flows into Outflow O	$50,000	1 mth	Public Works	Completed
	19	Pine Hill Rd @ Jade Lane - drainage improvement	$50,000	2 wks	Public Works	Completed
	20	Shore Rd (near Cliff House) - upsize culvert from 18" to 30"	$8,000	1 wk	Public Works	Completed
YORK	21	Agamenticus Ave (South Side) - install collection pool and new 18" culvert to divert water coming down hill	$19,000	2 wks	Public Works	Completed
	22	York Beach Square (Commercial District drainage system upgrade) - Penstock 2 separate projects - Outfall G1 in town plan	$2,500,000	6 mths	Public Works	Completed
	23	Long Beach Ave (northern end by Cutty Sark Motel) - drainage system upgrade - Outflow 1 in town plan	$350,000	8 mths	Public Works	Completed
	24	Ridge Rd (at Spring Point Estates) upgrade and size culverts - flows into Outflow K	$25,000	2 wks	Public Works	Completed
	25	Barrel Lane (between Rt. 1A & Rt. 103) Drainage System Upgrade - Outflow R in Town Plan	$280,000	6 mths	Public Works	Completed
	26	Roaring Rock Road - Upsize to 12" X 200' with 36" X 200' culvert	$35,000	6 wks	Public Works	Completed
	27	York St/Raydon Rd - upsizing of existing culvert cross culvert system	$25,000	1 wk	Public Works	Completed
	28	Reserve St/Sea Rose - parallel drainage system upgrade	$150,000	1 mth	Public Works	Completed

Back to Agenda

YORK	29	North Berwick Rd - add additional 4' culvert	$10,000	1 wk	Public Works	Completed
	30	Logging Road - drainage improvements; enlarged culvert system	$25,000	3 mths	Public Works	Completed
	31	Birch Hill Rd/Emos Way - upsize 2' to 3' and add additional 2' overflow with present 3' culvert	$10,000	1 wk	Public Works	Completed

Back to Agenda

15. Identification and Analysis of Mitigation Actions: National Flood Insurance Program (NFIP Compliance	
Requirement §201.6(c)(3)(ii): (The mitigation strategy) must also address the jurisdiction's participation in the National Flood Insurance Program (NFIP), and continued compliance with NFIP requirements, as appropriate.	
Elements	**A.** Does the new or updated plan describe the jurisdiction's participation in the NFIP?
	B. Does the mitigation strategy identify, analyze and prioritize actions related to continued compliance with the NFIP?

A. All municipalities within York County participate in NFIP. Below are the CID # and Program Dates.

Municipality	CID #	Program Date	CRS Class & Current Effective Date
Acton, Town of	230190	6/5/1985	
Alfred, Town of	230191	7/16/1990	Class 8 – 10-1-93
Arundel, Town of	230192	4/1/1987	
Berwick, Town of	230144	8/5/1991	
Biddeford, City of	230145	5/15/1984	
Buxton, Town of	230146	7/5/1982	
Cornish, Town of	230147	3/18/1980	
Dayton, Town of	230148	12/28/1998	
Eliot, Town of	230149	6/5/1989	
Hollis, Town of	230150	7/19/1982	
Kennebunk, Town of	230151	1/19/1983	
Kennebunkport, Town of	230170	4/18/1983	
Kittery, Town of	230171	7/5/1984	
Lebanon, Town of	230193	9/13/2002	
Limerick, Town of	230194	2/1/1985	
Limington, Town of	230152	4/1/1982	
Lyman, Town of	230195	5/15/1991	
Newfield, Town of	230196	6/5/1985	
North Berwick, Town	230197	2/1/1985	
Ogunquit, Town of	230632	7/5/1983	Class 8 – 5-1-03
Old Orchard Beach, Town of	230153	7/5/1984	Class 8 – 10-1-09
Parsonsfield, Town of	230154	12/18/1979	
Saco, City of	230155	1/5/1984	Class 8 – 10-1-99
Sanford, Town of	230156	3/4/1985	
Shapleigh, Town of	230198	8/5/1985	
South Berwick, Town	230157	6/5/1985	Class 8 – 5-1-05
Waterboro, Town of	230199	2/1/1985	
Wells, Town of	230158	7/5/1983	Class 10 ~~9~~ – 10-1-11
York, Town of	230159	12/15/1983	Class 8 – 10-1-01

CRS data source: Table 3 – FEMA June 2014 Community Rating System Report

Back to Agenda

All 29 municipalities in York County participate in the National Flood Insurance Program (NFIP). Seven communities go beyond the NFIP's minimum standards for floodplain management and participate in the Community Rating System (CRS). Discounts may be available on flood insurance premiums for policy holders in those communities.

16. Implementation of Mitigation Actions	
Requirement §201.6(c)(3)(iii): (The mitigation strategy section shall include) an action plan describing how the actions identified in section (c)(3)(ii) will be prioritized, implemented and administered at the local jurisdiction. Prioritization shall include a special emphasis on the extent to which benefits are maximized according to a cost benefit review of the proposed projects and their associated costs.	
Elements	**A.** Does the new or updated mitigation strategy include (a discussion abut) how the actions are prioritized? (For example, is there a discussion of the process and the criteria used?)
	B. Does the new or updated mitigation strategy address how the actions will be implemented and administered, including the responsible department, existing and potential resources and the timeframe to complete each action?
	C. Does the new or updated prioritization process include an emphasis on the use of a cost-benefit review to maximize benefits?
	D. Does the updated plan identify the completed, deleted or deferred mitigations as a benchmark for progress, and if actions are unchanged (i.e., deferred) does the updated plan describe why no changes occurred?

A. See introductory statements to Prioritized Mitigation Projects for a discussion about how these projects were prioritized.

B. See Prioritized Mitigation Projects for a project-by-project summary of costs, timeframe and responsible party.

C. See the Goal statement at the beginning of the Prioritized Mitigation Projects table. MEMA will utilize the cost benefit analysis prepared by applicants when they apply for mitigation funding.

D. See the Status column in Table 1, General Goals, Objectives and Mitigation Actions. See the Status column in Table 2, Summary of Hazard Mitigation Projects by Municipality.

Back to Agenda

6. PLAN MAINTENANCE PROCEDURES

Monitoring, Evaluating and Updating the Plan
Requirement §201.6(c)(4)(i): (The plan shall include a plan maintenance process that includes) a section describing the method and schedule of monitoring, evaluating, and updating the mitigation plan within a five-year cycle.

A. MONITORING THE PLAN

During the five year life cycle of the Plan, the York County EMA will monitor its progress through monthly meetings with local officials, after any severe storm event, or after a federally declared disaster. Prior to the start of the update process, the York County EMA will distribute a survey form to each of the 29 local EMA directors in the county. This form will ask each director to comment on how his or her community has or has not addressed the Plan's objectives. The EMA will take the individual municipal results and compile an Evaluation Summary that will be distributed to the officials and the Local Emergency Directors of each community. The EMA also intends to work with MEMA officials and SMPDC in periods following disasters to better understand how the region can mitigate future damages to roads, critical facilities, residential structures and businesses."

The Evaluation Summary matrix was updated and moved to the Strategy Section.

B. EVALUATING THE PLAN

Between the third and fourth year of the five-year planning cycle, the York County EMA will convene a meeting of the Hazard Mitigation Planning Team to review the risk assessment and strategy sections of the Plan to determine if this information should be updated or modified, and if additional hazards should be profiled. The Planning Team will also review the County EMA's status report on implementation, as well as each mitigation action to determine its continued relevance to changing situations and land developments in the County, as well as changes in Federal or State policy, and to ensure that each action is addressing current and expected conditions.

C. UPDATING THE PLAN

At the beginning of the fourth year of implementation of this Plan, the County EMA will convene a meeting of the local EMA Directors, who will serve as liaisons to other municipal staff and officials. Based on the evaluation of the Plan, proposed updates will be prepared for the following five-year period. The County EMA and the County Hazard Mitigation Planning Team will rely on EMA Directors for input, as well as public input obtained through public workshops, meetings, social media, mailings, and phone-in meetings. Proposed changes to the Plan will be submitted to the Maine Emergency Management Agency for initial review and then to the Federal Emergency Management Agency for review and approval pending adoption.

Back to Agenda

19. Incorporation into Existing Planning Mechanisms	
Requirement §201.6(c)(4)(ii): (The plan shall include a) process by which local governments incorporate the requirements of the mitigation plan into other planning mechanisms such as comprehensive or capital improvement plans, where appropriate.	
Elements	**A.** Does the new or updated plan identify other local planning mechanisms available for incorporating the mitigation requirements of the mitigation plan?
	B. Does the new or updated plan include a process by which the local government will incorporate the mitigation strategy and other information contained in the plan (e.g., risk assessment) into other planning mechanisms, when appropriate?
	C. Does the updated plan explain how the local government incorporated the mitigation strategy and other information contained in the plan (e.g., risk assessment) into other planning mechanisms, when appropriate?

A. Identification of local planning mechanisms.

County government is very limited in scope and authority in the State of Maine and does not have the staff or fiscal capabilities to control planning or development within municipalities. In Maine, most government authority is derived from State statutes and rules and with municipal "Home Rule" ordinances."

There are a total of 29 municipalities in the County. Available planning mechanisms at the municipal level include:

- Local flood plan management – All communities in York County are in the NFIP and have adopted ordinances for managing development in flood-prone areas
- Shoreland zoning – all communities in York County are required to have a shoreland zoning ordinance, whether adopted by the municipality or imposed by the Maine DEP
- Local comprehensive plans (most of the municipalities have adopted comprehensive plan although updates are more difficult for smaller communities with fewer resources)
- Capital improvement plans (some of the larger municipalities have capital improvement plans; most of the smaller ones do not)
- Road maintenance planning efforts
- Emergency management and mitigation planning
- Fire prevention planning and coordination, including participation in mutual aid agreements, training and exercises
- Grant writing (some of the County's municipalities have been active in applying for grants to address municipal priorities).

There were very few ordinance-related mitigation measures identified by the York County Hazard Mitigation Team. The majority of the mitigation measures that were identified, and all of the actions selected by individual communities are either structural, public educational, or emergency planning measures.

Back to Agenda

B. Process for incorporating mitigation strategies and related information into local planning mechanisms.

County government does not have the authority to control local planning mechanisms. However, the County EMA Director can provide information to local units of government, as well as technical assistance.

Following approval of the Plan by FEMA, the County EMA will send a copy to all municipalities in the County with a recommendation that local comprehensive planning efforts, municipal road maintenance planning efforts, emergency management programs and local fire prevention programs will be utilized to their greatest extent to complete the community's mitigation measures.

The County EMA Office will assist the municipal officers in implementing their selected mitigation measures. The County EMA Office will also continue to assist municipalities with the completion of FEMA Hazard Mitigation Assistance (HMA) grant applications for cost beneficial projects.

C. Explanation of how local governments incorporated strategies and other information.

In addition to the planning mechanisms described on the previous page, the County EMA and all municipal EMAs have continued to advise their respective jurisdictions on pending hazard events, such as winter storms, as well as posted public service announcements on its website as well as in public locations such as municipal offices.

The County EMA has notified municipal EMAs and local officials of hazard mitigation workshops such as those related to the Pre-Disaster and Hazard Mitigation Grant programs, and workshops with hazard mitigation content such as those sponsored by Maine's Local Roads Center that deal with the use of geo-textiles.

For information of hazard events, posted public announcements and/or workshops, visit York County's EMA website at: http://www.yorkcountyme.gov

The cities of Biddeford and Saco, and the Town of Old Orchard Beach) have begun working cooperatively to address the impacts of sea level rise. They have formed the Sea Level Adaptation Working Group (SLAWG) for the purpose of developing and implementing regional climate change adaptation strategies, to respond to rising sea levels and to become more resilient to coastal storms.

According to FEMA's June 2014 Community Rating System reports, there are seven towns in York County that participate the National Flood Insurance Program's Community Rating System (CRS). See table below with rating class of "8". CRS is a voluntary incentive program that recognizes and encourages community floodplain management activities that exceed the minimum NFIP requirements. These communities must continue to implement its credited activities to keep its CRS classification.

Back to Agenda

Community Number	Community Name	Current Class
230191	Alfred, Town of	8
230632	Ogunquit, Town of	8
230153	Old Orchard Beach, Town of	8
230155	Saco, City of	8
230157	South Berwick, Town of	8
230158	Wells, Town of	10
230159	York, Town of	8

D. CONTINUED PUBLIC INVOLVEMENT

20. Continued Public Involvement	
Requirement §201.6(c)(4)(iii): (The plan maintenance process shall include a) discussion on how the community will continue public participation in the plan maintenance process.	
Elements	A5. Is there a discussion on how the communities will continue public participation in the planning process?
	A6. Is there a description of the method and schedule for keeping the plan current…monitoring, evaluating, updating…

A. Public participation.

York County is committed to involving the public directly in the continued reshaping and updating of the Hazard Mitigation Plan. The Hazard Planning Team is responsible for reviewing and updating the Plan. Although the members of the Planning Team represent the public to some extent, all meetings will continue to be open to the public for opportunities to comment on and provide meaningful input on the Plan.

Copies of the Plan will be issued to the municipal Emergency Management Directors and kept on hand at all participating municipal offices in the County. The County EMA Office will post the Plan on its web site. The Plan will include the address and phone number of the York County EMA Office that is responsible for keeping track of public comments on the Plan.

The York County EMA Office will also provide a public comment period at each meeting of the Hazard Mitigation Team. The purpose of the public comment period is to provide a public forum for input. The York County EMA Office will be responsible for providing public notice for each meeting of the Hazard Planning Team, for hosting the meeting, and for including information about the public comment period.

In York County, hazard mitigation is more than a written plan. It is woven into the overall efforts to have more resilient communities through a variety of means:

- Having and maintaining an active presence through its website and social media

Back to Agenda

- Maintaining and updating its communications systems
- Working with its Regional Planning Commission
- Sharing its meeting space with local officials
- Continuing to work with other counties in outreach efforts

B. Keeping the plan current

See discussion on page 6-1 for monitoring, evaluating and updating the plan.

Back to Agenda

REQUEST FOR ACTION BY BOARD OF SELECTMEN

DATE SUBMITTED: September 30, 2016	☒ ACTION
DATE ACTION REQUESTED: October 3, 2016	☐ DISCUSSION ONLY
SUBJECT: Abatement Request	

DISCUSSION OF OPTIONS AVAILABLE TO THE BOARD: Grant, partially grant, or deny the Abatement Request discussed in Executive Session

RECOMMENDATION:

PROPOSED MOTION: I move to grant/deny/partially grant an Abatement Request for Case #16-05 made pursuant to MRSA Title 36 § 841.2 in the sum of $____ for Tax Year_____.

FISCAL IMPACT:

DEPARTMENT LINE ITEM ACCOUNT:

BALANCE IN LINE ITEM IF APPROVED:

PREPARED BY: _____ REVIEWED BY: _____

Back to Agenda

REQUEST FOR ACTION BY BOARD OF SELECTMEN

DATE SUBMITTED: September 30, 2016	☒ ACTION
DATE ACTION REQUESTED: October 3, 2016	☐ DISCUSSION ONLY
SUBJECT: Abatement Request	

DISCUSSION OF OPTIONS AVAILABLE TO THE BOARD: Grant, partially grant, or deny the Abatement Request discussed in Executive Session

RECOMMENDATION:

PROPOSED MOTION: I move to grant/deny/partially grant an Abatement Request for Case #16-06 made pursuant to MRSA Title 36 § 841.2 in the sum of $____ for Tax Year_____.

FISCAL IMPACT:

DEPARTMENT LINE ITEM ACCOUNT:

BALANCE IN LINE ITEM IF APPROVED:

PREPARED BY: _____ REVIEWED BY: _____

Back to Agenda

REQUEST FOR ACTION BY BOARD OF SELECTMEN

DATE SUBMITTED: September 28, 2016	☒ ACTION
DATE ACTION REQUESTED: October 3, 2016	☐ DISCUSSION ONLY
SUBJECT: Pole Location Permits	

DISCUSSION OF OPTIONS AVAILABLE TO THE BOARD: The permit request has been reviewed by Director of Public Works Dean Lessard and an onsite inspection has been completed; Mr. Lessard recommend approval of the permit requested by Central Maine Power.

RECOMMENDATION: Approve the Pole Location Permit

PROPOSED MOTION: I move to approve the Pole Location Permits for 1 pole on Beech Ridge Road, 1 pole on Clay Hill Road, and 2 poles on Witchtrot Road as described in the applications from Central Maine Power.

FISCAL IMPACT: N/A

DEPARTMENT LINE ITEM ACCOUNT: N/A

BALANCE IN LINE ITEM IF APPROVED: N/A

PREPARED BY: Melissa M. Avery REVIEWED BY: _____

Melissa M. Avery, Assistant to the Town Manager

Back to Agenda

Form 4501

Notification: 10300250926

Work Order: 001000107798

CENTRAL MAIN POWER COMPANY
APPLICATION FOR POLE LOCATION OR UNDERGROUND LOCATION

In the City/Town of: York, Maine

To the:
- [ ] City
- [ ] Town
- [ ] County of: York, Maine

[x] Central Maine Power hereby applies for permission to:

- [x] Construct and maintain poles together with attached facilities and appurtenances upon, along or across certain streets and highways in said City/Town as described below.
- [ ] Construct and maintain buried cables, conduits, manholes and handholes, together with wire and cables, transformers, cutouts, and other equipment therein, under, along, and across certain streets and highways in said City/Town as described below.

[x] Central Maine Power Company and Northern New England Telephone Operations LLCME

Jointly apply for permission to construct and maintain poles together with attached facilities and appurtenances upon, along or across certain streets and highways in said City/Town as described below.

1. Starting Point: 31
2. Road (State & CMP): Beach Ridge Road/Beech Ridge Road
3. Direction: Northwesterly
4. Distance: 76' feet
5. Number of Poles: 1

[x] Overhead wires shall have a minimum clearance of 18 feet over the public highway and be constructed to conform with the requirements of the National Electric Safety Code.

[ ] Buried cable facilities shall be placed at a minimum depth of 36 inches under pavement and 30 inches elsewhere and be constructed to conform with the requirements of the National Electric Safety Code.

Any person, firm, or corporation to be adversely affected by this proposed location shall file a written objection with the State Department of Transportation, City, Town or County stating the cause of said objection within fourteen (14) days after the publication of this notice or ninety (90) days after installation of facilities without publication.

[ ] Public Notice of this application has been given by publishing the text of the same

[x] Not Published

In:

On:

CENTRAL MAINE POWER COMPANY

By: Elaine Titherington Date: 09/06/2016

Northern New England Telephone Operations LLCM

By: [signature] Date: 9/7/2016

Jess Therrault for Jim McLean

Back to Agenda

Form 4502

Notification: 10300250926

CENTRAL MAINE POWER COMPANY

Work Order: 801000107738

SKETCH TO ACCOMPANY APPLICATION FOR POLE OR UNDERGROUND LOCATIONS

Page of

City / Town: York

Date: 09/06/2016

Street: Beach Ridge Road/Beech Ridge Road

By: Elaine Tilherington

Facilities to consist of wood poles and appurtenances with a minimum clearance of wire and cables not less than 21 feet over the public highway, and/or underground facilities to consist of buried cables, conduits, transformers and manholes for operation at 7200 volts to ground single phase. Construction to be suitable for future operation at a voltage not to exceed 22KV to ground single phase. Right-of-way limits indicated are based on the best field information available. Poles/ Pads are staked. For further information call: Elaine Titherington at Central Maine Power Company tel: 207-629-2542 . Pole/Pad spans shown are approximate.

Feet Behind Curb	Feet Behind Guard Rail	Feet to C/L Traveled Way	Pole / Pad #		Highway Lines		Pole / Pad #	Feet Behind Curb	Feet Behind Guard Rail	Feet to C/L Traveled Way		Highway Lines	
					Beach Ridge / CMP Beech Ridge Rd York								
					75'		New CMP Pole						
							31H						
							Existing CMP Pole						
							31						

Back to Agenda

Form 4503

Notification: 10300250926

Work Order: 801000107738

LOCATION PERMIT

Upon the Application of Center Maine Power Company and Northern New England Telephone Operations LLC, dated 09/06/2016, asking for permission, in accordance with law, to construct and maintain poles, buried cables, conduits, and transformers, together with attached facilities and appurtenances over, under, along or across certain highways and public roads in the location described in said application, permission is hereby given to construct, reconstruct, maintain and relocate in substantially the same location, said facilities and appurtenances in the City / Town of York, approximately located as follows:

1. Starting Point: 31
2. Road (State & CMP): Beach Ridge Road/Beach Ridge Road
3. Direction: Northwesterly
4. Distance: 75' feet
5. Number of Poles: 1

Facilities shall consist of wood poles and appurtenances with a minimum of wire and cable not less than 18 feet over the public highway and/or buried cables or conduit and appurtenances placed a minimum depth of 36 inches under pavement and 30 inches elsewhere, all in a manner conforming to the National Electric Safety Code.

By:_____

By:_____

By:_____

By:_____

By:_____

Municipal Officers

Office of the _____

Received and Recorded in Book_____, Page_____

Attest:_____

Clerk

Back to Agenda

Form 4503

Notification: 10300220933

Work Order: 801000105202

LOCATION PERMIT

Upon the Application of Center Maine Power Company and Northern New England Telephone Operations LLC,

dated 08/19/2016, asking for permission, in accordance with law, to construct and maintain poles, buried cables, conduits, and transformers, together with attached facilities and appurtenances over, under, along or across certain highways and public roads in the location described in said application, permission is hereby given to construct, reconstruct, maintain and relocate in substantially the same location, said facilities and appurtenances in the City / Town of York, approximately located as follows:

1. Starting Point: 80
2. Road (State & CMP): Ogunquit Road
3. Direction: Clay Hill Road
4. Distance: 40' feet
5. Number of Poles: 1

Facilities shall consist of wood poles and appurtenances with a minimum of wire and cable not less than 18 feet over the public highway and/or buried cables or conduit and appurtenances placed a minimum depth of 36 inches under pavement and 30 inches elsewhere, all in a manner conforming to the National Electric Safety Code.

By:_____

By:_____

By:_____

By:_____

By:_____

Municipal Officers

Office of the _____

Received and Recorded in Book_____, Page_____

Attest:_____

Clerk

Back to Agenda

Form 4501

Notification: 10300220933

Work Order: 801000105202

CENTRAL MAIN POWER COMPANY
APPLICATION FOR POLE LOCATION OR UNDERGROUND LOCATION

In the City/Town of: York, Maine

To the:
- ☐ City
- ☒ Town
- ☒ County of: York, Maine

☒ Central Maine Power hereby applies for permission to:

☒ Construct and maintain poles together with attached facilities and appurtenances upon, along or across certain streets and highways in said City/Town as described below.

☐ Construct and maintain buried cables, conduits, manholes and handholes, together with wire and cables, transformers, cutouts, and other equipment therein, under, along, and across certain streets and highways in said City/Town as described below.

☒ Central Maine Power Company and Northern New England Telephone Operations LLCME jointly apply for permission to construct and maintain poles together with attached facilities and appurtenances upon, along or across certain streets and highways in said City/Town as described below.

1. Starting Point: 80
2. Road (State & CMP): Ogunquit Road
3. Direction: Clay Hill Road
4. Distance: 40' feet
5. Number of Poles: 1

☒ Overhead wires shall have a minimum clearance of 18 feet over the public highway and be constructed to conform with the requirements of the National Electric Safety Code.

☐ Buried cable facilities shall be placed at a minimum depth of 36 inches under pavement and 30 inches elsewhere and be constructed to conform with the requirements of the National Electric Safety Code.

Any person, firm, or corporation to be adversely affected by this proposed location shall file a written objection with the State Department of Transportation, City, Town or County stating the cause of said objection within fourteen (14) days after the publication of this notice or ninety (90) days after installation of facilities without publication.

☐ Public Notice of this application has been given by publishing the text of the same

☒ Not Published

In:

On:

CENTRAL MAINE POWER COMPANY

By: Elaine Titherington Date: 08/19/2016

Northern New England Telephone Operations LLC

By: [signature] Date: 8/23/2016

Jess Theriault for Jim McLean

Back to Agenda

Form 4502

Notification: 10300220933

CENTRAL MAINE POWER COMPANY

Work Order: 801000105202

SKETCH TO ACCOMPANY APPLICATION FOR POLE OR UNDERGROUND LOCATIONS

Page of

City / Town: York

Date: 08/19/2016

Street: Ogunquit Road

By: Elaine Titherington

Facilities to consist of wood poles and appurtenances with a minimum clearance of wire and cables not less than 21 feet over the public highway, and/or underground facilities to consist of buried cables, conduits, transformers and manholes for operation at 7200 volts to ground single phase. Construction to be suitable for future operation at a voltage not to exceed 22KV to ground single phase. Right-of-way limits indicated are based on the best field information available. Poles/ Pads are staked. For further information call: Elaine Titherington at Central Maine Power Company tel: 207-629-2542 . Pole/Pad spans shown are approximate.

Feet Behind Curb	Feet Behind Guard Rail	Feet to C/L Traveled Way	Pole / Pad #		Higway Lines			Pole / Pad #	Feet Behind Curb	Feet Behind Guard Rail	Feet to C/L Traveled Way		Higway Lines	
					Ogunquit Rd/Clay Hill Rd									
								New CMP Pole						
Existing CMP			80					80S	18'					
					18'									

Back to Agenda

Form 4501

2 of 4

Notification: 10300205416

Work Order: 801000084052

CENTRAL MAIN POWER COMPANY
APPLICATION FOR POLE LOCATION OR UNDERGROUND LOCATION

In the City/Town of: York, Maine

To the:
- ☐ City
- ☒ Town
- ☐ County of: York, Maine

☒ Central Maine Power hereby applies for permission to:

☒ Construct and maintain poles together with attached facilities and appurtenances upon, along or across certain streets and highways in said City/Town as described below.

☐ Construct and maintain buried cables, conduits, manholes and handholes, together with wire and cables, transformers, cutouts, and other equipment therein, under, along, and across certain streets and highways in said City/Town as described below.

☒ Central Maine Power Company and Northern New England Telephone Operations LLC jointly apply for permission to construct and maintain poles together with attached facilities and appurtenances upon, along or across certain streets and highways in said City/Town as described below.

1. Starting Point: Pole 12
2. Road (State & CMP): Witchtrot Rd
3. Direction: NE
4. Distance: 300 feet
5. Number of Poles: 2

☒ Overhead wires shall have a minimum clearance of 18 feet over the public highway and be constructed to conform with the requirements of the National Electric Safety Code.

☐ Buried cable facilities shall be placed at a minimum depth of 36 inches under pavement and 30 inches elsewhere and be constructed to conform with the requirements of the National Electric Safety Code.

Any person, firm, or corporation to be adversely affected by this proposed location shall file a written objection with the State Department of Transportation, City, Town or County stating the cause of said objection within fourteen (14) days after the publication of this notice or ninety (90) days after installation of facilities without publication.

☐ Public Notice of this application has been given by publishing the text of the same

☒ Not Published

In:

On:

CENTRAL MAINE POWER COMPANY

By: Daniel R. Sherman Date: Aug 30, 2016

Northern New England Telephone Operations LLC

By: [signature] Date: 8/31/2016

Jess Thomas for Jim McLean

Back to Agenda

Form 4502

3 of 4

Notification: 10300206416

CENTRAL MAINE POWER COMPANY

Work Order: 801000084952

SKETCH TO ACCOMPANY APPLICATION FOR POLE OR UNDERGROUND LOCATIONS

Page of

City / Town: York

Date: Aug 30, 2016

Street: Witchtrot Rd

By: Daniel R. Sherman

Facilities to consist of wood poles and appurtenances with a minimum clearance of wire and cables not less than 21 feet over the public highway, and/or underground facilities to consist of buried cables, conduits, transformers and manholes for operation at 7200 volts to ground single phase. Construction to be suitable for future operation at a voltage not to exceed 22KV to ground single phase. Right-of-way limits indicated are based on the best field information available. Poles/ Pads are staked. For further information call: Daniel R. Sherman at Central Maine Power Company tel: 207-242-0758 . Pole/Pad spans shown are approximate.

Feet Behind Curb	Feet Behind Guard Rail	Feet to C/L Traveled Way	Pole / Pad #		Highway Lines			Pole / Pad #	Feet Behind Curb	Feet Behind Guard Rail	Feet to C/L Traveled Way		Highway Lines	
				Y										
		20'	14	X										
		20'	13	X										
			12	⊗										

N

Back to Agenda

Form 4503

4 of 4

Notification: 10300205416

Work Order: 801000084952

LOCATION PERMIT

Upon the Application of Center Maine Power Company and Northern New England Telephone Operations LLC, dated Aug 30, 2016, asking for permission, in accordance with law, to construct and maintain poles, buried cables, conduits, and transformers, together with attached facilities and appurtenances over, under, along or across certain highways and public roads in the location described in said application, permission is hereby given to construct, reconstruct, maintain and relocate in substantially the same location, said facilities and appurtenances in the City / Town of York, approximately located as follows:

1. Starting Point: Pole 12
2. Road (State & CMP): Witchtrot Rd
3. Direction: NE
4. Distance: 300 feet
5. Number of Poles: 2

Facilities shall consist of wood poles and appurtenances with a minimum of wire and cable not less than 18 feet over the public highway and/or buried cables or conduit and appurtenances placed a minimum depth of 36 inches under pavement and 30 inches elsewhere, all in a manner conforming to the National Electric Safety Code.

By:_____

By:_____

By:_____

By:_____

By:_____

Municipal Officers

Office of the _____

Received and Recorded in Book_____, Page_____

Attest:_____

Clerk

Back to Agenda

REQUEST FOR ACTION BY BOARD OF SELECTMEN

DATE SUBMITTED: September 30, 2016	☒ ACTION
DATE ACTION REQUESTED: October 3, 2016	☐ DISCUSSION ONLY
SUBJECT: Special Event Permit Applications	

DISCUSSION OF OPTIONS AVAILABLE TO THE BOARD: All appropriate departments have been notified and have given approval. Options available to the Board: 1) Approve/Deny all Special Event Permit Applications listed below in one motion. 2) Approve/Deny Special Event Permit Applications in separate motions

RECOMMENDATION: Approve all Special Event Permit Applications in one motion.

PROPOSED MOTION: I move to approve the following Special Event Permit applications subject to all, if any, conditions given by Department Heads:

a. Parks and Recreation's *Festival of Lights Parade* on December 3, 2016
b. Parks and Recreation's *November Lighting of the Nubble* on November 26, 2016
c. Parks and Recreation's *Turkey Trot 5K* on November 26, 2016
d. Parks and Recreation's *Halloween Hop and Parade* on October 28, 2016
e. *KRG Memorial 5K* on October 16, 2016
f. York Art Association's *Fall Art Day* on October 15, 2016
g. First Parish Chruch's *Drive Through Nativity* on December 17, 2016

FISCAL IMPACT: N/A

DEPARTMENT LINE ITEM ACCOUNT: N/A

BALANCE IN LINE ITEM IF APPROVED: N/A

PREPARED BY: Melissa M. Avery

REVIEWED BY: _____

Back to Agenda

Town of York, Maine
Special Event Permit Application

This application for a special event permit is hereby presented to the York Town Manager, 186 York Street, York, ME 03909.

Date: 9/27/16

Name of Event: Festival of Lights Parade

Type of Event: Lighted Parade of Floats and Walkers

Organization Name: Festival of Lights Committee Phone #: 363-1040

Organization Address: 186 York St City York State: ME Zip: 03909

Applicant Name: York Parks & Rec Dept Phone #: 363-1040

Applicant Address: 186 York St City: York State: ME Zip: 03909

Contact Name for Day of Event: Robin Cogger / Lynzi Pacitti Contact Phone # 207 752-1685 / 808-780 4215

Date of Event: December 3rd Day of Week: Saturday

Starting Time: 3:00 Staging / 4:30 Start Ending Time: 5:30 pm

Assembly Area: Axholme Road and Moulton Lane

Dispersal Area: Village Elementary School and beyond

Event Route: Axholme Rd, York St, through York Village to Village Elementary, Organug Rd and/or Route One

Approximate Number of Persons Attending (If more than 500, Insurance coverage needed)
500 +

Describe number of bands, vehicles, signs, floats, or other articles carried or displayed along with method of participation (walking, bicycles, motorcycles etc):
Lighted Parade w/ Floats, walkers, bands & businesses

Describe how group is organized and supervised to insure order: Parks & Rec Staff with York Police Department

Purpose of the Event: Community Holiday Celebration

The above information is true to the best of my knowledge and belief.

Signature of Applicant: [signature] - For Festival of Lights Committee

Back to Agenda

Town of York, Maine
Special Event Permit Application

This application for a special event permit is hereby presented to the York Town Manager, 186 York Street, York, ME 03909.

Date: 9/27/16

Name of Event: November Lighting of the Nubble

Type of Event: Lighting of the Nubble for the Holiday Season

Organization Name: York Parks & Rec Department Phone #: 363-1040

Organization Address: 186 York Street City York State: ME Zip: 03909

Applicant Name: Lynzi Pacitti Phone #: 363-1040

Applicant Address: Same City: State: Zip:

Contact Name for Day of Event: Lynzi Pacitti Contact Phone # 808-780-4215

Date of Event: November 26th Day of Week: Saturday

Starting Time: 3:00 Shuttle | 5:00 Event Ending Time: 6:00 event | 7:00 Shuttle

Assembly Area: Sohier Park (Shuttle will run from Ellis Park)

Dispersal Area: Shuttle from Ellis Park to Sohier Park and back

Event Route: Event takes place at Sohier Park - Shuttle runs participants from Ellis Park to the Nubble and back

Approximate Number of Persons Attending (If more than 500, Insurance coverage needed)
1000 plus

Describe number of bands, vehicles, signs, floats, or other articles carried or displayed along with method of participation (walking, bicycles, motorcycles etc): Santa arrives via YBFD, Entertainment at Gift Shop | Welcome Center

Describe how group is organized and supervised to insure order: Parks & Rec Dept Staff working closely with YPD and YBFD

Purpose of the Event: Free community event to kick off the holiday season.

The above information is true to the best of my knowledge and belief.

Signature of Applicant: - For York Parks & Recreation Department

Back to Agenda

Town of York, Maine
Special Event Permit Application

This application for a special event permit is hereby presented to the York Town Manager, 186 York Street, York, ME 03909.

Date: 9/27/16

Name of Event: Turkey Trot 5K

Type of Event: 5 K Road Race

Organization Name: York Parks & Recreation Phone #: 363-1040

Organization Address: 186 York Street City York State: ME Zip: 03909

Applicant Name: Lynzi Pacitti Phone #: 363-1040

Applicant Address: Same City: State: Zip:

Contact Name for Day of Event: Lynzi Pacitti Contact Phone # 808-780-4215

Date of Event: November 26 Day of Week: Saturday

Starting Time: 9:00 Registration/11:00 Start Ending Time: 1:00 pm

Assembly Area: Village Elementary School

Dispersal Area: Town Hall

Event Route: application / map attached

Approximate Number of Persons Attending (If more than 500, Insurance coverage needed)
300-400 runners

Describe number of bands, vehicles, signs, floats, or other articles carried or displayed along with method of participation (walking, bicycles, motorcycles etc):
Estimated 300-400 runners w/ road marshals on roadway

Describe how group is organized and supervised to insure order: York Park & Rec Staff with volunteers and support from York PD & ambulance Staff

Purpose of the Event: Community Event

The above information is true to the best of my knowledge and belief.

Signature of Applicant: - For York Parks & Recreation Department

Back to Agenda

Town of York Inc. 1652

The York Rotary Club in cooperation with York Parks and Recreation Department presents the Annual

TURKEY TROT

Date:	Saturday, November 26, 2016
Time:	11:00 a.m.
Start at:	York Village Elementary School
Finish at:	York Town Hall
Course:	5K USATF – Certified Road Race
Entry Fee:	$20 mail-in, $22.00 on-line, pre-registration
	$25.00 Race Day space permitting

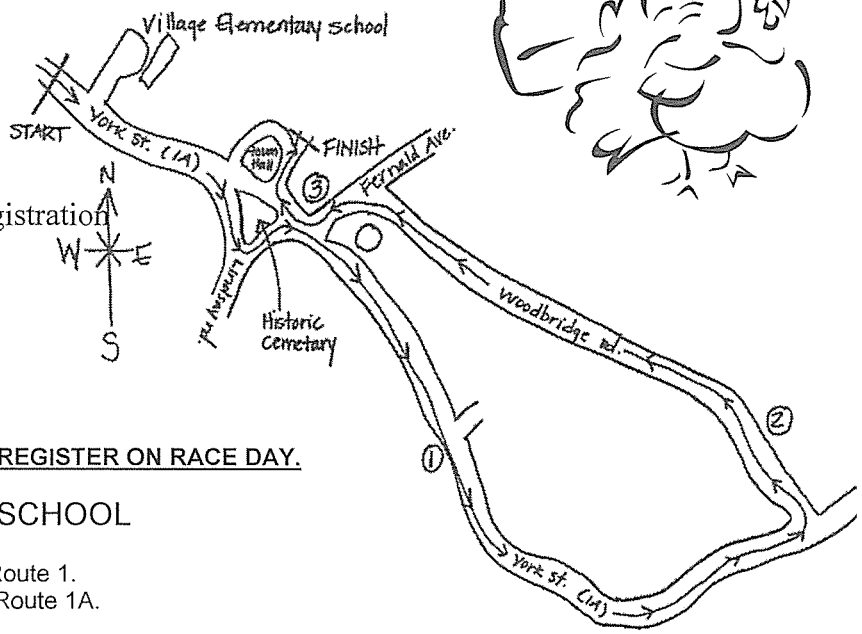

Visit our website at www.yorkparksandrec.org

CHECK-IN & REGISTRATION

Opens 9:30 a.m., Closes 10:45 a.m.

T-shirts to the first 200 registrants!

PRE-REGISTRATION DEADLINE IS NOVEMBER 24th.

ANYONE WANTING TO REGISTER AFTER THAT MUST REGISTER ON RACE DAY.

DIRECTIONS TO VILLAGE ELEMENTARY SCHOOL

124 York Street, York, ME 03909

From I-95: take the York Exit, bear right at the lights onto Route 1.
Travel to the top of the hill and take a left at the lights onto Route 1A.
Village Elementary School is six-tenths of a mile on the left.

Awards will be given to all Division Winners.
Race includes water, snacks, professional timing, and Police.

***NO DOGS PLEASE** for their safety and ours*

ALL RACE PROCEEDS BENEFIT THE YORK FOOD PANTRY AND THE YORK HIGH SCHOOL TRACK AND FIELD PROGRAM – WE INVITE YOU TO BRING A NON-PERISHABLE FOOD ITEM FOR OUR COLLECTION!

Tee Shirt Size

θ S θ M θ L θ XL

Road Race Division

	12 & Under	13 - 17	18 - 29	30 - 39	40 - 49	50 - 54	55 - 59	60 - 64	65 - 69	70 - 79	80 & Up	Walking	Wheelchair
MEN	θ	θ	θ	θ	θ	θ	θ	θ	θ	θ	θ	θ	θ
WOMEN	θ	θ	θ	θ	θ	θ	θ	θ	θ	θ	θ	θ	θ

Make checks payable to:

York Rotary Club

Mail Application to:
York Parks & Recreation Department
186 York St., York, ME 03909

For information on applications, call the York Parks & Recreation Department at 363-1040.

"York Rotary Club Turkey Trot"

Registration Form - Please Print Clearly

Name:_____

Address:_____

Town:_____ State:_____ Zip:_____

Sex:_____ Age:_____ Telephone:_____

Email Address:_____

WAIVER *must be signed

In signing this entry, I for myself, my heirs, executors and administrators, release the manager of the race, all sponsors and promoters, York Rotary Club, the Town of York, for any and all liability in case of death or injury received during participation in this race. In the case of a minor, this entry must be signed by a parent or guardian of entrant.

Signature_____

Parent/Guardian_____

Back to Agenda

Visit our website at www.yorkparksandrec.org

Town of York, Maine
Special Event Permit Application

This application for a special event permit is hereby presented to the York Town Manager, 186 York Street, York, ME 03909.

Date: 9/22/16

Name of Event: Halloween Hop & Parade

Type of Event: Parade

Organization Name: York Parks & Recreation Phone #: 363-1040

Organization Address: 186 York Street City York State: ME Zip: 03909

Applicant Name: Lynzi Pacitti Phone #: 363-1040

Applicant Address: _____ City: _____ State: _____ Zip: _____

Contact Name for Day of Event: Lynzi Pacitti Contact Phone # 808-780-4215

Date of Event: October 28th Day of Week: Friday

Starting Time: 4:30 Parade Starts Ending Time: Parade ends @ VES 4:45

Assembly Area: Town Hall

Dispersal Area: Costume Parade to walk from Town Hall to VES

Event Route: Town Hall, down York Street to VES

Approximate Number of Persons Attending (If more than 500, Insurance coverage needed)
250+

Describe number of bands, vehicles, signs, floats, or other articles carried or displayed along with method of participation (walking, bicycles, motorcycles etc):
Children & family walking costume - no floats or vehicles

Describe how group is organized and supervised to insure order: Parks & Rec Staff with assistance from the YPD

Purpose of the Event: Annual free alternative community Halloween event

The above information is true to the best of my knowledge and belief.

Signature of Applicant: _____

Back to Agenda

Town of York, Maine
Special Event Permit Application

This application for a special event permit is hereby presented to the York Town Manager, 186 York Street, York, ME 03909.

Date: 8/5/16

Name of Event: KRG Memorial 5K

Type of Event: Race

Organization Name: KRG Memorial Phone #: (207) 337-8859

Organization Address: 216 Agatha James Dr. City Kennebunk State: ME Zip: 04043

Applicant Name: Jenna Gavin Phone #: (207) 251-5385

Applicant Address: same as above City: State: Zip:

Contact Name for Day of Event: Cathleen Gavin Contact Phone # (207) 337-8859

Date of Event: 10/16/16 Day of Week: Sunday

Starting Time: 8:00 am Ending Time: 2:00 pm

Assembly Area: Mount Agamenticus

Dispersal Area: Mount Agamenticus

Event Route: parking at York District court, busses to Mt. A, trail at Mt. A then busses back to court House.

Approximate Number of Persons Attending (If more than 500, Insurance coverage needed)
50 - 150 +

Describe number of bands, vehicles, signs, floats, or other articles carried or displayed along with method of participation (walking, bicycles, motorcycles etc):

1 banner displayed, participation is running or walking

Describe how group is organized and supervised to insure order: We have organized Racewire to organize the event.

Purpose of the Event: raise awareness for vets with PTSD and "22 Kill"

The above information is true to the best of my knowledge and belief.

Signature of Applicant: Jenna C Gavin

Back to Agenda

Town of York, Maine
Special Event Permit Application

This application for a special event permit is hereby presented to the York Town Manager, 186 York Street, York, ME 03909.

Date: 9-1-16

Name of Event: Fall Art Day

Type of Event: Art + Craft Workshop for kids

Organization Name: York Art Association Phone #: 413-230-1896

Organization Address: York St City York State: ME Zip: 03909

Applicant Name: Alyssa Wright Phone #: 413-230-1896

Applicant Address: 8 Williams Ave City: York State: ME Zip: 03909

Contact Name for Day of Event: Alyssa Wright Contact Phone # (same as above)

Date of Event: OCT. 15. 2016 Day of Week: Saturday

Starting Time: NOON Ending Time: 8 PM

Assembly Area: York Art Association

Dispersal Area: York Art Association

Event Route: (Potential fire pits TBD)

Feel free to call Alyssa 413-230-1896

Approximate Number of Persons Attending (If more than 500, Insurance coverage needed)

25-30 ppl

Describe number of bands, vehicles, signs, floats, or other articles carried or displayed along with method of participation (walking, bicycles, motorcycles etc):

walking, parking, scarecrow set-up, ballons/banners

Describe how group is organized and supervised to insure order: All board members, several volunteers + parents present for (2) art workshops + then snacks, music + games until 8pm

Purpose of the Event: Art Workshop + Celebration

The above information is true to the best of my knowledge and belief.

Signature of Applicant:

Back to Agenda

Town of York, Maine
Special Event Permit Application

This application for a special event permit is hereby presented to the York Town Manager, 186 York Street, York, ME 03909.

Date: 9/27/16

Name of Event: First Parish Church "Drive Thru ~~[illegible]~~ Nativity"

Type of Event: Community

Organization Name: First Parish Church Phone #: 207-363-3758

Organization Address: York Street City York State: Me Zip: 03909

Applicant Name: Chris Britey Phone #: 207-475-2114

Applicant Address: PO Box 402 City: Cape Neddick State: Me Zip: 03902

Contact Name for Day of Event: _____ Contact Phone # _____

Date of Event: 12/17/16 Day of Week: Saturday

Starting Time: 5:00 pm Ending Time: 8 pm

Assembly Area: First Parish Church

Dispersal Area: First Parish Church

Event Route: Beginning in front of First Parish Church in a horse shoe shape around back of church out to York Street

Approximate Number of Persons Attending (If more than 500, Insurance coverage needed)
300

Describe number of bands, vehicles, signs, floats, or other articles carried or displayed along with method of participation (walking, bicycles, motorcycles etc):
Nativity scenes (7) along the route. Vechicles will process along route.

Describe how group is organized and supervised to insure order: Traffic cops and volunteers to keep traffic flow, insuring order.

Purpose of the Event: Annual gift to community by church.

The above information is true to the best of my knowledge and belief.

Signature of Applicant: [signature]

Back to Agenda