Town of York
186 York Street
York, Maine 03909-1314

Town Manager/ Selectmen (207)363-1000
Town Clerk/ Tax Collector (207)363-1003
Finance/ Treasurer (207)363-1004
Code Enforcement (207)363-1002
Planning (207)363-1007
Assessor (207)363-1005
Police Department (207)363-1031
Dispatch (207)363-2557
York Beach Fire Department (207)363-1014
York Village Fire Department (207)363-1015
Public Works (207)363-1011
Harbor Master (207)363-1000
Senior Center/ General Assistance (207)363-1036
Parks and Recreation (207)363-1040
Fax (207)363-1009 (207)363-1019
www.yorkmaine.org

BOARD OF SELECTMEN'S MEETING AGENDA
7:00PM MONDAY, SEPTEMBER 22, 2014
YORK LIBRARY

Call to Order

Opening Ceremonies

Knights of Columbus Proclamation

A. Minutes
1. September 8, 2014 Meeting Minutes
2. September 15, 2014 Meeting Minutes

B. Chairman's Report

C. Manager's Report

D. Awards
1. ACO Truck Bid Award – Police Department
2. Video System – Police Department
3. One-Ton Pick-Up Truck – Department of Public Works

E. Reports
1. Sohier Park Committee – New Gift Shop
2. Parks and Recreation – Old Burying Grounds Inventory
3. York Village Study Committee – Village Master Plan Update

F. Citizens' Forum – The Citizens' Forum is open to any member of the audience for comments on items listed on this meeting agenda. All comments should be respectful in tone and should be directed to the Chair. Comments should be brief and to the point. Questions that require extended answers or that cannot be readily answered will be referred to the Town Manager for follow-up. Anyone who wishes to submit a written request for future agenda items can do so on the form available at this meeting or may obtain the form through the Town Manager's Office.

G. Approval of Warrant #12

H. Public Hearings

1. Request to Vacate a Portion of Pinecrest Drive Right-of-Way

I. Endorsements

Business Licenses:

1. John and Nancy Stern DBA: Pie In The Sky Bakery, Inc. (Food Service); Located at 1 River Road
2. John Shaw DBA: Frankie and Johnny's (Food Service); Located at 1594 US Route One

J. Old Business

1. Property Redemption: 16 Pine Street
2. Discussion and Possible Action Regarding Purchase of a DPW Plow Truck

K. New Business

1. Policy Discussion in Advance of FY16 Budget Preparation
2. Discussion and Possible Action on a Contract for Invasive Plant Species Control Along Town Roads
3. Discussion and Possible Action on Request to Vacate a Portion of Pinecrest Drive Right-of-Way
4. Discussion of a Request to Vacate a Portion of Anbelwold Circuit and Intervale Road Rights-of-Way
5. Police Station/Connector Road Project
    a. Draft Charter for Building Committee
    b. Discussion and Possible Action about an MPI Grant Application for the Intersection of the Connector Road and Route One
    c. Schedule a Workshop
6. Discussion and Possible Action on the Selectmen's Delegate for MMA Annual Conference
7. Request to Stay in RV During Construction at 42 Old Mountain Road
8. Special Event Permit: Harvest Cup
9. Special Event Permit: Walk MS

L. Other Business

M. Citizens' Forum

Adjourn

Proclamation Announcement

Knights of Columbus Weekend

Columbus Day Weekend

October 11-13, 2014

Whereas, York has been the home of the Star of the Sea Council 11940 of the Knights of Columbus and will join thousands of other local councils in a fundraising effort for special needs children and their families through the event known as the *"Tootsie Roll Drive"*, and;

Whereas, this event is scheduled to take place on the Saturday, Sunday and Monday of Columbus Day weekend, at the entrance of local business establishments, and;

Whereas, the *"Tootsie Roll Drive"* is the Knights of Columbus Nationwide Fundraiser to aid local special needs children and their families, and;

Whereas, it is the goal of the Members of the Local Council 11940 and the Citizens of York to make the *"Tootsie Roll Drive"* a success;

Now therefore, the Board of Selectmen do hereby extend an invitation to all of York's citizens, along with their friends and family, to support this great cause and the efforts of our local Knights of Columbus by patronizing local establishments and supporting the Knights of Columbus *"Tootsie Roll Drive"* for special needs children and their families.

Signed, members of the Board of Selectmen, Town of York,

Mary Andrews, Chair

Robert E. Palmer Jr., Vice Chair

Stephen H. Burns, Interim Town Manager

Torbert Macdonald

Jonathan O. Speers

Mary-Anne Szeniawski, Town Clerk

Ronald Nowell

Back to Agenda

BOARD OF SELECTMEN'S
MEETING MINUTES
7:00PM MONDAY, SEPTEMBER 8, 2014
YORK LIBRARY

Present: Chairman Mary Andrews, Vice-Chairman Robert E. Palmer Jr., Jonathan O. Speers, Torbert Macdonald, Ronald Nowell, Interim Town Manager Stephen H. Burns, Recorder Melissa M. Avery.

Call to Order

Chairman Mary Andrews called the meeting to order at 7:00PM.

Opening Ceremonies

A. Minutes

1. August 25, 2014 Special Meeting Minutes
2. August 25, 2014 Meeting Minutes
3. August 28, 2014 Meeting Minutes
4. September 3, 2014 Meeting Minutes

Moved by Mr. Macdonald, seconded by Mr. Speers to accept the August 25 Special Meeting, August 25 Regular Meeting, August 28 and September 3, 2014 Meeting Minutes, as amended. Vote 5-0, motion passes.

B. Chairman's Report

Chairman Mary Andrews introduced Stephen H. Burns as the Interim Town Manager. Ms. Andrews read off a list of current vacancies on various Town Boards and Committees.

C. Manager's Report

Interim Town Manager Stephen Burns reminded citizens that there has been a positive test for EEE in York and urged everyone to take the necessary precautions to avoid mosquito bites. Mr. Burns also announced on behalf of the Town Clerk that Nomination Papers for the current Budget Committee vacancy are available and need to be returned by September 19, 2014. Mr. Burns announced the York Community Dialogue project for this year – "The Future of

Education in York"—to be held on Saturday, September 20, 2014 in the York High School Cafeteria. Mr. Burns also informed the Board that the Energy Efficiency Steering Committee has discovered Renewable Energy Credits for the Town in the amount of $5,000 associated with the solar project at the York Beach Fire Department. Mr. Burns announced that Melissa M. Avery has been appointed as the Town's Public Access Officer. Mr. Burns also talked about the Maine Toll Plaza issue being brought up again and some of the concerns the citizens have.

D. Awards

1. Introduction of New Police Officer

Police Chief Doug Bracy introduced new Patrolman David McKinnon. Mr. McKinnon recently finished his field training component.

E. Reports

F. Citizens' Forum – The Citizens' Forum is open to any member of the audience for comments on items listed on this meeting agenda. All comments should be respectful in tone and should be directed to the Chair. Comments should be brief and to the point. Questions that require extended answers or that cannot be readily answered will be referred to the Town Manager for follow-up. Anyone who wishes to submit a written request for future agenda items can do so on the form available at this meeting or may obtain the form through the Town Manager's Office.

Public Comment: Helen Rollins
Lew Stowe
Windol Weaver

G. Approval of Warrant #10

Moved by Mr. Macdonald, seconded by Mr. Nowell to approve Warrant #10. Vote 5-0, motion passes.

H. Public Hearings

1. New Business License: The Sand Dollar

Moved by Mr. Macdonald, seconded by Mr. Nowell to open the Public Hearing for a New Business License for The Sand Dollar. Without objection, so ordered.

Public Comment: None

Moved by Mr. Macdonald, seconded by Mr. Nowell to close the Public Hearing for a New Business License for The Sand Dollar. Without objection, so ordered.

2. Petition Submitted for Enactment of an Ordinance Allowing Use of Marijuana by Persons 21 Years of Age or Older in the Town of York

Moved by Mr. Macdonald, seconded by Mr. Nowell to open the Public Hearing for a Petition Submitted for Enactment of an Ordinance Allowing Use of Marijuana by Persons 21 Years of Age or Older in the Town of York. Without objection, so ordered.

Public Comment: Sally Manninen
Sherry Dabiere
David Boyer
Jim Bartlett
David Brinkman
Sherry Dabiere

Moved by Mr. Speers, seconded by Mr. Macdonald to close the Public Hearing for a Petition Submitted for Enactment of an Ordinance Allowing Use of Marijuana by Persons 21 Years of Age or Older in the Town of York. Without objection, so ordered.

3. Ordinance Amendment to be Considered for November 2014 General Referendum: Require Septic System Inspections at Time of Property Transfer

Moved by Mr. Macdonald, seconded by Mr. Speers to open the Public Hearing on the Ordinance Amendment to be Considered for November 2014 General Referendum: Require Septic System Inspections at Time of Property Transfer. Without objection, so ordered.

Public Comment: Lew Stowe
Helen Rollins
Greg Gosselin
Lori Barrett
Arthur Krycos
Bill Conda
Sherry Dabiere
Helen Rollins
Greg Gosselin
Lori Barrett

Moved by Mr. Macdonald, seconded by Mr. Speers to close the Public Hearing on the Ordinance Amendment to be Considered for November 2014 General Referendum: Require Septic System Inspections at Time of Property Transfer. Without objection, so ordered.

4. November 2014 General Referendum

Moved by Mr. Macdonald, seconded by Mr. Speers to open the Public Hearing on the November 2014 General Referendum. Without objection, so ordered.

Public Comment: None

Moved by Mr. Palmer, seconded by Mr. Speers to close the Public Hearing on the November 2014 General Referendum. Without objection, so ordered.

5. November 2014 Special General Referendum

Moved by Mr. Speers, seconded by Mr. Palmer to open the Public Hearing on the November 2014 Special General Referendum. Without objection, so ordered.

Public Comment: None

Moved by Mr. Speers, seconded by Mr. Palmer to close the Public Hearing on the November 2014 Special General Referendum. Without objection, so ordered.

I. Endorsements

Business Licenses:

1. Kevin Evans DBA: Thai For You for Food Service and Liquor; located at 647 US Route One

Moved by Mr. Macdonald, seconded by Mr. Speers to approve the following Business License: Kevin Evens DBA: Thai For You for Food Service and Liquor; located at 647 US Route One subject to taxes, fees and inspections being current and compliant with the usual noise stipulations. Vote 5-0, motion passes.

J. Old Business

K. New Business

1. Discussion and Possible Action Regarding a Petition Submitted for Enactment of an Ordinance Allowing Use of Marijuana by Persons 21 Years of Age or Older in the Town of York

Town Clerk Mary-Anne Szeniawski verified 767 signatures on the petition submitted for Enactment of an Ordinance Allowing Use of Marijuana by Persons 21 Years of Age or Older in the Town of York.

Moved by Mr. Nowell, seconded by Mr. Macdonald to place the proposed Ordinance Allowing Use of Marijuana by Persons 21 Years of Age or Older in the Town of York on the November General Referendum. Vote 2-3, Mr. Speers, Mr. Palmer and Ms. Andrews against, motion fails.

Chairman Andrews took New Business Item #6 out of order.

2. "6. Discussion and Possible Action Regarding Purchase of a Plow Truck"

Director of Public Works Dean Lessard recommended that Liberty International Trucks be awarded the bid for the FY2015 Public Works Plow Truck Chassis.

The Board chose to move this item to their next regular meeting for ....

Chairman Andrews took New Business Item #9 out of order.

3. "9. Acceptance of Criminal Forfeiture from Docket No: 14-1063

Moved by Mr. Palmer, seconded by Mr. Speers to approve the signing of the Asset Forfeiture documented in the State of Maine Superior Court Criminal Action Docket No: 14-1063 and as required by Title MRSA Subsection 5824(3) and 5826(6). Vote 5-0, motion passes.

4. "2. Discussion and Possible Action Regarding a Proposed Ordinance Amendment to Require Septic System Inspections at Time of Property Transfer"

Moved by Mr. Speers, seconded by Mr. Nowell to place the proposed Ordinance Amendment to Require Septic System Inspections at Time of Property Transfer on the ballot of the November General Referendum. Vote 3-2, Mr. Palmer and Ms. Andrews against, motion passes.

5. "3. Discussion and Possible Action on Draft Warrant for November 2014 General Referendum"

Moved by Mr. Palmer, seconded by Mr. Speers to approve the warrant for the November General Referendum excluding Article 8. Vote 3-2, Mr. Nowell and Mr. Macdonald against, motion passes.

6. "4. Discussion and Possible Action on Draft Warrant for November 2014 Special General Referendum"

Moved by Mr. Palmer, seconded by Mr. Macdonald to approve the Warrant for the November Special General Referendum. Vote 5-0, motion passes.

7. "5. Preference Votes on All November General Referendum Warrant Articles"

Preference Votes:
1. 5-0
2. 5-0

3. 3-2; Ms. Andrews and Mr. Palmer against.
4. 5-0
5. 5-0
6. 5-0
7. 5-0
~~8. 0-0~~
9. 5-0

8. "7. Discussion Regarding the Board of Selectmen's Meeting Schedule Through the End of 2014"

The Board of Selectmen confirmed the following dates for their regularly scheduled meetings for the rest of 2014, as to work around the upcoming Holidays: September 8, 22 and 25; October 6 and 27; November 10 and 17; December 8 and 15.

9. "8. Discussion of the FY16 Budget"

Interim Town Manager, Stephen H. Burns asked the Board of Selectmen to use the next two weeks to think about what they would like to see, at a broad policy level, in the FY16 budgets coming from Departments and Boards.

10. Discussion and Possible Action Regarding Surveying, Deed Research, Construction/Drainage Easements, and Preparation of an Agreement With the York Sewer District Relating to Possible Acquisition of Property on the North Side of Bay Haven Road

The Board of Selectmen had a joint meeting with the York Sewer District Board of Trustees to discuss the possibility of transfer of two parcels of land on the ocean side of Bay Haven Road.

Moved by Mr. Macdonald, seconded by Mr. Nowell to direct staff to put out a Request for Proposals for a Maine-Licensed Professional Surveyor to locate and monument the properties being offered by the York Sewer District to the Town. Vote 5-0, motion passes.

Moved by Mr. Macdonald, seconded by Mr. Nowell to direct the Interim Town Manager to work with the York Sewer District Superintendent to draft specific questions about liability and a possible agreement that would address shared responsibility for additional stormwater drainage that would cross the York Sewer District property. Vote 5-0, motion passes.

The Board directed the Interim Town Manager to send all the documentation to the Town attorney and ask if she believes that it is justifies a title search.

11. Special Event: 1st Annual Walker John Family Foundation Garden Party and Art Auction

Moved by Mr. Macdonald, seconded by Mr. Nowell to approve the Special Event Permit Application for the Walker John Family foundation's Annual Garden Party and Art Auction on Saturday, September 27, 2014 with the attached conditions given by Department Heads. Vote 5-0, motion passes.

12. Special Event: 5th Annual Ride for Help and Hope

Moved by Mr. Macdonald, seconded by Mr. Nowell to approve the Special Event Permit Application for the My Breast Cancer Support's Annual Ride for Help and Hope on Saturday, October 4, 2014 with the attached conditions given by Department Heads. Vote 5-0, motion passes.

13. Special Event: Long Sands Beach: Run, Walk and Kids Fun Run

Moved by Mr. Macdonald, seconded by Mr. Nowell to approve the Special Event Permit Application for the Agamenticus Ski Club's Long Sands Beach – Run, Walk and Kids Fun Run on Saturday, October 25, 2014 with the attached conditions given by Department Heads. Vote 5-0, motion passes.

14. Special Event: Tri-State Seacoast Century

Moved by Mr. Macdonald, seconded by Mr. Nowell to approve the Special Event Permit Application for the Granite State Wheelmen's Tri-State Seacoast Century on Saturday and Sunday, September 20 and 21, 2014 with the attached conditions given by Department Heads. Vote 5-0, motion passes.

L. Other Business

Mr. Palmer stated that the School Committee is putting together an Ad-Hoc Committee to help go over the proposals they received regarding a new addition to one of the schools and that if no one else volunteered, he would accept being the Board of Selectmen representative on that Committee.

Mr. Nowell stated that he doesn't think the Sewer District and residents on Route 91 received any notification of the Road Construction taking place.

Ms. Andrews stated that she will be bringing information to the Board in a future Work Session a bill that the U.S. Government is looking at regarding "Wild and Scenic York River".

M. Citizens' Forum

Public Comment: None

Adjourn

Moved by Mr. Macdonald, seconded by Mr. Speers to adjourn the meeting at 9:58PM. Without objection, so ordered.

DRAFT

BOARD OF SELECTMEN'S
MEETING MINUTES
4:00PM WEDNESDAY, SEPTEMBER 15, 2014
YORK PUBLIC LIBRARY

Present: Chairman Mary Andrews, Vice-Chairman Robert E. Palmer Jr., Jonathan O. Speers, Torbert Macdonald, Ronald Nowell, Director of Human Resources Liam Gallagher, and Citizens' Committee Members: Paul Salacain, James Smith, Linda Scotland and Kathleen Kluger.

Call to Order

Chairman Mary Andrews called the meeting to order at 4:05PM.

A. Executive Session

1. Town Manager Search Discussion; Pursuant to MRSA Title 1, Section 405 (6)(A)

Moved by Mr. Speers, seconded by Mr. Palmer to enter into Executive Session. Without objection, so ordered.

Moved by Mr. Nowell, seconded by Mr. Macdonald to exit out of Executive Session. Without objection, so ordered.

Adjourn

Chairman May Andrews adjourned the meeting at 4:53PM.

Back to Agenda

AGENDA ITEM NUMBER: ____

REQUEST FOR ACTION BY BOARD OF SELECTMEN

Date Submitted: September 17, 2014	Type of Action:
Date Action Requested: September 22, 2014	☐ Procedural ☒ Formal Action
Regular _X_ Work Session ____	☐ Other: _____

Subject: Acceptance of the bid for 2014 Ford F-150 4 WD Super Crew 145" XL W1E 4 X 4 Pickup Truck.

TO: BOARD OF SELECTMEN

FROM: Chief Douglas P. Bracy

RECOMMENDATION: For the BOS to approve the bid from 2014 Ford F-150 4 WD Super Crew Cab Pickup Truck from Quirk Ford of Augusta, ME.

PROPOSED MOTION I moved to award the bid for the purchase of a 2014 Ford F-150 Super Crew Cab Pickup Truck to Quirk Ford of Augusta in the amount of $ 21, 733.00 from the capital cruiser account of the Police Department.

Discussion:

FISCAL IMPACT: $23,733.00

DEPARTMENT LINE ITEM ACCOUNT: Capital cruiser account

BALANCE IN LINE ITEM IF APPROVED: $54,983.00

Prepared By: Chief Douglas P Bracy _____

Reviewed By: Town Manager Stephen H. Burns _____

Back to Agenda

TOWN OF YORK, MAINE
Police Department

Douglas P. Bracy
Chief of Police

Mailing Address:
36 Main Street
York, Maine 03909

Dispatch:
Non-Emergency
(207) 363-4444

Administration:
(207) 363-1031

Facsimile:
(207) 361-6818

www.yorkpolice.org

Committed to excellence

Memorandum

Date: **September 17, 2013**

To: **Board of Selectmen**

Cc: **Town Manager Stephen H. Burns**

From: **Chief Douglas P Bracy** DPB

RE: **ACO Truck Bid Acceptance**

The Police Department is replacing its 2004 Chevy Silverado pickup truck that our Animal Control Officers use in the course of their duties to patrol and pickup stray animals. The current vehicle has 130,492 miles on it and is at the point of starting to cost us a lot of money in maintenance due to its age and condition (rust). The vehicle we are looking to purchase is a 4 wheel drive SuperCrew cab style pickup truck which affords our officers to keep much of the equipment they need to perform their job in the vehicle. It will also serve a secondary purpose of being able to tow any of our four emergency services trailers or signboards as it also comes with a tow package.

A bid request for the one (1) Ford F-150 4WD SuperCrew 145 XL Pickup Truck was sent out several weeks ago to five Ford dealerships in our area. Three bids were received by the September 16th deadline and were opened in the Town Manager's Office at 3:00 PM.

Quirk Ford of Augusta Maine submitted a total bid price of $21,733. This price reflected a base price of $39,455 minus incentives and trade-in value for our 2004 Chevrolet Silverado. The bid did not break out the incentive or tradein values.

Yankee Ford of South Portland Maine submitted a total bid price of $23,125.00. This price reflected a base unit price of $36,125 for the new vehicle minus the trade-in value of $5,000.00 for the 2004 Chevrolet Silverado.

Starkey Ford of York Maine submitted a total bid price of $23,791.00. This price reflected a base unit price of $28,866 for the new vehicle minus the trade-in value of $5,075.00 for the 2004 Chevrolet Silverado.

This process reflected a difference of $2,058 between the bids of Starkey Ford and Quirk Ford and a difference of $1,392.00 between the bids of Yankee Ford and Quirk Ford. In light of these differences and the fact we can take immediate delivery of this vehicle upon the award, it is my recommendation that the Board of Selectmen award the bid to Quirk Ford of Augusta for the purchase of this 2014 Ford F-150 SuperCrew 4 x4 pickup truck.

Back to Agenda

TOWN OF YORK, MAINE
Police Department

Douglas P. Bracy
Chief of Police

Mailing Address:
36 Main Street
York, Maine 03909

Dispatch:
Non-Emergency
(207) 363-4444

Administration:
(207) 363-1031

Facsimile:
(207) 361-6818

www.yorkpolice.org

Committed to excellence

PURCHASE OF ONE NEW 2014 FORD F-150 PICKUP

The Town of York is now accepting bids for one (1) New 2014 Ford F-150 SuperCrew 145" XL W1E 4 X 4 Pickup. Bids should be forwarded to the office of the Town Manager, 186 York Street, York, Maine 03909 not later than 12:00 P.M., Wednesday, September 16, 2014, and mark outside the envelope "Bid for F-150 Special Service Police Vehicle."

Bids will be opened at the Town Managers office on Wednesday, September 16, 2014 at 3:00 P.M., and awarded on Monday, September 22, 2014, at the Selectmen's Meeting. The Board of Selectmen reserves the right to accept or reject any or all bids.

SPECIFICATIONS:

Type and model:	New 2014 Ford F-150 4 WD SuperCrew 145" XL (W1E).
Exterior color:	Sterling Gray Metallic (UJ)
Interior color:	Keyed to exterior color
Engine assembly:	8 cyl. 5.0L FFV
Wheelbase:	Standard
Rear Axle:	3.55 Axle Ratio
Transmission:	Electronic 6 Speed Automatic

Back to Agenda

Equipment Required:

Engine: 5.0L V8 FFV (99F)
Transmission: Electronic 6 Speed Automatic (446)
Equipment Group 100A Base (100A)
3.55 Axle Ratio (X19)
Wheels: 17" Gray Styled Steel (64C)
Tires: P265/70R17 OWL A/T (4) (T7H)
Paint: Sterling Gray Metallic (UJ)
Interior: Steel Gray; Cloth Bucket Seats (US)
XL Package (61X)
Communications Package (66C)
California Emission System (422)
Trailer Tow Package (535)
Radio: AM/FM Stereo/Single CD player with Clock (58B)
Cruise Control (50S)

Delivery: Within thirty (30) days of bid award. Vehicle to be delivered to the York Police Department. Final acceptance and approval by the Chief of Police on satisfaction that all specifications are met.

Trade In: 2004 Chevrolet half ton 4X4 EXT. Cab with 130,275 miles, vehicle can be viewed at the York Police Department by appointment.

Back to Agenda

POLICE CRUISER BID PROPOSAL DEALERSHIP

Starkey Ford, Inc.
ATTN: Mr. Robert Berry
P.O. Box 37, 422 Route 1
York, ME 03909

Phone: 363-2483
FAX: 363-3547

Quirk Ford
ATTN: Mr. Leo Chicoin
P.O. Box 1055, Lower State Road
Augusta, ME 04332-0859

FAX: 207-622-9528

Arundel Ford
Attn: Mr. Rod Brackett
P.O. Box 560B
Arundel, ME 04046

Phone
800-889-7171
FAX: 985-7173

Casco Bay Ford
ATTN: Mr. Joe Cook
1213 US RT 1.
Yarmouth, ME 04096

Phone: 800-295-1505
207-846-5577
Fax: 207-846-5064

Yankee Ford
Attn: Mr. Scott Bonney
165 Waterman Drive
South Portland, ME 04106

scott@yankeeford.com

Phone: 207-799-5591
Fax: 207-799-9412

Back to Agenda

Prepared For:
SUPER CREW 4 WD
TOWN OF YORK
186 YORK STREET
YORK, ME 03909

Prepared By:
LEO CHICOINE
QUIRK FORD OF AUGUSTA
7 WATER STREET
HALLOWELL, ME 04370
Phone: (207) 430-1621
Fax: (207) 991-5539
Email: lchicoine@quirkauto.com

2014 Ford F-150

W1E 4WD SuperCrew 145" XL

Photo may not represent exact vehicle or selected equipment.

Back to Agenda

Prepared For:
SUPER CREW 4 WD
TOWN OF YORK
186 YORK STREET
YORK, ME 03909

Prepared By:
LEO CHICOINE
QUIRK FORD OF AUGUSTA
7 WATER STREET
HALLOWELL, ME 04370
Phone: (207) 430-1621
Fax: (207) 991-5539
Email: lchicoine@quirkauto.com

2014 Fleet/Non-Retail Ford F-150 4WD SuperCrew 145" XL W1E

WINDOW STICKER

2014 Ford F-150 4WD SuperCrew 145" XL	Interior: - No color has been selected.
5.0 L/302 CID Regular Unleaded V-8	Exterior 1: - No color has been selected.
* 6-Speed Automatic w/OD	Exterior 2: - No color has been selected.

CODE	MODEL	MSRP
W1E	2014 Ford F-150 4WD SuperCrew 145" XL	$37,015.00
	OPTIONS	
99F	ENGINE: 5.0L V8 FFV	$0.00
446	TRANSMISSION: ELECTRONIC 6-SPEED AUTOMATIC	$0.00
100A	EQUIPMENT GROUP 100A BASE	$0.00
X19	3.55 AXLE RATIO	$0.00
64C	WHEELS: 17" GRAY STYLED STEEL	$0.00
T7H	TIRES: P265/70R17 OWL A/T (4)	$0.00
UJ	STERLING GRAY METALLIC	$0.00
___	STANDARD PAINT	$0.00
US	STEEL GRAY, CLOTH BUCKET SEATS	$0.00
61X	XL PLUS PACKAGE	$450.00
66C	COMMUNICATIONS PACKAGE	$420.00
422	CALIFORNIA EMISSIONS SYSTEM	$0.00
535	TRAILER TOW PACKAGE	$375.00
153	FRONT LICENSE PLATE BRACKET	$0.00
58B	RADIO: AM/FM STEREO/SINGLE-CD PLAYER W/CLOCK	INC
50S	CRUISE CONTROL	INC
	SUBTOTAL	**$38,260.00**

Report content is based on current data version referenced. Any performance-related calculations are offered solely as guidelines. Actual unit performance will depend on your operating conditions.

GM AutoBook, Data Version: 350.0, Data updated 9/2/2014
© Copyright 1986-2012 Chrome Data Solutions, LP. All rights reserved.
Customer File:

Back to Agenda

Prepared For:
SUPER CREW 4 WD
TOWN OF YORK
136 YORK STREET
YORK, ME 03909

Prepared By:
LEO CHICOINE
QUIRK FORD OF AUGUSTA
7 WATER STREET
HALLOWELL, ME 04370
Phone: (207) 430-1621
Fax: (207) 991-5539
Email: lchicoine@quirkauto.com

2014 Fleet/Non-Retail Ford F-150 4WD SuperCrew 145" XL W1E

WINDOW STICKER

Advert/Adjustments	$0.00
Destination Charge	$1,195.00
TOTAL PRICE	**$39,455.00**

Est City: 14.00 mpg
Est Highway: 19.00 mpg
Est Highway Cruising Range: 684.00 mi

Trade In. 2004 Chevrolet 4x4 Sgt Cab.

Net Trade Difference
With Trade $.21,733.00

Leo Chicoine
Fleet Sales Mgr
430-1621

Report content is based on current data version referenced. Any performance-related calculations are offered solely as guidelines. Actual unit performance will depend on your operating conditions.

GM AutoBook, Data Version: 350.0, Data updated 9/2/2014
© Copyright 1986-2012 Chrome Data Solutions, LP. All rights reserved.
Customer File:

Prepared For:
SUPER CREW 4 WD
TOWN OF YORK
186 YORK STREET
YORK, ME 03909

Prepared By:
LEO CHICOINE
QUIRK FORD OF AUGUSTA
7 WATER STREET
HALLOWELL, ME 04370
Phone: (207) 430-1621
Fax: (207) 991-5539
Email: lchicoine@quirkauto.com

2014 Fleet/Non-Retail Ford F-150 4WD SuperCrew 145" XL W1E

SELECTED MODEL & OPTIONS

SELECTED MODEL - 2014 Fleet/Non-Retail W1E 4WD SuperCrew 145" XL

Code	Description	MSRP
W1E	2014 Ford F-150 4WD SuperCrew 145" XL	$37,015.00

SELECTED VEHICLE COLORS - 2014 Fleet/Non-Retail W1E 4WD SuperCrew 145" XL

Code	Description
-	Interior: No color has been selected.
-	Exterior 1: No color has been selected.
-	Exterior 2: No color has been selected.

SELECTED OPTIONS - 2014 Fleet/Non-Retail W1E 4WD SuperCrew 145" XL

CATEGORY	Code	Description	MSRP
ENGINE			
	99F	ENGINE: 5.0L V8 FFV (STD)	$0.00
TRANSMISSION			
	446	TRANSMISSION: ELECTRONIC 6-SPEED AUTOMATIC -inc: tow/haul mode (STD)	$0.00
OPTION PACKAGE			
	100A	EQUIPMENT GROUP 100A BASE	$0.00
AXLE RATIO			
	X19	3.55 AXLE RATIO (STD)	$0.00
WHEELS			
	64C	WHEELS: 17" GRAY STYLED STEEL (STD)	$0.00
TIRES			
	T7H	TIRES: P265/70R17 OWL A/T (4) -inc: OWL A/T spare tire (STD)	$0.00
PRIMARY PAINT			
	UJ	STERLING GRAY METALLIC	$0.00

Report content is based on current data version referenced. Any performance-related calculations are offered solely as guidelines. Actual unit performance will depend on your operating conditions.

GM AutoBook, Data Version: 350.0, Data updated 9/2/2014
© Copyright 1986-2012 Chrome Data Solutions, LP. All rights reserved.
Customer File:

Back to Agenda

Prepared For:
SUPER CREW 4 WD
TOWN OF YORK
186 YORK STREET
YORK, ME 03909

Prepared By:
LEO CHICOINE
QUIRK FORD OF AUGUSTA
7 WATER STREET
HALLOWELL, ME 04370
Phone: (207) 430-1621
Fax: (207) 991-5539
Email: lchicoine@quirkauto.com

2014 Fleet/Non-Retail Ford F-150 4WD SuperCrew 145" XL W1E

SELECTED MODEL & OPTIONS

SELECTED OPTIONS - 2014 Fleet/Non-Retail W1E 4WD SuperCrew 145" XL

CATEGORY	Code	Description	MSRP
PAINT SCHEME			
	___	STANDARD PAINT	$0.00
SEAT TYPE			
	US	STEEL GRAY, CLOTH BUCKET SEATS w/o 66S-inc: manual driver lumbar, Center Console w/66S-inc: Center-seat section deleted, Restraint control module cover is provided, vinyl rear bench seat	$0.00
ADDITIONAL EQUIPMENT			
	61X	XL PLUS PACKAGE -inc: Radio: AM/FM Stereo/Single-CD Player w/Clock, auxiliary audio input jack, speed-compensated volume control and customer information display, MyKey Owner controls feature, Cruise Control *GROSS* (With the selection of 100A and 86D, requires XL Plus Package savings)	$450.00
	66C	COMMUNICATIONS PACKAGE -inc: Additional Steering Wheel Audio Controls, SYNC Voice Activated Communication & Entertainment, 911 assist and vehicle health reports, SYNC Applink provides control of certain smartphone applications using SYNC voice commands, Connect to apps like Pandora and more w/your iPhone, Blackberry or Android platform mobile phone (With the selection of 100A, requires 61X)	$420.00
	422	CALIFORNIA EMISSIONS SYSTEM -inc: Required code for California Emissions States registration, except in conditions where 50-State Emissions System is standard equipment, Optional code for Cross Border State dealers, Cross Border States are Arizona, District of Columbia, Idaho, New Hampshire, Nevada, Ohio, Virginia and West Virginia	$0.00
	535	TRAILER TOW PACKAGE -inc: 7-pin wiring harness and class IV trailer hitch receiver, Auxiliary Transmission Oil Cooler, SelectShift Transmission, Upgraded Radiator REQUIRED for towing over 5,000 lbs.	$375.00
	153	FRONT LICENSE PLATE BRACKET -inc: Standard in states requiring 2 license plates, optional to all others DELETES standard lower front grille on 5.0L engines.	$0.00

Report content is based on current data version referenced. Any performance-related calculations are offered solely as guidelines. Actual unit performance will depend on your operating conditions.

GM AutoBook, Data Version: 350.0, Data updated 9/2/2014
© Copyright 1986-2012 Chrome Data Solutions, LP. All rights reserved.
Customer File:

Back to Agenda

Prepared For:
SUPER CREW 4 WD
TOWN OF YORK
186 YORK STREET
YORK, ME 03909

Prepared By:
LEO CHICOINE
QUIRK FORD OF AUGUSTA
7 WATER STREET
HALLOWELL, ME 04370
Phone: (207) 430-1621
Fax: (207) 991-5539
Email: lchicoine@quirkauto.com

2014 Fleet/Non-Retail Ford F-150 4WD SuperCrew 145" XL W1E

SELECTED MODEL & OPTIONS

SELECTED OPTIONS - 2014 Fleet/Non-Retail W1E 4WD SuperCrew 145" XL

CATEGORY			
	Code	**Description**	**MSRP**
ADDITIONAL EQUIPMENT			
	58B	RADIO: AM/FM STEREO/SINGLE-CD PLAYER W/CLOCK -inc: auxiliary audio input jack, speed-compensated volume control and customer information display	INC
	50S	CRUISE CONTROL	INC
OPTIONS TOTAL			**$1,245.00**

Report content is based on current data version referenced. Any performance-related calculations are offered solely as guidelines. Actual unit performance will depend on your operating conditions.

GM AutoBook, Data Version: 350.0, Data updated 9/2/2014
© Copyright 1986-2012 Chrome Data Solutions, LP. All rights reserved.
Customer File:

Back to Agenda

TOWN OF YORK, MAINE
Police Department

Douglas P. Bracy
Chief of Police

Mailing Address:
36 Main Street
York, Maine 03909

Dispatch:
Non-Emergency
(207) 363-4444

Administration:
(207) 363-1031

Facsimile:
(207) 361-6818

www.yorkpolice.org

Committed to excellence

FAX COVER SHEET

DATE: **09/08/14** TIME: _____

TO: **Yankee Ford** PHONE: **799-5591**

Attn: Scott Bonney FAX: **799-9412**

FROM: **Lt. C. Szeniawski** PHONE: **363-1031**

_____ FAX: **361-6818**

REMARKS: **Bid for purchase One New ~~2014~~ 2015 Ford F-150 Supercrew 145" XL W1E 4X4 Pickup**

Number of pages including cover sheet: **3**

Confidentiality Notice

This facsimile transmission and accompanying documents(s) may contain confidential information belonging to the sender, which is protected. The information is intended only for the use of the individual or entity named above. If you are not the intended recipient, you are hereby notified that any disclosure, copying, distribution or the taking of any action in reliance on the contents of this information is strictly prohibited. If you have received this transmission in error, please immediately notify us by telephone to arrange for the return of the documents.

Back to Agenda

TOWN OF YORK, MAINE
Police Department

Douglas P. Bracy
Chief of Police

Mailing Address:
36 Main Street
York, Maine 03909

Dispatch:
Non-Emergency
(207) 363-4444

Administration:
(207) 363-1031

Facsimile:
(207) 361-6818

www.yorkpolice.org

Committed to excellence

PURCHASE OF ONE NEW 2014 FORD F-150 PICKUP

The Town of York is now accepting bids for one (1) New 2014 Ford F-150 SuperCrew 145" XL W1E 4 X 4 Pickup. Bids should be forwarded to the office of the Town Manager, 186 York Street, York, Maine 03909 not later than 12:00 P.M., Wednesday, September 16, 2014, and mark outside the envelope "Bid for F-150 Special Service Police Vehicle."

Bids will be opened at the Town Managers office on Wednesday, September 16, 2014 at 3:00 P.M., and awarded on Monday, September 22, 2014, at the Selectmen's Meeting. The Board of Selectmen reserves the right to accept or reject any or all bids.

* 2014 MY BREAKED OUT FOR FLEET UNITS

SPECIFICATIONS:

Type and model:	New ~~2014~~ 2015 Ford F-150 4 WD SuperCrew 145" XL (W1E).
Exterior color:	Sterling Gray Metallic (~~UJ~~) J7 MAGNETIC
Interior color:	Keyed to exterior color W6 GREY CLOTH BUCKETS
Engine assembly:	8 cyl. 5.0L FFV 99F
Wheelbase:	Standard 145" WB
Rear Axle:	3.55 Axle Ratio XL9
Transmission:	Electronic 6 Speed Automatic 446

Back to Agenda

CNGP530 VEHICLE ORDER CONFIRMATION 09/11/14 17:39:46
==> Dealer: F11209
2014 F-150 Page: 1 of 2

Order No: 0001 Priority: M2 Ord FIN: QK866 Order Type: 5B Price Level: 430
Ord PEP: 100A Cust/Flt Name: YORK PD. PO Number:

		RETAIL	DLR INV			RETAIL	DLR INV
W1E	F150 4X4 CREW	$37015	$34331.00	61X	XL PLUS PACKAGE	$450	$385.00
	145" WHEELBASE			508	CRUISE CONTROL	NC	NC
UJ	STERLING GRAY				MY KEY		
U	CLTH BUCKT SEAT	NC	NC		FRT LICENSE BKT	NC	NC
S	STEEL GRAY INT			422	CALIF EMISSIONS	NC	NC
100A	EQUIP GRP				SYNC SYSTEM		
	.XL SERIES			535	TRAILER TOW PKG	375	320.00
	.17" GREY STEEL						
99F	5.0L V8 FFV ENG				TOTAL BASE AND OPTIONS	39455	36125.68
446	ELEC 6-SPD AUTO	NC	NC		TOTAL	39455	36125.68
	.P265 OWL A/T				*THIS IS NOT AN INVOICE*		
X19	3.55 REG AXLE	NC	NC		*TOTAL PRICE EXCLUDES COMP PRICE ALLOW*		
	7350# GVWR						
	SLCT SHFT TRANS				* MORE ORDER INFO NEXT PAGE *		
	36 GAL TANK						

F8=Next

CNGP530 VEHICLE ORDER CONFIRMATION 09/11/14 17:40:20
==> Dealer: F11209
2014 F-150 Page: 2 of 2

Order No: 0001 Priority: M2 Ord FIN: QK866 Order Type: 5B Price Level: 430
Ord PEP: 100A Cust/Flt Name: YORK PD. PO Number:

		RETAIL	DLR INV
	CD PANEL		
	CD W/ SYNC BASE		
66C	COMMUNICAT PKG	420	358.00
794	PRICE CONCESSN		
	REMARKS TRAILER		
	SP FLT ACCT CR		(478.00)
	FUEL CHARGE		14.68
	DEST AND DELIV	1195	1195.00

	RETAIL	DLR INV
TOTAL BASE AND OPTIONS	39455	36125.68
TOTAL	39455	36125.68

THIS IS NOT AN INVOICE
TOTAL PRICE EXCLUDES COMP PRICE ALLOW

2014 M.Y.

800
1100
19600

36,125 DLR COST.
(8000)
BID: $28125
(5000) TRADE
BID: $23,125
LESS TRADE

F1=Help F2=Return to Order F7=Prev F3/F12=Veh Ord Menu
F4=Submit F5=Add to Library F9=View Trailers

Back to Agenda

s-bonney@SCOTT-PC

Sep 11, 2014 5:12:33 PM

BOARD OF SELECTMEN,

2014 AND 2015 MODEL YEAR F-150 BIDS ARE IN THIS PACKAGE. THE FACTORY IS TELLING US THAT 2014'S ARE CLOSE TO OR BALANCED OUT FOR THE YEAR.

COULD NOT CONFIRM!!

IF 2014'S ARE NOT AVAILABLE GO WITH 2015' MY BID AS ALTERNATE.

SINCERLY,

Scott Bonney
FLEET MANAGER
YANKEE FORD SALES.

Back to Agenda

CNGP530 VEHICLE ORDER CONFIRMATION 09 11 14 17:12:19

==> _____ _____ Dealer: F11209

2015 F-150 Page: 1 of 2

Order No: 0001 Priority: M2 Ord FIN: QK866 Order Type: 5B Price Level: 520

Ord PEP: 100A Cust Flt Name: YORK PD. PO Number:

		RETAIL	DLR INV
W1E ✓	F150 4X4 CREW	$35445	$32874.00
	145" WHEELBASE		
J7 ✓	MAGNETIC		
W ✓	CLTH BUCKT SEAT	125	107.00
G	GRAY INTERIOR		
100A ✓	EQUIP GRP		
	.XL SERIES		
	.SELECTSHIFT		
	.17"SILVER STEEL		
99F ✓	5.0L V8 FFV ENG	1595	1360.00
446 ✓	ELEC 6-SPD AUTO		
T7C ✓	LT245/70R17E	NC	NC
XL9 ✓	3.55 ELEC LOCK	470	401.00
	7000# GVWR		
	FRT LICENSE BKT	NC	NC

		RETAIL	DLR INV
422 ✓	CALIF EMISSIONS	NC	NC
50S ✓	CRUISE CONTROL	225	192.00
52B ✓	SYNC	420	358.00
53A ✓	TRAILER TOW PKG	495	422.00
58B ✓	AM/FM CD	290	248.00
	23 GAL TANK		

TOTAL BASE AND OPTIONS	41430	37671.68
XL BASE DISCT PEG & TT	(500)	(426.00)
TOTAL	40930	37245.68

THIS IS NOT AN INVOICE

TOTAL PRICE EXCLUDES COMP PRICE ALLOW

* MORE ORDER INFO NEXT PAGE *

F8=Next

CNGP530 VEHICLE ORDER CONFIRMATION 09/11/14 17:12:31

==> _____ _____ Dealer: F11209

2015 F-150 Page: 2 of 2

Order No: 0001 Priority: M2 Ord FIN: QK866 Order Type: 5B Price Level: 520

Ord PEP: 100A Cust/Flt Name: YORK PD. PO Number:

2015 mil.

		RETAIL	DLR INV
794 ✓	PRICE CONCESSN		
	REMARKS TRAILER		
85A ✓	POWER EQUIP GRP	1170	998.00
	SP FLT ACCT CR		(498.00)
	FUEL CHARGE		14.68
	DEST AND DELIV	1195	1195.00

TOTAL BASE AND OPTIONS	41430	37671.68
XL BASE DISCT PEG & TT	(500)	(426.00)
TOTAL	40930	37245.68

THIS IS NOT AN INVOICE

TOTAL PRICE EXCLUDES COMP PRICE ALLOW

6000
1200
7200

$37245 DLR COST
-<5800> GPC & HB

BID: $31,445

LESS TRADE <-5000.00>

BID: (LESS TRADE) $26,445

F7=Prev

F1=Help F2=Return to Order F3/F12=Veh Ord Menu

F4=Submit F5=Add to Library F9=View Trailers

Back to Agenda

2015 my CODES

Equipment Required:

99F Engine: 5.0L V8 FFV (99F)
446 Transmission: Electronic 6 Speed Automatic (446)
100A Equipment Group 100A Base (100A)
XL9 ~~X19~~ 3.55 Axle Ratio (~~X19~~)
64C Wheels: 17" Gray Styled Steel (64C)
T7C Tires: P265/70R17 OWL A/T (4) (~~T7H~~) N/A 15' my (245/70/17 BSW T7 2015 my)
J7 ~~UJ~~ Paint: Sterling Gray Metallic (~~UJ~~) J7
WG ~~US~~ Interior: Steel Gray; Cloth Bucket Seats (~~US~~) WG
85A XL Package (~~61X~~) PWR EQUIP GROUP
52B Communications Package (~~66C~~) SYNC 52B 15' my
422 California Emission System (422)
53A Trailer Tow Package (~~535~~) 53A 15' my
58B Radio: AM/FM Stereo/Single CD player with Clock (58B) ✓
50S Cruise Control (50S) ✓

Delivery: * Within thirty (30) days of bid award. Vehicle to be delivered to the York Police Department. Final acceptance and approval by the Chief of Police on satisfaction that all specifications are met.

Trade In: 2004 Chevrolet half ton 4X4 EXT. Cab with 130,275 miles, vehicle can be viewed at the York Police Department by appointment. $5000.00 ACV ESPO 9/10/14

* FACTORY ORDER BASIS ONLY
30-120 DAY APPROXIMATE LEAD TIME

Back to Agenda

Fleet Concession Management

FLEET CONCESSION MANAGEMENT : SEARCH

State/Fed: ME-MAINE

Model Year: 2014

2014 MY

Vehicle: 24--F-150

Body Type: W1E--F150 4X4 STYLESIDE

GPC TYPE: All

Search

BID AND ORDER MUST BE SUBMITTED BY EXPIRATION DATE

VEHICLE	BODY	GPC $	PRICE_LEVEL	REF DATE	REF#_FIN	GPC TYPE	EXPIRATION DATE
24-F-150	W1E-F150 4X4 STYLESIDE S/CREW	6300	415	7/29/2013	08110E	Local	N/A
24-F-150	W1E-F150 4X4 STYLESIDE S/CREW	8400	415	10/30/2013	17578E	Local	N/A
24-F-150	W1E-F150 4X4 STYLESIDE S/CREW	8500	420	4/7/2014	25275E	Piggyback	N/A

Back to Agenda

Welcome [illegible]!

Fleet Concession Management

HOME | CONCESSION TUTORIAL | CONCESSION LOOKUP TUTORIAL
CONCESSION LOOKUP | CONCESSION REQUEST ENTRY | CONCESSION REQUEST REVIEW/EDIT

FLEET CONCESSION MANAGEMENT : SEARCH

State/Fed: ME-MAINE

Model Year: 2015
Vehicle: 24--F-150
Body Type: W1E--F150 4X4 STYLESIDE
GPC TYPE: All

2015 m.y.

Search

BID AND ORDER MUST BE SUBMITTED BY EXPIRATION DATE

VEHICLE	BODY	GPC $	PRICE_LEVEL	REF DATE	REF#_FIN	GPC TYPE	EXPIRATION DATE
24-F-150	W1E-F150 4X4 STYLESIDE S/CREW	6000	515	7/28/2014	14413F	Local	N/A

2014' MODEL YEAR BALANCED OUT / N/A !!

Back to Agenda

STARKEY FORD, Inc.

422 Route 1
P.O. Box 37
York, Maine 03909-0037
www.starkeyford.com

Tel. 207.363.2483
Fax. 207.363.3547
E-mail. info@starkeyford.com

September 15, 2015
Town Manager, York, Maine
186 York Street
York, Me 03909

Dear Sir;

Starkey Ford, Inc. submits the following bid for one (1) Ford F-150 Supercrew 145",XL W1E 4X4 Pickup.

As quoted for the Town of York with one trade:

Price of 2014 Ford F-150	$28,866.00
Less trade 2004 Chevrolet	5,075.00
Net Price	$23,791.00

The truck quoted in the bid is a dealer locate and is subject to availability at the time of bid opening.

2014's can no longer be ordered.

Sincerely,

Robert Berry Jr.
Sales & Leasing Consultant

Enc: 2

Back to Agenda

Print window sticker

Disclaimer: This window sticker is only representative of the information contained on an actual window sticker, and may or may not match the actual window sticker on the vehicle itself. Please see your retailer for further information.

Vehicle Description

VIN 1FTFW1EF8EF **C57990**

F-150

2014 F150 4X4 SUPERCREW
5.0L V8 FFV ENGINE
ELEC 6-SPEED AUTO W/TOW MODE

Exterior
STERLING GRAY METALLIC
Interior
STEEL GRAY INTERIORCLOTH 40/20/40

Standard Equipment INCLUDED AT NO EXTRA CHARGE

EXTERIOR
. DOOR HANDLES - BLACK
. LOCKING REMOVABLE TAILGATE
. REAR SOLAR TINTED GLASS
. SPARE TIRE & WHEEL LOCK
. TOW HOOKS

INTERIOR
. 1TOUCH UP/DOWN DR/PASS WIN
. A/C W/MANUAL CLIMATE CONTROL, SINGLE ZONE
. BLACK VINYL FLOOR COVERING
. CRUISE CONTROL/TILT WHEEL
. DAY/NIGHT REARVIEW MIRROR

FUNCTIONAL
. 4-WHEEL DISC BRAKES W/ABS
. 12V AUXILIARY POWER POINT
. CARGO BOX TIE DOWN HOOKS
. EASYFUEL CAPLESS FILLER
. ELECT 4X4 SHIFT-ON-FLY
. FAIL-SAFE COOLING SYSTEM
. FULLY BOXED FRAME
. HILL START ASSIST
. INTERMITTENT SPEED WIPERS
. MAINT. FREE BATTERY
. OUTBOARD MNTD REAR SHOCKS
. PWR LOCKS, MIRRORS, WINDWS
. PWR RACK AND PINION STEER
. STABILIZER BAR, FRONT
. TRAILER SWAY CONTROL

SAFETY/SECURITY
. ADVANCETRAC WITH RSC
. AIRBAGS - FRONT SEAT MOUNTED SIDE IMPACT
. AIRBAGS - SAFETY CANOPY
. PERIMETER ALARM
. REAR HIGH MOUNT STOP LAMP
. SECURILOCK PASS ANTI THEFT
. SOS POST CRASH ALERT SYS
. TIRE PRESSURE MONITOR SYS

WARRANTY
. 3YR/36,000 BUMPER / BUMPER
. 5YR/60,000 POWERTRAIN
. 5YR/60,000 ROADSIDE ASSIST

Price Information

Included on this Vehicle

EQUIPMENT GROUP 101A	1,160
XL SERIES	
POWER EQUIPMENT GROUP	
XL PLUS PACKAGE	
CRUISE CONTROL	
MY KEY	
XL DECOR GROUP	
COMMUNICATION PACKAGE	
SYNC VOICE ACTIVATED SYSTEMS	
SELECT SHIFT TRANSMISSION	
STERLING GRAY METALLIC	
GRAY CLOTH 40/20/40	
.SINGLE CD W/ SYNC BASIC	
.17" GREY STYLED STEEL WHEELS	
5.0L V8 FFV ENGINE	
ELEC 6-SPEED AUTO W/TOW MODE	
.P265/70R17 OWL ALL-TERRAIN	
3.55 RATIO REGULAR AXLE	
7350# GVWR PACKAGE	
36 GALLON FUEL TANK	
FRONT LICENSE PLATE BRACKET	
CALIFORNIA EMISSIONS SYSTEM	
CLOTH 40/20/40	

Optional Equipment
2014 MODEL YEAR

BASE PRICE	**$37,015**
TOTAL VEHICLE & OPTIONS	38,175
DESTINATION & DELIVERY	1,195
TOTAL BEFORE DISCOUNTS	39,370
101A EQUIPMENT GROUP DISCOUNT	-750
TOTAL SAVINGS	**-750**
TOTAL MSRP	**$38,620**

Disclaimer: Option pricing will be blank for any item that is priced as 0 or "No Charge".

Fuel Economy Information

CITY MPG
14
HIGHWAY MPG
19

Estimated Annual Fuel Cost: $ 3,300

Vehicle Engine Information

Actual mileage will vary with options, driving conditions, driving habits and vehicle's condition. Results reported to EPA indicate that the majority of vehicles with these estimates will achieve between _ and _ mpg in the city and between _ and _ mpg on the highway.
For Comparison Shopping all vehicles classified as **Standard Pickup** have been issued mileage ratings from _ to _ mpg city and _ to _ mpg highway.

EXTENDED SERVICE PLAN

Ford Extended Service Plan is the ONLY service contract backed by Ford and honored by the Ford and Lincoln dealers. Ask your dealer for prices and additional details or see our website at www.Ford-ESP.com.

Back to Agenda

AGENDA ITEM NUMBER: ____

REQUEST FOR ACTION BY BOARD OF SELECTMEN

Date Submitted: September 17, 2014	Type of Action:
Date Action Requested: September 22, 2014	☐ Procedural ☒ Formal Action
Regular _X_ Work Session ____	☐ Other: _____

Subject: Award the bid for a replacement video system for the police department

TO: BOARD OF SELECTMEN

FROM: Chief Douglas P. Bracy

RECOMMENDATION: To approve the award of the bid for a new video recording system for the Police Department from Securadyne Systems in the amount of $39,897.00

PROPOSED MOTION: I move to approve the award of the bid for a new video recording system for the police department to Securadyne Systems in the amount of $39,897.00.

Discussion: It is my intent to ask the Board of Selectmen to approve the carry forward of FY 14 surplus in the police and communications budget to cover the costs of this replacement. To date there is $48,342.00 surplus.

FISCAL IMPACT: $39,897.00

DEPARTMENT LINE ITEM ACCOUNT:

BALANCE IN LINE ITEM IF APPROVED:

Prepared By: Chief Douglas P Bracy _____

Reviewed By: Town Manager Stephen H. Burns _____

Back to Agenda

TOWN OF YORK, MAINE
Police Department

Douglas P. Bracy
Chief of Police

Mailing Address:
36 Main Street
York, Maine 03909

Dispatch:
Non-Emergency
(207) 363-4444

Administration:
(207) 363-1031

Facsimile:
(207) 361-6818

www.yorkpolice.org

Committed to excellence

Memorandum To: Board of Selectmen

Subject: Replacement of Police Department's Audio / Video System

Date: September 17, 2014

From: Chief Douglas P. Bracy

The present audio video system for our Police Department has reached a point where it can no longer function adequately to provide the security and recordings that are required to safeguard our employees and meet legal requirements. Currently we are operating with a borrowed server from the company we had originally purchased our system from, as our main server suffered a catastrophic failure that couldn't be fixed at that time. This was nearly two years ago and although I had hoped to nurse this system along until we were in our new facility it is apparent by several recent incidents that we can longer wait. As I am sure both the Board of Selectmen and Budget Committee realize I have not asked for any capital appropriations, beside vehicles for many years, as we had attempted to incorporate these types of needs into the new Police facility when it was built. The years of delay are now catching up with us, as both this system and our emergency radio system are now obsolete and susceptible to failures such as we have experienced with the video system. In the case for the radio system we are now relegated to rely on our vendor to finds parts as Motorola no longer supports or makes parts for our current radio system.

Several factors ultimately brought me to request permission to replace our present video recording system. Nearly a month ago, a vehicle backed into one of my employee's personal vehicle in the front parking area of the Police Department causing several thousands of dollars' worth of damage. The operator of this vehicle left the scene without reporting the accident. The quality of the camera on the side of the building has depreciated so much over the years that the most we could get in viewing the video recording was the style of vehicle that had the accident, its color, and the fact it stuck the employee's vehicle hard enough to rock it back and forth. There was no doubt

Back to Agenda

the operator realized they had struck another vehicle and should have reported it. With a proper system we would have been able to read the license plate and locate the offender. As it was the operator was never found and the employee has had to shoulder the cost of the accident as it was an older vehicle. There have also been several incidents this summer where complaints were lodged by Citizens who came into our lobby to dispute parking tickets or other actions by department personnel. Because the camera in the lobby was not recording voice data we could only tell from the video there was an interaction in the lobby between the employee and complainant but couldn't prove or disprove the allegations. As I have found over the years with the in car videos, these recordings usually justify the actions of our employees and if not make a clear case to take action to correct any wrong doing.

Lastly, we are required by both State and Federal law to have a video recording with audio of interviews and interrogations when a juvenile is interviewed or in custody or when an adult is being interviewed in a cooperative investigation with any State or Federal Law Enforcement Agency. Our current system uses a VHS recording device which by today's standards is antiquated. In the last several years we are having difficulty buying these types of tapes and even more in playing them back at legal proceedings as many institutions have converted to DVD systems. The York County District Attorney's office is unable to accept VHS recordings as they no longer have the means to play them. This means we then have to transfer these recordings onto another format such as DVD. Another issue is with the quality of these recordings as they sometimes have additional background and static sounds embedded in the recordings making it difficult to hear people with softer voices. It is imperative with these types of interviews to provide the clearest and most accurate recording of what was said otherwise it can jeopardize investigations and not serve the purpose it was intended to by statute.

In bidding out this new system, I have built in additional capabilities with the hardware (server) to be able to accommodate the additional needs of a larger facility. My intentions are to purchase this equipment with the understanding that it must be able to be easily removed and taken to our new facility when the time comes in the future. That would include cameras, mounting equipment and any computers and or switches.

Lt. Robert Scamman drafted a RFP for the equipment necessary to replace the current system including installation and sent a correspondence with the bid package to five vendors in our area. (See attached bid). The bids were required to be in the Town Manager's Office by 3 p.m. on September 16th, 2014 when the bids were opened. Although several companies indicated an interest in bidding initially only one provided a written bid by that date.

Back to Agenda

Securdyne Systems out of Westbrook Maine provided a total bid with installation of $39,897. Initial discussions for the system had placed the costs between $40,000 to $50,000. It is my belief that this bid meets all the requirements of the bid package and is valued at a fair price for the market. Securadyne has done good work for the department in the past and in fact provided the backup server for the department at no cost and with no obligations when our system crashed. I am recommending that the Board of Selectmen award the bid for a replacement video system to Securadyne Systems of Westbrook Maine in the amount of $39,897. I am proposing to pay for this system out of carry forward funds from the Police and Communications budgets from FY14. My records indicate there is a balance of $48,342 left when combining both these budget together.

Back to Agenda

MEMO

TO: **Board of Selectmen**

FROM: **Stephen H. Burns, Interim Town Manager** SHB

DATE: **September 19, 2014**

RE: **Replacement Video System – Police Department**

I write to clarify one point in the Request for Action submitted by Chief Bracy. Regarding the funding of this purchase, the purchase will initially be charged to the Police Department's FY15 equipment budget. When carry-forward funds are eventually approved by the Board of Selectmen, then the cost will be offset by the carry-forward funds as available. This will also be the case with the coin counting machine approved earlier by the Board.

Back to Agenda

TOWN OF YORK, MAINE
Police Department

Douglas P. Bracy
Chief of Police

Mailing Address:
36 Main Street
York, Maine 03909

Dispatch
Non Emergency
(207) 363-4444

Administration
(207)363-1031

Facsimile
(207) 361-6818

www.yorkpolice.org

Committed to excellence

Purchase of Audio Video System

The Town of York is now accepting bids for a complete multi camera audio video system. Bids should be forwarded to the office of the Town Manager, 186 York Street, York, Maine 03909 no later than 3:00 PM on Tuesday, September 16, 2014. Mark the outside of the envelope "Bid for Police Department Audio Video System".

Bids will be opened on Tuesday, September 16, 2014 at 3:30 PM and awarded on Monday, September 22, 2014. The Board of Selectmen reserves the right to accept or reject any or all bids.

Delivery & Installation: Must be made within 90 days of award.

Specifications:

A. One Rackmount Server for "digital" IP Cameras capable of storing 30-60 days of video and comparable to an ExacqVision 4U

B. 16 Port RM Switch

C. Two 20 Megapixel, Panoramic 180 degree Camera comparable to the Arecont Vision AV20185DN

D. Two IP Outdoor 1080P True Day/Night Cameras comparable to the Panasonic WV-SW559

E. One SD Weather Resistant HD Dome Network Camera comparable to the Panasonic WV-SW396A

F. Seven HD Vandal Resistant IP Dome Cameras three of these need to be audio capable, comparable to the Panasonic WV-SF346

G. Outside cameras must be mounted so that the camera is away from the building to aid in keeping moisture out of the units

H. All cabling and installation is to be included

Please note that this system is meant to replace our current system. All hardware including the server, switch and all cameras must be capable of being moved to our new facility. Also note that as a municipal entity the Town of York has tax exempt status and can provide any necessary documentation at the appropriate time.

Back to Agenda

This is a list of the companies where I sent the RFP for the Audio / Video System

1. Seacoast Security – customerservice@seacoastsecurity.com
2. Cunningham Secuirty – info@cunninghamsecurity.com
3. Norris Inc. – daveg@norrisinc.com
4. Securadyne Systems - scott.johnson@securadyne.com
5. Advanced Technology – info@advancetech.com

Back to Agenda

FY14 Budget End

	Without Capital Cruiser	With Capital Cruiser
Police	$18,577.68	$41,467.19
Communications	$29,764.32	$29,764.32
Harbor Management	$6,590.23	$6,590.23
Animal Control	$457.37	$457.37
Total All Budgets	**$55,389.60**	**$78,279.11**

Capital Cruiser Account $22,889.51

Back to Agenda

securadyne systems

RFP RESPONSE

Presented to:

Attn: Douglas P. Bracy
Chief of Police
Town Of York Maine
Police Department
36 Main Street
York, Maine 03909

Project:
Audio Video System

Back to Agenda

securadyne systems

Table of Contents

Executive Summary

Corporate Profile

Proposal Narrative

Cost of Services

Copy of Certificate of Liability Insurance

Data Sheets

Back to Agenda

Executive Summary/Corporate Profile

Privileged and Confidential

We have made a thorough review of the specifications and RFP in the preparation of our response and take no exceptions to the documents. We acknowledge the planned schedule and have prepared our proposal in anticipation of staffing the project and meeting the schedule. Our proposal does not include taxes as the RFP states that the Town Of York has Tax exempt status. Please treat the entire contents of this response as privileged and confidential.

Today you will receive multiple proposals based on the RFP documents; we anticipate that each of these proposals will be complete and in full compliance with the RFP. Due to the schedule, you are tasked with making a quick selection from the responders. We, like all responders, believe that our firm is your best choice. Why should you choose Securadyne System over our competition?

Everyone talks about customer service. But for us it's not just the most important thing, it's the only thing. It's who we are and what we do. Service is Securadyne's first priority and the basis for our companies continuing growth strategy. Providing premium customer service means our clients are happy and want to do business with us in the future and in turn speak highly of us and our solutions to their partners. We are proud of our long standing customer relationships which call all be attributed to the unparalleled service we provide our customers. Want proof? Consider the following listing of clients and the number of years we have worked with them:

Analog Devices: 12 Years	***Chevron: 14 Years***	***Collin County Government: 14 Year***
EMC: 13 Years	***Hannaford: 10 Years***	***Liberty Mutual Insurance: 15 Years***
Town of Cumberland: 2+ Years	***Maine General Hospital: 6+ Years***	***Town of Gorham: 10+ Years***

At Securadyne Systems, we take a 'solutions' approach to value creation. While most systems integrators focus on projects, we focus on the lifecycle of solutions and place a great deal of emphasis on service, maintenance and ongoing optimization.

By 'solutions', we mean outcomes. At each stage of the relationship, we help our customers identify and focus outcomes, which can take the form of physical security risk mitigation and/or productivity gains. We are often able to create positive business outcomes that not only mitigate risk, but also help improve the Town of York's bottom line.

When it comes to comparing responses to the proposals today, keep in mind that we have been providing the **ExacqVision** solution for multiple clients throughout the New England Region. We have extensive experience in both the Municipality & School System Vertical Markets in addition to multi-location campus environments. This project is well within our capabilities and squarely inside our core competency.

We've designated our senior most project manager, Daniel Hawxwell (CSPM) to lead your deployment effort. Dan has many years of experience with the specified solution, but more importantly has managed many customer relationships. It's our goal through this proposal response to show you how Securadyne is unique. We welcome this opportunity to respond, and look forward to a face-to-face meeting to further explain our strategy.

Back to Agenda

Proposal Narrative

Securadyne Systems proposes the following in relation to the Town of York Police Department RFP for ***Purchase of Audio Video System.***

Software

We propose using **ExacqVision** as the software platform for recording video, storing video and video play back. We are recommending it as a leading developer of open architecture, Video Management System (VMS) solutions for security and surveillance applications. Our **ExacqVision** VMS client-server solutions are scalable from a small single camera solution to large scale corporate or campus systems with thousands of cameras. Real-time and recorded video can be viewed, managed and configured from any location on the network.

ExacqVision's open architecture VMS software ensures interoperability with IP cameras, servers and storage systems from manufacturers such as IBM, HP and Dell. Open architecture software allows customers the ability to select the highest quality components from a wide variety of manufacturers. We support all of the leading IP video cameras from Axis Communications, Arecont Vision, IQinvision, GE, Panasonic, Sony, ACTi, CBC Ganz, Vivotek, and more. Open architecture VMS software also provides flexibility of choosing the storage system that best fits the requirements by using the operating systems file system to map the system drives for video storage. Customers may select internal disk storage, RAID, iSCSI, DAS or SAN.

Powerful, Intuitive Video Management System (VMS) Features

- Effectively monitor video, audio and data in real time
  - Customizable video wall
  - Two-way audio
  - Interactive mapping
  - Data integration from retail and access control systems
  - Notification overlays
- Reduce review time and conduct investigations seamlessly
  - Powerful thumbnail and timeline search capabilities
  - Export video in open-standard video formats
  - Or export as a self-contained player with tamper protection

Constantly Expanding Functionality with Included Software Updates

- Get more video management features without replacing your entire video management system
- Includes one year of free software updates (three years on exacqVision NVRs)

Back to Agenda

Ease of Use & Flexible

- Requires little to no training
- Software installs in minutes
- Auto-detection and connection of most IP cameras
- Easily add IP camera licenses at any time
- Per camera licensing with no base server fee

Flexible Deployment

- ExacqVision Professional VMS software comes pre-configured and pre-installed on exacqVision out-of-the-box network video recorders
- Installs on third-party servers

View Video Anywhere with Free Client Software

- Select the interface that works best for you
- Access live and recorded video on Windows, Linux or Mac PCs
- Use the free web service application in any modern browser
- Download the free exacq Mobile app available for iOS, Android, Windows Phone 8 and Kindle Fire

Highly Scalable

- Single client connects to thousands of servers
- Allows you to connect up to 64 analog and 128 IP cameras
- Video analytics for license plate recognition, heat mapping and intrusion detection
- Offers high video throughput with minimal CPU and RAM requirements necessary

CAMERAS

We propose using Panasonic in conjunction with Arecont cameras for their precise identification, flexibility and as well as being well trusted brand names in the industry for many years. Providing high quality equipment that will protect you with room for growth to fit your needs going into the future.

Panasonic has the highest resolution offered in the market today. Arecont provides an industry leading all in one solution for wide area video surveillance.

We have proposed using new IP HD cameras all with **1080p full HDTV** images.

Back to Agenda

Compact size Full HD Dome Network Camera

- Wide angle view but very low lens distortion
- High Resolution(1080p Full HD images up to 30fps)
- Face Detection with Super Dynamic Technology
- Fog and Smoke Reduction
- 2-area VIQS (Variable Image Quality on Specified Area)
- Cropping
- Various Transmission Modes
- SDXC Memory card edge recording
- Smartphone, Tablet PC monitoring
- Waterproof and dustproof with Built-in Microphone
- Vandal Resistant Mechanism
- In-vehicle compatible

180° Panoramic Day/Night Indoor/Outdoor Dome IP Cameras

- Industry's First 8MP, 20MP and 40MP Panoramic Megapixel Cameras
- Forensic Zooming – Zoom Live or After the Event While Recording Full
- Field-of-View in HD – Replace PTZ Devices
- Binning Mode for Strong Low Light Performance in 20MP and 40MP Resolutions
- True Day/Night Functionality with Mechanical IR Cut Filter (DN Models)
- Outdoor Rated IP66 and IK-10 Impact-Resistant Housing
- PoE and Auxiliary Power: 12–48V DC/24V AC
- Easily Adjustable 2-Axis Camera Gimbal with 360° Pan and 90° Tilt
- +/- 5° Electrical Vertical Alignment to Locate Each Sensor Position (180° Series)
- Complete Mounting Options
- Privacy Mask, Motion Detection, Flexible Cropping, Bit Rate Control and
- Multi-Streaming
- Fast Frame Rates
- Dual Encoder H.264/MJPEG
- Made in the USA
- Reduced Overall System Cost

Back to Agenda

SITE SPECIFIC DETAILS

Town of York Maine Police Department

Securadyne Systems is excited to provide you with this turnkey system proposal. Our proposal is per the Town of York Maine Police Department RFP along with an onsite walk thru. Securadyne Systems is able to provide a solution that meets the RFP to our understanding and takes NO exceptions. Our proposal is all inclusive providing a 12TB server with operating software along with all associated equipment for a fully operational system. All labor associated with terminations mounting of equipment, programming, testing, commissioning and training. All electrical Labor and Materials to pull the necessary CAT cable required for the proposal. Below is a list of equipment that will be provide per the RFP.

Product	Description	
WV-SW396A	PAN:SD Weather-Resistant HD Dome Network	1 Each
PWM20GS	PAN:Gooseneck Wall Mount Bracket (Silver	1 Each
PACA2	PAN:Corner Mount, Black	1 Each
WV-SW559	PAN:Camera, IP Outdoor 1080P True Day/Ni	2 Each
PWM484S	PAN:Outdoor wall mount bracket for WV-CW	2 Each
210	ATA:Omni Directional Variable Line Leve	3 Each
CAT5E-PLENUM	*SS:CAT5e Plen Blue 1000'	2 Each
113002	*SS:16-2C Plen Unshld 1000'	1 Each
503631	AES:Switch, POE 16-Port RM Switch	1 Each
S103_BR40	Programming	
EVIP-01	EXA:Exacq single IP camera license	
WV-SF346	PAN:HD Vandel Resistant IP Camera Dome 1	7 Each
AV20185DN-HB	ARE:Camera, 20 Megapixel H.264/MJPEG 18	1 Each
SV-WMT	ARE:Wall Mount Bracket and Cap for AV81	1 Each
IPS-012T-R4-RAID	EXA:ExacqVision IP Server, 4U rackmount	1 Each
S118_BR40	Installation	

Back to Agenda

Cost of Services

Prices listed below is for a 100% turnkey solution with all installation, programming, licenses and training provided. All equipment listed for a functioning system as listed previously will be provide.

TOTAL SOLUTION PRICE –$ 39,897.00

If you have any questions as it relates to this proposal please do not hesitate to contact me directly. Otherwise, we will follow up with you in the very near future as a professional courtesy.

Thank you for this opportunity to quote.

Kind Regards,

Scott Johnson

Scott Johnson
Operations Manager
(207) 464-0255 Direct
(207) 449-2178 Mobile
scott.johnson@securadyne.com

Back to Agenda

Client#: 1696423 124SECURSYS

ACORD™ CERTIFICATE OF LIABILITY INSURANCE

DATE (MM/DD/YYYY) 06/13/2014

THIS CERTIFICATE IS ISSUED AS A MATTER OF INFORMATION ONLY AND CONFERS NO RIGHTS UPON THE CERTIFICATE HOLDER. THIS CERTIFICATE DOES NOT AFFIRMATIVELY OR NEGATIVELY AMEND, EXTEND OR ALTER THE COVERAGE AFFORDED BY THE POLICIES BELOW. THIS CERTIFICATE OF INSURANCE DOES NOT CONSTITUTE A CONTRACT BETWEEN THE ISSUING INSURER(S), AUTHORIZED REPRESENTATIVE OR PRODUCER, AND THE CERTIFICATE HOLDER.

IMPORTANT: If the certificate holder is an ADDITIONAL INSURED, the policy(ies) must be endorsed. If SUBROGATION IS WAIVED, subject to the terms and conditions of the policy, certain policies may require an endorsement. A statement on this certificate does not confer rights to the certificate holder in lieu of such endorsement(s).

PRODUCER
BB&T Insurance Services, Inc.
1071 Founders Blvd.
Suite B
Athens, GA 30606

CONTACT NAME:
PHONE (A/C, No, Ext): 706 354-3893 FAX (A/C, No): 8663172202
E-MAIL ADDRESS:

INSURER(S) AFFORDING COVERAGE	NAIC #
INSURER A : Everest Indemnity Insurance Com	10851
INSURER B : Technology Insurance Company	42376
INSURER C : Philadelphia Indemnity Insuranc	18058
INSURER D :	
INSURER E :	
INSURER F :	

INSURED
Securadyne Systems Intermediate LLC
Securadyne Systems Texas LLC
PO Box 700277
Dallas, TX 75370

COVERAGES CERTIFICATE NUMBER: REVISION NUMBER:

THIS IS TO CERTIFY THAT THE POLICIES OF INSURANCE LISTED BELOW HAVE BEEN ISSUED TO THE INSURED NAMED ABOVE FOR THE POLICY PERIOD INDICATED. NOTWITHSTANDING ANY REQUIREMENT, TERM OR CONDITION OF ANY CONTRACT OR OTHER DOCUMENT WITH RESPECT TO WHICH THIS CERTIFICATE MAY BE ISSUED OR MAY PERTAIN, THE INSURANCE AFFORDED BY THE POLICIES DESCRIBED HEREIN IS SUBJECT TO ALL THE TERMS, EXCLUSIONS AND CONDITIONS OF SUCH POLICIES. LIMITS SHOWN MAY HAVE BEEN REDUCED BY PAID CLAIMS.

INSR LTR	TYPE OF INSURANCE	ADDL INSR	SUBR WVD	POLICY NUMBER	POLICY EFF (MM/DD/YYYY)	POLICY EXP (MM/DD/YYYY)	LIMITS	
A	GENERAL LIABILITY			51GL006369131	08/31/2013	08/31/2014	EACH OCCURRENCE	$1,000,000
	X COMMERCIAL GENERAL LIABILITY						DAMAGE TO RENTED PREMISES (Ea occurrence)	$50,000
	CLAIMS-MADE X OCCUR						MED EXP (Any one person)	$5,000
	X BI/PD Ded:1,000						PERSONAL & ADV INJURY	$1,000,000
							GENERAL AGGREGATE	$2,000,000
	GEN'L AGGREGATE LIMIT APPLIES PER:						PRODUCTS - COMP/OP AGG	$2,000,000
	POLICY X PRO-JECT LOC							$
C	AUTOMOBILE LIABILITY			PHPK1178583	05/22/2014	05/22/2015	COMBINED SINGLE LIMIT (Ea accident)	$1,000,000
	X ANY AUTO						BODILY INJURY (Per person)	$
	ALL OWNED AUTOS / SCHEDULED AUTOS						BODILY INJURY (Per accident)	$
	X HIRED AUTOS / X NON-OWNED AUTOS						PROPERTY DAMAGE (Per accident)	$
								$
A	UMBRELLA LIAB / OCCUR			51CC002251313	08/31/2013	08/31/2014	EACH OCCURRENCE	$10,000,000
	X EXCESS LIAB / X CLAIMS-MADE						AGGREGATE	$10,000,000
	DED X RETENTION $10000							$
B	WORKERS COMPENSATION AND EMPLOYERS' LIABILITY			TWC3415856	05/22/2014	05/22/2015	X WC STATU-TORY LIMITS / OTH-ER	
	ANY PROPRIETOR/PARTNER/EXECUTIVE OFFICER/MEMBER EXCLUDED? Y/N N (Mandatory in NH)	N / A					E.L. EACH ACCIDENT	$1,000,000
	If yes, describe under DESCRIPTION OF OPERATIONS below						E.L. DISEASE - EA EMPLOYEE	$1,000,000
							E.L. DISEASE - POLICY LIMIT	$1,000,000

DESCRIPTION OF OPERATIONS / LOCATIONS / VEHICLES (Attach ACORD 101, Additional Remarks Schedule, if more space is required)
Supplemental Named Insureds - Securadyne Systems LLC, Surveillance Specialties Ltd, Surveillance Specialties Ltd dba Securadyne Systems NE, Securadyne Systems Southeast LLC.

FOR INFORMATION PURPOSE ONLY

CERTIFICATE HOLDER

Securadyne Systems Intermediate, LLC
FOR INFORMATION ONLY
3440 Sojourn Drive
Carrollton, TX 75006

CANCELLATION

SHOULD ANY OF THE ABOVE DESCRIBED POLICIES BE CANCELLED BEFORE THE EXPIRATION DATE THEREOF, NOTICE WILL BE DELIVERED IN ACCORDANCE WITH THE POLICY PROVISIONS.

AUTHORIZED REPRESENTATIVE

Debbie Pressley

© 1988-2010 ACORD CORPORATION. All rights reserved.

Panasonic

Super Dynamic Weather Resistant
HD Dome Network Camera

WV-SW396
WV-SW396A

(Rain Wash Coating Model)

HD/1,280 x 960 H.264 Weather Proof Camera featuring Optical 36x zoom and *Super Dynamic*

Key Features

- 720p HD images up to 30 fps
- Newly developed 1.3 Megapixel double speed MOS Sensor
- Multiple H.264 (High profile) streams and JPEG streams ensure simultaneous real time monitoring and high resolution recording by "UniPhier®", Panasonic's proprietary System LSI platform.
- Full frame (Up to 30 fps) transmission at 1,280 x 960 image size
- **36x optical zoom** with 12x digital zoom enabling 432x zoom.
  72x extra optical zoom at VGA resolution with 12x digital zoom enabling 864x zoom.
- ***Super Dynamic*** and ABS (Adaptive Black Stretch) technologies deliver 128x wider dynamic range compared with conventional cameras.
- ***Face Super Dynamic*** technology ensures clear face image.
- H.264 and MPEG-4 are selectable for system migration.
- High sensitivity with Day/Night function : 0.5 lx (Color), 0.06 lx (B/W) at F1.4 (Wide)
- Adaptive Digital Noise Reduction : 2D-DNR and 3D-DNR integration ensures reduced noise and motion blur in various conditions.
- Superior color reproduction by primary (RGB) color filter
- Electronic sensitivity enhancement : Auto (Up to 16x) / OFF
- Selectable light control modes: Outdoor / Indoor / Fixed electronic shutter
  Outdoor / Indoor : Electronic shutter and ALC lens iris control are automatically controlled depending on the mode and luminance level.
  Fixed electronic shutter. Up to 1/10,000 fixed electronic shutter can be selectable.
- **360 degrees endless Panning**
- Advanced auto tracking : The camera automatically pans and tilts to follow a moving subject and keep it in the center of the image.
- PTZ control can be taken very smoothly on the user friendly GUI with 16 speeds pan/tilt and new "Drag and Zoom" operation enabling finer control. 256 speeds available for system with WV-CU950 system controller.
- Up to 256 preset positions
- 360 map shot: 8 thumbnail images at 45 deg. intervals make it simple to direct the camera easily by clicking on a thumbnail.
- Industrial grade Pan/Tilt/Zoom mechanism for high reliability
- VMD (Video Motion Detection) with 4 programmable detection areas, 15 steps sensitivity level and 10 steps detection size
- Privacy Zone can mask up to 8 private areas, such as house windows and entrances/exits.
- Alarm sources including 3 terminal input, VMD and Panasonic alarm command can trigger actions such as SDHC/SD memory recording, FTP image transfer, E-mail notification, Indication on browser, Alarm terminal output, and Panasonic protocol output.
- Full duplex bi-directional audio allows interactive communication between camera site and monitoring site.
- JPEG image compression ratio can be changed by alarm so that higher quality image can be provided.
- Prioritized stream control : One of the video streams can be prioritized when multiple recorders or client PCs are accessing the camera so that the recorder or the client PC can maintain the frame rate.
- SDHC/SD Memory card slot for manual recording (H.264 / JPEG), alarm recording (H.264 / JPEG) and backup upon network failure (JPEG)
- H.264/MPEG-4 max. bit rate/client and Total bit rate control allows flexible network traffic management. Frame rate priority mode controls bit rate and compression ratio to provide the specified frame rate.
- Multi-language: English / Italian / French / German / Spanish / Russian / Chinese / Japanese
- IPv4 / IPv6 protocol supported
- Analog Monitor output for easier installation
- Supports SSL, DDNS (viewnetcam, RFC2136)
- Still images (JPEG) can be viewed on mobile phones via Internet.
- Onvif compliant model
- IP66 rated water and dust resistant. Compatible with IEC60529 measurement standard, Type 4(UL50), NEMA 4 compliant.
- Dehumidification device for use in various weather conditions
- Built-in fan/heater/sun shield for temperature changes of –50 °C ~ +55 °C (–58 °F ~ +131 °F) (24 V AC), –30 °C ~ +55 °C (–22 °F ~ 131 °F) (PoE+)
- Supports Power over Ethernet Plus (PoE+) IEEE 802.3at(Type2 compliant, Class 4 device)
  * Does not support IEEE802.3af
- **Rain wash coating dome cover (WV-SW396A)**
- Fog and sandstorm compensation

Standard Accessories

- CD-ROM*1 ..... 1 pc.
- Installation Guide ..... 1 pc.

The followings are for installation.
- 8P Alarm Cable ..... 1 pc
- Connector Kit for 24 V AC ..... 1 pc
- Front/Rear Sun Shield ..... 1 set
- Front/Rear Sun Shield Fixing Screws ..... 2 pcs. (incl. 1 spare)
- Code Label*2 ..... 1 pc

*1 The CD-ROM contains the operating instructions (PDFs) and different kinds of tool software programs
*2 This label may be required for network management. The network administrator shall retain the code label.

Optional Accessory

Wall Mount Bracket
WV-Q122 , WV-Q122A

* This catalog is provided for all over the world.
Some accessories may not be available in some countries

- User License Accessory (For MPEG-4)
  BB-HCA5A (NTSC model)
  BB-HCA5CE (PAL model, Korea)*
- User License Accessory (For H.264)
  BB-HCA8A (NTSC model)
  BB-HCA8CE (PAL model, Korea)*

* Required in Korea.

Back to Agenda

Specifications

TV System		NTSC	PAL
Camera	Image Sensor	1/4 type MOS Sensor	
	Effective Pixels	Approx. 1.3 megapixel	
	Scanning Mode	Progressive scan	
	Scanning Area	3.6 mm (H) x 2.2 mm (V) (5/32 inches (H) × 11/100 inches (V))	
	Maximum Illumination	Color: 0.5 lx, B/W: 0.06 lx at F1.4 (Shutter: 1/30 s, AGC: High). Color: 0.031 lx, B/W: 0.004 lx at F1.4 (Shutter: 16/30 s, AGC: High)	
	White Balance	AWC (2,800 ~ 10,000 K), ATW1 (2,700 ~ 6,000 K), ATW2 (2,000 ~ 8,000 K)	
	Light Control Mode	Indoor scene (50 Hz / 60 Hz) / Outdoor scene / Fix shutter	
	Shutter Speed	Fix shutter: OFF (1/30), 3/100, 3/120, 2/100, 2/120, 1/100, 1/120, 1/250, 1/500, 1/1,000, 1/2,000, 1/4,000, 1/10,000	
	Super Dynamic	On/Off	
	Face Super Dynamic	On/Off (only when Super Dynamic: On)	
	Dynamic Range	52 dB typical (Super Dynamic: On, Light Control mode: Indoor)	
	Adaptive Black Stretch	On/Off	
	Fog compensation	On/Off	
	AGC	On(Low) / On(Mid), On(High) / Off	
	Electronic Sensitivity UP	OFF, max. 2/30 s, max. 4/30 s, max. 6/30 s, max. 10/30 s, max. 16/30 s	
	Black and White Mode	Mode: AUTO1 / AUTO2 / AUTO3 / On/Off	
	Digital Noise Reduction	High / Low	
	Video Motion Detection	4 areas, Sensitivity: 15 steps, Detection size: 10 steps	
	Privacy Zone	Up to 8 zones, Gray / Mosaic	
	Auto Image Stabilizer	On/Off	
	Camera Title (OSD)	Up to 20 alphanumeric characters (3 selectable character sizes)	
Lens	Focal Length	3.3 mm ~ 119 mm	
	Zoom Ratio	36x / 72x with extra optical zoom (at VGA)	
	Digital (Electronic) Zoom	12x (Max. 864x combined with extra optical zoom at VGA)	
	Angular Field of View	H: 1.7° (Tele) ~ 60.2° (Wide), V: 1.3° (Tele) ~ 46.0° (Wide)	
	Maximum Aperture Ratio	1:1.4 (Wide) ~ 4.8 (Tele)	
	Focusing Range	2.0 m ~ ∞	
	Aperture Range	F1.4 ~ 22, Close	
Pan and Tilt	Panning Range	360° endless	
	Panning Speed	Manual: approx. 0.065°/s ~ 120°/s, Up to 256 steps (depending on the controller) Preset: up to approx. 400°/s	
	Tilting Range	−15° ~ 195° (upward-level-downward) Tilting angle limit: 10° / 5° / 3° / 0° / −3° / −5° / −10° / −15°	
	Tilting Speed	Manual: approx. 0.065°/s ~ 120°/s, Up to 256 steps (depending on the controller) Preset: up to approx. 400°/s	
	Proportional Pan/Tilt Control	Yes	
	Number of Preset Positions	256	
	Auto Mode	preset sequence / auto pan / auto track / patrol	
	Image Hold	On/Off	
	PTZ Position Display	On/Off	
	Self Return	10 s / 20 s / 30 s / 1 min / 2 min / 3 min / 5 min / 10 min / 20 min / 30 min / 60 min	
	Map Shot	360° map shot / preset map shot	
Browser GUI	Camera Control	Pan/Tilt (16 steps), Zoom, Focus, Click centering, Drag zoom, Iris, Preset position call and program, Auto mode	
	Display Mode	Spot, Quad: Image from 16 cameras can be displayed in 4 different Quad screens or 16 split screen (JPEG only). 20 characters camera title available	
	Camera Title	Up to 20 alphanumeric characters	
	Clock Display	Time: 12H / 24H, Date: 5 formats on the browser. Summer time (Manual/AUTO)	
	Alarm Control	Reset	
	One Shot Capture	A still picture will be displayed on a newly opened window	
	Audio	Mic (Line) Input: On/Off, Volume adjustment: Low / Middle / High Audio Output: On/Off, Volume adjustment: Low / Middle / High	
	SD Memory Data Download	Still or motion images recorded in the SDHC/SD memory card can be downloaded	
	GUI/Setup Menu Language	English, French (Installation required for French)	English, French, Italian, Spanish, German, Russian (Installation required except for English)
	System Log	Up to 100 (Internal), Up to 4,000 (SDHC/SD memory when the recording format is set to JPEG), error logs	
	Supported OS *1	Microsoft® Windows® 8.1, Microsoft® Windows® 8, Microsoft® Windows® 7, Microsoft® Windows Vista®, Microsoft® Windows® XP SP3	
	Supported Browser	Windows® Internet Explorer® 11 (32 bit) Windows® Internet Explorer® 10 (32 bit) Windows® Internet Explorer® 9 (32 bit) Windows® Internet Explorer® 8 (32 bit) Microsoft® Internet Explorer® 7 (32 bit)	
Network	Network IF	10Base-T / 100Base-TX, RJ45 connector	
	Image Resolution *2 *3 — Aspect ratio: [4:3]	H.264: 1,280 × 960/800 × 600/VGA(640 × 480)/QVGA(320 × 240), up to 30 fps MPEG-4: VGA (640 × 480) / QVGA (320 × 240), up to 30 fps JPEG (MJPEG): 1,280 × 960 / 800 × 600 / VGA (640 × 480) / QVGA (320 × 240), up to 30 fps	
	Image Resolution *2 *3 — Aspect ratio: [16:9]	H.264: 1,280 × 720 / 640 × 360 / 320 × 180, up to 30 fps JPEG (MJPEG): 1,280 × 720 / 640 × 360 / 320 × 180, up to 30 fps	
	H.264/MPEG-4 *2 — Transmission Mode	Constant bitrate / Framerate priority / Best effort	
	H.264/MPEG-4 *2 — Frame Rate	1 / 3 / 5 / 7.5 / 10 / 12 / 15 / 20 / 30 fps	
	H.264/MPEG-4 *2 — Bit Rate/Count	64 / 128 / 256 / 384 / 512 / 768 / 1,024 / 1,536 / 2,048 / 3,072 / 4,096 / 8,192* kbps / Unlimited * H.264 mode only	
	H.264/MPEG-4 *2 — Image Quality	Low / Normal / Fine	
	H.264/MPEG-4 *2 — Refresh Interval	0.2 s / 0.25 s / 0.33 s / 0.5 s / 1 s / 2 s / 3 s / 4 s / 5 s	
	H.264/MPEG-4 *2 — Transmission Type	Unicast / Multicast	
	JPEG (MJPEG) — Image Quality	10 steps	
	JPEG (MJPEG) — Transmission Type	Pull / Push	
	Audio Compression	G.726 (ADPCM) 32 kbps / 16 kbps, G.711 64 kbps	
	Audio Mode	Off / Mic (Line) input / Audio output / Interactive (Half duplex) / Interactive (Full duplex)	
	Authentication for Audio	Level 1 only / Level 2 higher / All users	
	Total Bit Rate	64 / 128 / 256 / 384 / 512 / 768 / 1,024 / 2,048 / 4,096 / 6,192 kbps / Unlimited	
	Supported Protocol	IPv6: TCP/IP, UDP/IP, HTTP, HTTPS, RTP, FTP, SMTP, DNS, NTP, SNMP, DHCPv6, ICMP, ARP IPv4: TCP/IP, UDP/IP, HTTP, HTTPS, RTSP, RTP, RTP/RTCP, FTP, SMTP, DHCP, DNS, DDNS, NTP, SNMP, UPnP, IGMP, ICMP, ARP	

• Masses and dimensions are approximate • Specifications are subject to change without notice

TV System		NTSC	PAL
Network	FTP Client	Alarm image transfer, Periodic image transfer (When the FTP periodic transmission is failed, backup to an optional SDHC/SD memory card is available.)	
	No. of Simultaneous Users	Up to 14 users (Depends on network conditions)	
	SDHC/SD Memory Card (Option)	H.264 recording: Manual REC / Alarm REC (Pre/Post) / Schedule REC JPEG recording: Manual REC / Alarm REC (Post) / Backup upon network failure Compatible SD (SDHC) card: Panasonic 256 MB, 512 MB, 1 GB, 2 GB, 4 GB*, 8 GB*, 16 GB*, 32 GB* model. * SDHC card	
	Optional Phone Compatibility	JPEG image, panning/tilting/zoom control, AUX control (by access level)	
	Mobile Terminal Compatibility	iPad, iPhone, iPod touch (iOS 4.2.1 or later) Android™ mobile terminals	
Alarm	Alarm Source	3x Terminal inputs, VMD, Command alarm, Auto back	
	Alarm Actions	SD memory recording, E-mail notification, Image of preset, Camera positioning, Preset position 1-64, FTP image transfer, Terminal output, Panasonic protocol output, Auto pan	
	Alarm Log	With SD memory card: 5,000 logs, Without SD memory card: 1,000 logs	
	Schedule	Alarm/VMD, Access permission, Preset position call, Position refresh, H.264 recording	
Input/Output	Monitor Output (for adjustment)	1.0 V [P-P] / 75 Ω, NTSC composite, BNC	1.0 V [P-P] / 75 Ω, PAL composite, BNC
	Microphone/Line Input	MIC IN and Line IN are selectable. ø3.5 mm monaural mini jack (Applicable microphone: Plug-in power type). Supply voltage: 2.5 V ±0.5 V, Input impedance: approx. 2 kΩ	
	Audio Output	ø3.5 mm stereo mini jack (monaural output) Line level	
	External I/O Terminals	ALARM IN 1 (DAY/NIGHT IN), ALARM IN 2 (ALARM OUT) ALARM IN 3 (AUX OUT)	
General	Safety/EMC Standard	UL (UL60065-1), FCC (Part15 ClassA), C-UL (CAN/CSA-C22.2 No.60950-1), DOC (ICES-003 ClassA)	CE (EN55022 ClassB, EN55024)
	Power Source/Consumption	24 V AC (50 Hz / 60 Hz) approx. 43 W Heater On PoE Plus, approx. 24.0 W (IEEE802.3at Type2 compliant, Class4 device) Heater On	
	Ambient Operating Temperature/Humidity	−30°C ~ +55°C (−58°F ~ 131°F) 24 VAC) *4 *5 −30°C ~ +55°C (−22°F ~ 131°F) (PoE Plus) 90% or less (without condensation)	
	Impact Protection	IEC 62262 2002 IK10 (Impact energy 20J)	
	Water and Dust Resistance	IP66 rated water and dust resistant. Compatible with IEC60529 Measurement standard Type 4 (UL50), NEMA 4 compliant	
	Dimensions	ø229 mm × 379 mm (ø9-1/32" × 14-23/25") *6 Diameter of the dome: 150 mm (5-29/32")	
	Mass (approx.)	4.6 kg (10.15 lbs.)	

*1 Microsoft Windows 7 Starter, Microsoft Windows Vista Starter and Microsoft Windows XP Professional 64-bit Edition are not supported. *2 H.264 and MPEG-4 are alternative. *3 [4:3] and [16:9] are alternative. *4 When used with a continuous power supply (camera external temperature must be above -10°C), and installation and startup should be done at above -30°C). *5 When using this product at temperatures of -40°C or below, use the power supply between 24 V AC and 27 V AC. *6 For further information about compatible devices, refer to our website (http://security.panasonic.com/pss/security/support/info.html)

Part Names and Functions

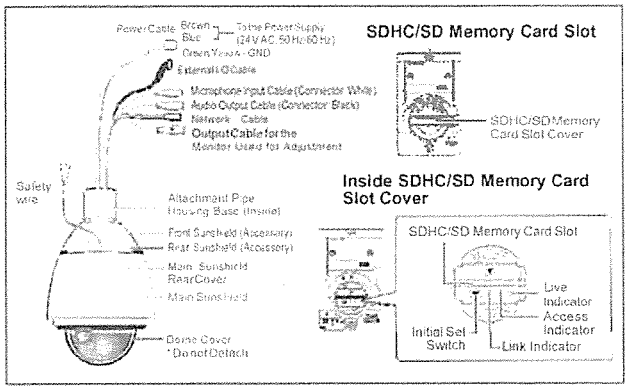

Appearance

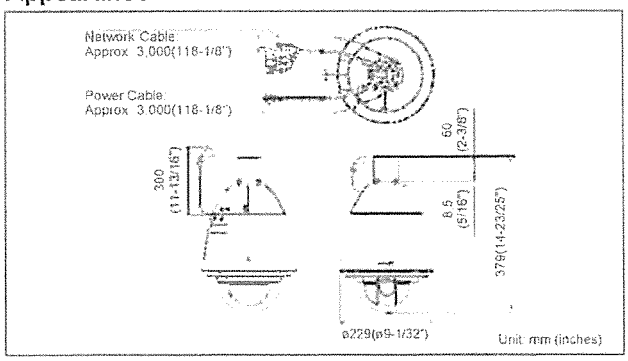

Trademarks and registered trademarks
- Microsoft, and Windows are registered trademarks of Microsoft Corporation in the U.S. and other countries
- iPad, iPhone and iPod touch are registered trademarks of Apple Inc.
- UniPhier is a registered trademark of Panasonic Corporation
- "MEGA Super Dynamic" and "i-PRO SmartHD" logos are trademarks or registered trademarks of Panasonic Corporation
- ONVIF and the ONVIF logo are trademarks of ONVIF Inc.

Important
- Safety Precaution: Carefully read the important information, Installation Guide and operating instructions before using this product
- Panasonic cannot be responsible for the performance of the network and/or other manufacturers' products used on the network

DISTRIBUTED BY:

Panasonic

http://security.panasonic.com
http://www.facebook.com/PanasonicNetworkCamera

Back to Agenda

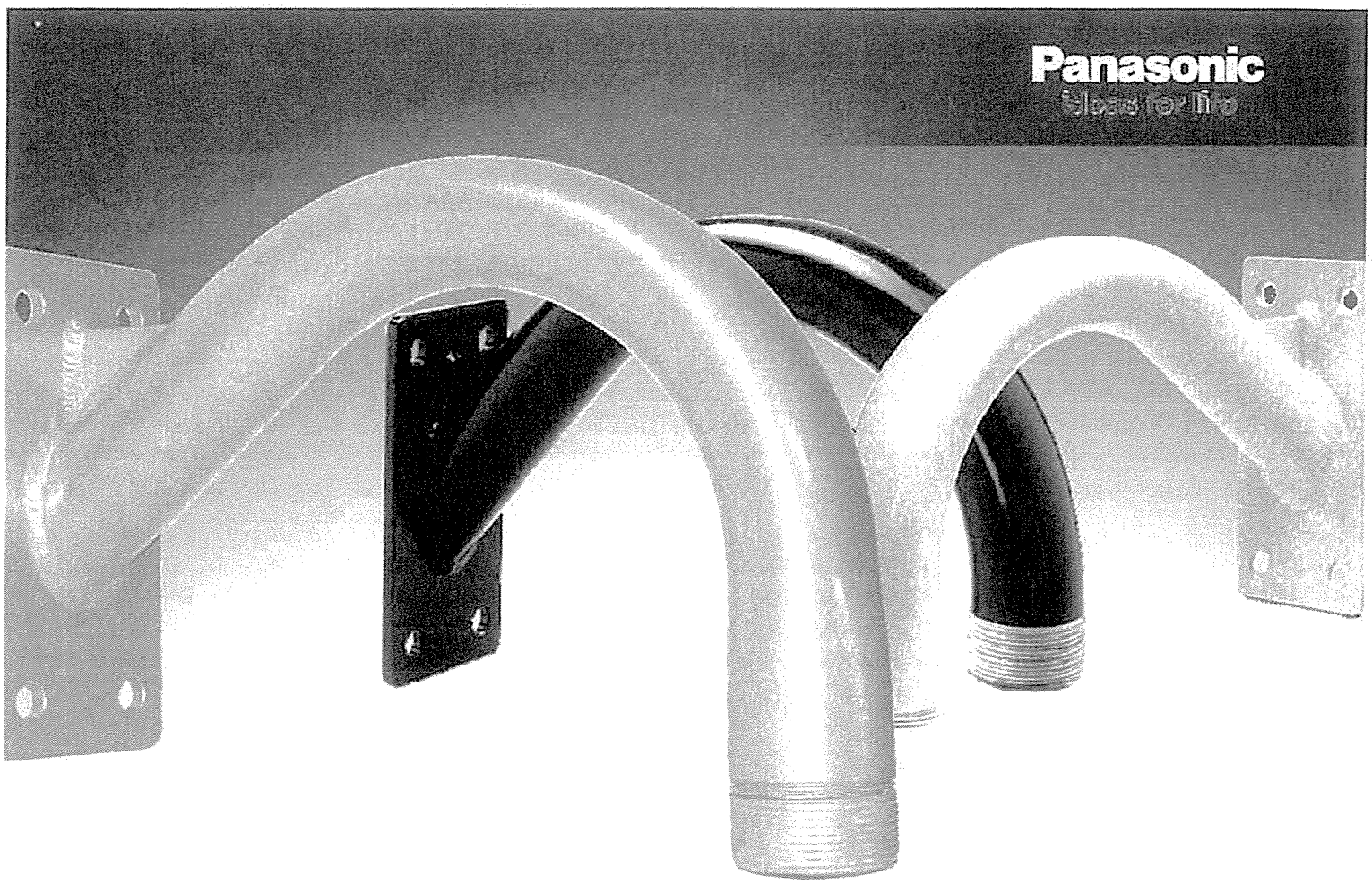

PWM20G, PWM20GB, & PWM20GS

Brackets: Wall Mounts

- Durable powdercoat finish
- All aluminum construction
- 1 ½" pipe thread on end for quick and easy dome mounting
- 50 lb. load rating

Bid Specifications

The wall mount bracket shall be a Panasonic model PWM20G, PWM20GB, or PWM20GS or equivalent. The PWM20G, PWM20GB, and PWM20GS are all aluminum wall mount brackets for all PODV7, POD9, PODV9, PPFD dome, the WV-CW964/CW974/NW964/SW395 dome network cameras and pendant mount Ready-To-Go dome housings. The bracket has a 1½" NPT pipe tread for mount of the dome housing. Both brackets feature a protective powdercoat finish. The PWM20G has a black finish, where as the PWM20GB has a beige finish and the PWM20GS has a silver finish. The wall mount can be combined with the PACA2 & PACA2B for corner mount applications and with the PAPM3 & PAPM3B for pole mount applications.

Specifications

SHIPPING SPECIFICATIONS	
PWM20G	3 Lbs. (1.4 kg) 14" x 16" x 10" (356 x 406 x 254mm)
PWM20GB	3 Lbs. (1.4 kg) 14" x 16" x 10" (356 x 406 x 254mm)
PWM20GS	3 Lbs. (1.4 kg) 14" x 16" x 10" (356 x 406 x 254mm)

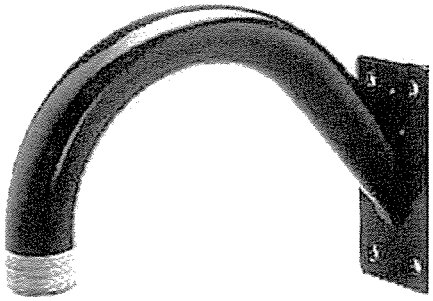

Architectural Drawings

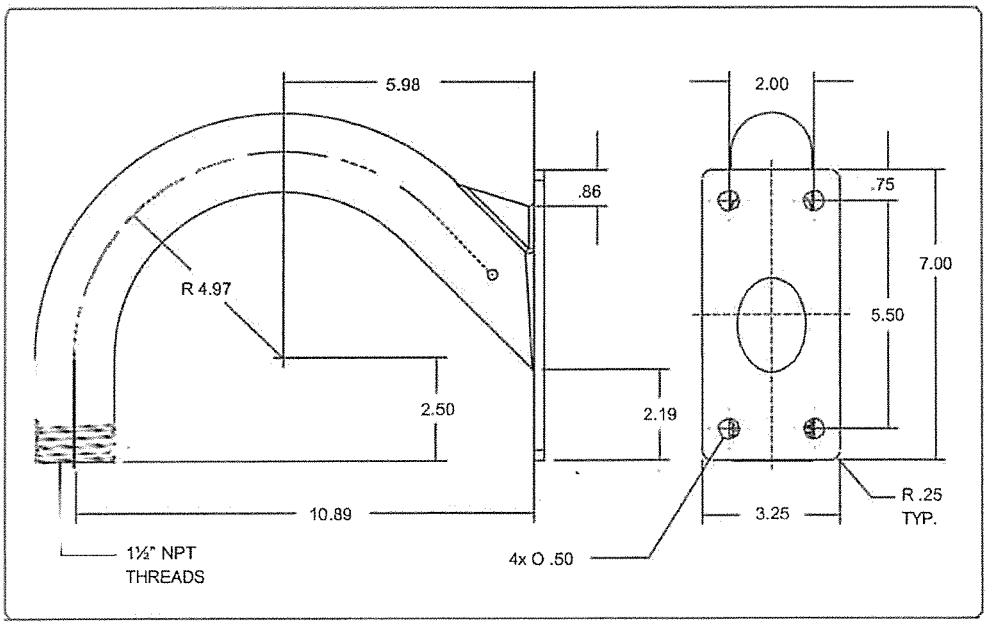

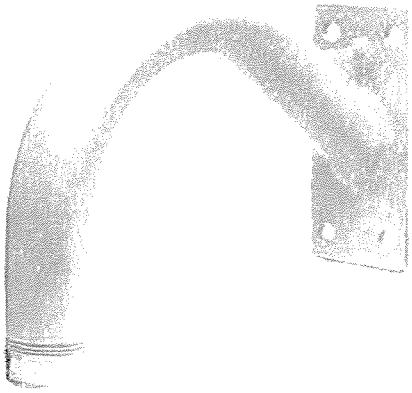

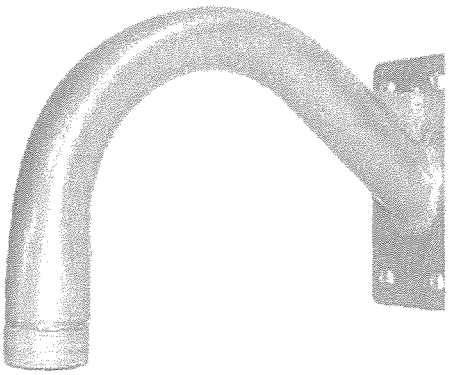

Panasonic Service Center
115 Gordon Drive
Suite 250-B
Suwanee, GA 30024
(770) 995-5138

Design and specifications subject to change without notice.

Panasonic

Super Dynamic Full HD Vandal Resistant Dome Network Camera

WV-SW559
WV-SW558

Full HD / 1,920 x 1,080 H.264 Vandal Resistant Network Camera featuring *Super Dynamic*

Key Features

- Super high resolution at Full HD/1,920 x 1,080 created by 3.1 Megapixel high sensitivity MOS Sensor.
- 1,080p Full HD images up to 30 fps and 360p image up to 30fps simultaneously.
- Combining enhanced "UniPhier", Panasonic's proprietary System LSI platform and ***2 areas VIQS*** (Variable Image Quality on Specified area) function can decrease maximum 50%*1 network bandwidth.
- Cropping function enables to provide whole image (1,920 x 1,080) and the part image (640 x 360) simultaneously.
  Up to 4 image capture areas can be specified, and it is also possible to control the sequence.
- Multiple H.264 (High profile) streams and JPEG streams ensure simultaneous real time monitoring and high resolution recording by enhanced "UniPhier".
- ***Super Dynamic*** and ABS (Adaptive Black Stretch) technologies deliver 128x wider dynamic range compared to conventional cameras.
- Face Super Dynamic Range technology ensures clear face image.
- High sensitivity with Day & Night (IR) function:0.5 lx (Color), 0.06 lx (B/W) at F1.3 (WV-SW559)
- High sensitivity with Day & Night (Electrical) function:0.5 lx (Color), 0.3 lx (B/W) at F1.3 (WV-SW558)
- Using Panasonic distinctive LDC (Lens Distortion Compensation) function, natural image without distortion can be monitored though using wide angle lens.
- ABF (Auto Back Focus) ensures easy installation.
- ABF ensures stable focus in both color and B/W modes. (WV-SW559)
- Digital Noise Reduction: 3D-DNR ensures noise reduction in various conditions.
- Progressive scan ensures clear images with less motion blur and no tearing even when the subject is moving.
- Superior color reproduction by primary (RGB) color filter.
- Electronic sensitivity enhancement: Auto (Up to 16x) / OFF
- Selectable light control modes: Outdoor scene / Indoor scene (50 Hz) / Indoor scene (60 Hz) / ELC / Fixed electronic shutter
  Outdoor scene: Electronic shutter and ALC lens iris control are automatically controlled depending on the mode and luminance level.
  Indoor scene (50 Hz / 60 Hz): Flicker caused by fluorescent lightning will be automatically compensated.
  ELC: Up to 1/10,000 Electronic shutter is automatically applied for a fix iris lens.
  Fixed electronic shutter: Up to 1/10,000 fixed electronic shutter can be selectable.
- 3x Extra optical zoom at 360p resolution. (Picture Mode : 2 Mega pixel [16:9])
- VMD (Video Motion Detection) with 4 programmable detection areas, 15 steps sensitivity level and 10 steps detection size
- Privacy Zone can mask up to 2 private areas, such as house windows and entrances/exits.
- 2x, 4x digital zoom controlled by browser.
- Camera title display: Up to 20 alphanumeric characters on the browser
- Alarm sources including 3 terminal input, VMD and Panasonic alarm command can trigger actions such as SDXC/SDHC/SD memory recording(WV-SW559), FTP image transfer, E-mail notification, Indication on browser, Alarm terminal output, and Panasonic alarm protocol output.
- Full duplex bi-directional audio allows interactive communication between camera site and monitoring site. (WV-SW559)
- JPEG Image compression ratio can be changed by alarm so that higher quality image can be provided.
- Prioritized stream control: One of the video streams can be prioritized when multiple recorders or client PCs are accessing the camera so that the recorder or the client PC can maintain the frame rate.
- SDXC/SDHC/SD Memory card slot for manual recording (H.264 / JPEG), alarm recording (H.264 / JPEG) and backup upon network failure (JPEG) (WV-SW559)
- H.264 max. bit rate/client and Total bit rate control allows flexible network traffic management. Frame rate priority mode controls bit rate and compression ratio to provide the specified frame rate.
- Internet mode: H.264 images can be transmitted over HTTP protocol.
- Multi-language: English / Italian / French / German / Spanish / Russian / Chinese / Japanese
- IPv4/IPv6 protocol supported.
- Supports SSL, DDNS (viewnetcam, RFC2136)
- Still images (JPEG) can be viewed on mobile phones via the Internet.
- Onvif compliant model
- IP66 rated water and dust resistant. Compatible with IEC60529 measurement standard.
- Vandal resistant mechanism for high reliability
- 2.8 ~ 10.0 mm, 3.6x Varifocal Auto Iris Lens

*1 Compared with WV-NP502. Reduction effect may vary depending on object and image quality setting conditions.

Standard Accessories

- Installation Guide ..... 1 pc
- CD-ROM*1 ..... 1 pc
- Code label*2 ..... 1 pc

The following parts are used during installation procedures.

- 4P alarm cable ..... 1 pc
- Camera attachment ..... 1 pc
- 2P power cable ..... 1 pc
- Fixing screws (M4 x 8 mm) ..... 5 pcs. (of them, 1 for spare)
- Base cover ..... 1 pc
- Mount bracket ..... 1 pc
- Bit for tamperproof screw ..... 1 pc
- Waterproof tape ..... 1 pc

*1 The CD-ROM contains the operating instructions and different kinds of tool software programs.
*2 This label may be required for network management. The network administrator shall retain the code label.

Optional Accessories

Embedded Ceiling Mount Bracket **WV-Q169**	Smoke Dome Cover **WV-CW4S**

Back to Agenda

Specifications

TV System		NTSC / PAL
Camera	Image Sensor	1/3 type MOS Sensor
	Effective Pixels	Approx. 3.1 megapixel
	Scanning Mode	Progressive scan
	Scanning Area	4.51 mm (H) x 3.38 mm (V) (3/16 inches (H) x 1/8 inches (V))
	Minimum Illumination	WV-SW559 Color: 0.5 lx, B/W: 0.05 lx (F1.3, Auto slow shutter: Off (1/30s), Gain On(High)) Color: 0.03 lx, B/W: 0.004 lx (F1.3, Auto slow shutter: Max. 16/30s, Gain On(High))*1 WV-SW558 Color: 0.5 lx, B/W: 0.3 lx (F1.3, Auto slow shutter: Off (1/30s), Gain On(High)) Color: 0.03 lx, B/W: 0.02 lx (F1.3, Auto slow shutter: Max. 16/30s, Gain On(High))*1
	White Balance	AWC(2,000~10,000K), ATW1(2,700~6,000K), ATW2(2,000~6,000K)
	Light Control Mode	Outdoor scene: Automatic integration of ALC and ELC Indoor scene(50 Hz): Automatic integration of ALC and ELC (up to 1/100 s) Indoor scene(60 Hz): Automatic integration of ALC and ELC (up to 1/120 s) ELC: (up to 1/10,000 sec.)
	Shutter Speed	Fix shutter: 1/30, 3/100, 3/120, 2/100, 2/120, 1/100, 1/120, 1/250, 1/500, 1/1,000, 1/2,000, 1/4,000, 1/10,000 (only at Super Dynamic Off)
	Super Dynamic	ON / OFF
	Dynamic Range	52 dB typ. (Super Dynamic: ON, Light Control Mode: indoor)
	Face Super Dynamic	ON / OFF (Only at Super Dynamic: ON)
	Adaptive Black Stretch	ON / OFF (Only at Super Dynamic: OFF)
	AGC	ON (LOW, MID, HIGH) / OFF
	Electronic Sensitivity UP	OFF / AUTO (Max. 2x(2/30 s), 4x(4/30 s), 6x(6/30 s), 10x(10/30 s), 16x(16/30 s))
	Day & Night	WV-SW559: IR Mode: AUTO1 / AUTO2 / ON / OFF, Level: High / Low, with external control WV-SW558: Electrical Mode: OFF / AUTO
	Digital Noise Reduction	High / Low
	Video Motion Detection	4 areas, Sensitivity: 15 steps, Detection size: 10 steps
	Privacy Zone	Up to 2 zones, Gray
	Upside Down	ON / OFF
	VIQS	Up to 2 zones
	Camera Title /OSD	Up to 20 characters (alphanumeric characters, marks)
	Focus Adjustment	ABF/MANUAL
	Lens Distortion Compensation	256 steps
Lens	Focal Length	2.8mm~10mm, 3.6x (8.4mm~30mm 10.8x with Extra optical zoom (at 360P))
	Angular Field of View*	H: 24.2°(TELE) ~ 86.6°(WIDE) V: 13.50°(TELE) ~ 47.57°(WIDE)
	Maximum Aperture Ratio	1:1.3 (WIDE) ~ 1:3.0 (TELE)
	Focusing Range	0.3 m ~ ∞
Adjusting Angle		Horizontal: 180° (clockwise), 160° (counterclockwise) Vertical: ±75°, Image tilt adjustment range: ±100°
Browser GUI	Cropping	H.264(2) / JPEG(VGA or 640 x 360) / JPEG(QVGA or 320 x 180) Up to 4 image capture areas can be specified
	Camera Control	Brightness, AUX ON / OFF, Zoom (1x, 2x 4x)
	Display Mode	Spot, Quad: Image from 16 cameras can be displayed in 4 different Quad screens or 16 split screen (JPEG only). 20 characters camera title available.
	Digital Zoom	1x, 2x, 4x controlled by browser GUI
	Camera Title	Up to 20 alphanumeric characters
	Clock Display	Time: 12H/24H, Date: 5 formats on the browser, Summer time (Manual)
	Alarm Control	Reset
	One Shot Capture	A still picture will be displayed on a newly opened window
	Audio	Mic (Line) Input: ON / OFF Volume adjustment: Low / Middle / High, Audio Output: ON / OFF Volume adjustment: Low / Middle / High (Only at WV-SW559)
	SD Memory Data Download	Stored images/sequences on SD/SDHC/SD memory card are downloaded (Only at WV-SW559)
	GUI/Setup Menu Language	English / Italian / French / German / Spanish / Russian / Chinese / Japanese
	System Log	Up to 100 (Internal). Up to 4,000 (SDXC/SDHC/SD memory when the recording format is set to JPEG.) error logs (Only at WV-SW559)
	Supported OS *1 *2	Microsoft® Windows® 7, Microsoft® Windows Vista®, Microsoft® Windows® XP SP3
	Supported Browser	Windows® Internet Explorer® 9.0 (32 bit), Windows® Internet Explorer® 8.0 (32 bit), Windows® Internet Explorer® 7.0 (32 bit), Microsoft® Internet Explorer® 6.0 SP3
Network	Network IF	10Base-T / 100Base-TX, RJ-45 connector
	Image Resolution (Image Capture Mode / Frame Rate)	2 mega pixel (16:9): H.264: 1,920 x 1,080 / 640 x 360 / 320 x 180, up to 30 fps; JPEG (MJPEG): 1,920 x 1,080 / 640 x 360 / 320 x 180, up to 30 fps
		1.3 mega pixel (16:9): H.264: 1,280 x 720 / 640 x 360 / 320 x 180, up to 30 fps; JPEG (MJPEG): 1,280 x 720 / 640 x 360 / 320 x 180, up to 30 fps
		1.3 mega pixel (4:3): H.264: 1,280 x 960 / VGA (640 x 480) / QVGA (320 x 240), up to 30 fps; JPEG (MJPEG): 1,280 x 960 / VGA (640 x 480) / QVGA (320 x 240), up to 30 fps
		3 mega pixel (4:3): H.264: 1,280 x 960, up to 15 fps; JPEG (MJPEG): 2,048 x 1,536, up to 15 fps
	H.264 *3 *4	Transmission Mode: Constant bitrate / Framerate priority / Best effort
		Frame Rate: 1 / 3 / 5 / 7.5 / 12 / 10 / 15 / 20 / 30 fps
		Bit Rate/Client: 64 / 128 / 256 / 384 / 512 / 768 / 1,024 / 1,536 / 2,048 / 3,072 / 4,096 / 8,192 / 10,240 / 12,288 / 14,336 kbps
		Image Quality: LOW / NORMAL / FINE
		Refresh Interval: 0.2 / 0.25 / 0.33 / 0.5 / 1 / 2 / 3 / 4 / 5 s
		Transmission Type: UNICAST / MULTICAST
	JPEG	Image Quality: 10 steps
		Refresh Interval: 0.1 fps ~ 30 fps
		Transmission Type: PULL / PUSH
	Audio Compression *Only at WV-SW559	G.726 (ADPCM) 32 kbps / 16 kbps, G.711 64 kbps
	Audio Mode *Only at WV-SW559	OFF / Mic (Line) input / Audio output / Interactive (Half duplex) / Interactive (Full duplex)
	Administration Level *Only at WV-SW559	Level 1 only / Level 2 higher / All users
	Total Bit Rate	64 / 128 / 256 / 384 / 512 / 768 / 1,024 / 2,048 / 4,096 / 8,192 kbps / Unlimited
	Supported Protocol	IPv4, TCP/IP, UDP/IP, HTTP, HTTPS, RTP, RTP, SMTP, DNS, NTP, SNMP, DHCP, ARP, IPv4, TCP/IP, UDP/IP, HTTP, HTTPS, RTSP, RTP, RTP/RTCP, FTP, SMTP, DHCP, DNS, DDNS, NTP, SNMP, UPnP, IGMP, ICMP, ARP
	FTP Client	Alarm image transmission, FTP periodic transmission (When the FTP transmission is failed, backup on an optional SDXC/SDHC/SD memory card is available.) *Only at WV-SW559
	No. of Simultaneous Users	Up to 14 users (Depends on network conditions)
	SDXC/SDHC/SD Memory Card (Option) *Only at WV-SW559	H.264 recording: Manual REC / Alarm REC (Pre/Post) / Schedule REC JPEG recording: Manual REC / Alarm REC (Post): Backup upon network failure. Compatible SD (SDHC/SDXC) cards: Panasonic 1GB, 2GB, 4GB*, 8GB*, 16GB*, 32GB*, 64GB** model *SDHC card, **SDXC card (except miniSD card and microSD card)
	Cellular Phone Compatability	JPEG image

TV System		NTSC / PAL
Network	Mobile Terminal Compatability*	iPad, iPhone, iPod touch (iOS 4.2.1 or later), Android™ mobile terminals
Alarm	Alarm Source	WV-SW559 3 terminals input, VMD, Command alarm WV-SW558 1 terminal input, VMD, Command alarm
	Alarm Actions	SDXC/SDHC/SD memory recording*, E-mail notification, Indication on browser, FTP image transfer, Panasonic protocol output, *Only at WV-SW559
	Alarm Log	With SDXC/SDHC/SD memory card*: 5,000 logs, without SDXC/SDHC/SD memory card: 1000 logs *Only at WV-SW559
	Schedule	Alarm / VMD / Access permission / H.264 recording
Input/ Output	Monitor Output (for adjustment)	VBS: 1.0 V [p-p]/75 Ω, NTSC composite, RCA Jack / VBS: 1.0 V [p-p]/75 Ω, PAL composite, RCA Jack
	Microphone/Line Input *Only at WV-SW559	MIC IN and Line IN are selectable. ø3.5 mm stereo mini jack (monaural input) (Applicable microphone: Plug-in power type) Supply voltage: 2.5 V ±0.5 V, Input impedance: approx. 2 kΩ
	Audio Output *Only at WV-SW559	ø3.5 mm stereo mini jack (monaural output) Line level
	External I/O Terminals	WV-SW559 ALARM IN 1/DAY/NIGHT IN, ALARM IN 2/ALARM OUT, ALARM IN 3/AUX OUT WV-SW558 ALARM IN, ALARM OUT, AUX OUT
General	Safety/EMC Standard	UL(UL60950-1) FCC(Part15ClassA), C-UL (CAN/CSA-C22.2 No.60950-1), DOC (ICES003 ClassA) / CE, IEC60950-1, (EN55022 ClassB, EN55024)
	Power Source and Power Consumption	WV-SW559 12V DC 850mA*, PoE (IEEE802.3af compliant) / PoE 48V 160mA (Class0 device) WV-SW558 12V DC 500mA*, PoE (IEEE802.3af compliant) / PoE 48V 175mA (Class0 device) * FOR UL LISTED MODELS), ONLY CONNECT 12 V DC CLASS 2 POWER SUPPLY
	Ambient Operating Temperature	-40 °C ~ +50 °C (-40 °F ~ 122 °F)
	Ambient Operating Humidity	Less than 90 % (no condensation)
	Water and Dust Resistance	IP66, IEC60529 measuring standard compatible
	Shock Resistance	Compliant with 50 J (IEC 60068-2-75) / IK10 (IEC 62262)
	Dimensions	ø164 mm x 146.5 mm (H) x 191.5 mm (W) (ø6-15/32 inches x 5-7/8 inches (H) x 7-17/32 inches (W)) (Base Cover)
	Mass (approx.)	1.6 kg (3.53 lbs)
	Finish	Main body: Aluminum die cast, light gray. Dome section: Clear polycarbonate resin

*1 Converted value
*2 If "1.3 megapixel [4:3]" is selected for the imaging mode, the viewing angle will become narrower
*3 Refer to "Notes on Windows Vista® / Windows® 7" on the provided CD-ROM for further information about system requirements for a PC and precautions when using Microsoft® Windows® 7 or Microsoft® Windows Vista®
*4 When using IPv6 for communication, use Microsoft® Windows® 7 or Microsoft® Windows Vista®
*5 Transmission for 2 streams can be individually set in the same compression method
*6 For further information about compatible devices, refer to our website (http://panasonic.net/pss/security/support/info.html).

Part Names and Functions

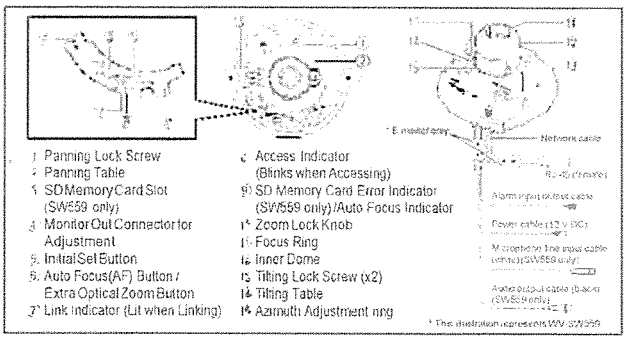

Appearance

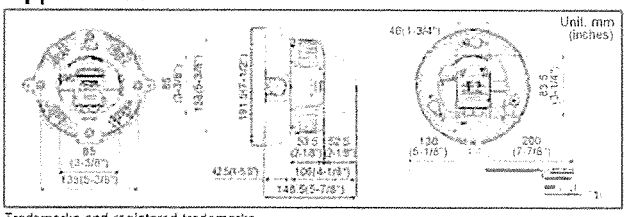

Trademarks and registered trademarks
- Microsoft, and Windows are registered trademarks of Microsoft Corporation in the U.S. and other countries
- iPad, iPhone and iPod touch are registered trademarks of Apple Inc.
- UniPhier is a registered trademark of Panasonic Corporation.
- "MEGA Super Dynamic" and "i-PRO SmartHD" logos are trademarks or registered trademarks of Panasonic Corporation
- ONVIF and the ONVIF logo are trademarks of ONVIF Inc.
- All other trademarks identified herein are the property of their respective owners

Important
- Safety Precaution: Carefully read the operating instructions and installation manual before using this product
- Panasonic cannot be responsible for the performance of the network and/or other manufacturers' products used on the network

- All TV pictures are simulated
- Masses and dimensions are approximate
- Specifications are subject to change without notice
- These products may be subject to export control regulations
- All product pictures are NTSC models

DISTRIBUTED BY:

Panasonic

http://security.panasonic.com
http://www.facebook.com/PanasonicNetworkCamera

Printed in Japan

Back to Agenda

PS484S Series

Includes: PCM484S, PHM484S, PPM484S, PWM484S

Shroud Pendant Adapter

PRODUCT FEATURES

- Wall or pendant mount for Panasonic camera models WV-NW474S, WV-CW474, WV-NW484S and WV-CW484 series
- Durable all aluminum construction
- 1 1/2" NPT thread for easy wall/pendant mounting
- Gooseneck bracket, pole mount, corner mount and ceiling mount kits are available for simple ordering and inventory management
- Indoor or outdoor use

CONFIGURATIONS

Part #	Description
PS484S	Panasonic shroud pendant adapter
PCM484S	Panasonic shroud pendant adapter w/PWM20GB gooseneck and PACA2B corner mount
PHM484S	Panasonic shroud pendant adapter w/PPMF12D black ceiling mount adapter
PPM484S	Panasonic shroud pendant adapter w/PWM20GB gooseneck and PAPM3B pole mount
PWM484S	Panasonic shroud pendant adapter w/PWM20GB gooseneck wall bracket

Note: All pendant adaptors include hardware packets with spacers, screws (for camera), sealing grommet, and tape. All wall mount units to be attached to additional bracket would get wall mount hardware to attach to that bracket (but not to the wall itself).

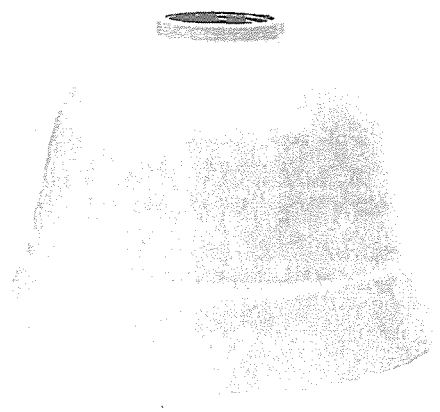

PS484S

DESCRIPTION

The PS484S is a cast aluminum top cover that bolts to the base of Panasonic camera models WV-NW474S, WV-CW474, WV-NW484S and WV-CW484 series to provide a clean, attractive installation. Several kits (see below) are available to tailor the adapter to a wide variety of mounting requirements.

Corner Mount Kit - PCM484S

Hanging Mount Kit - PHM484S

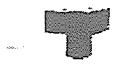

Pole Mount Kit - PPM484S

Wall Mount Kit - PWM484S

we get IT!

Panasonic ideas for life

Product specifications are subject to change without notice.
© Panasonic System Solutions Company. All rights reserved.

Back to Agenda

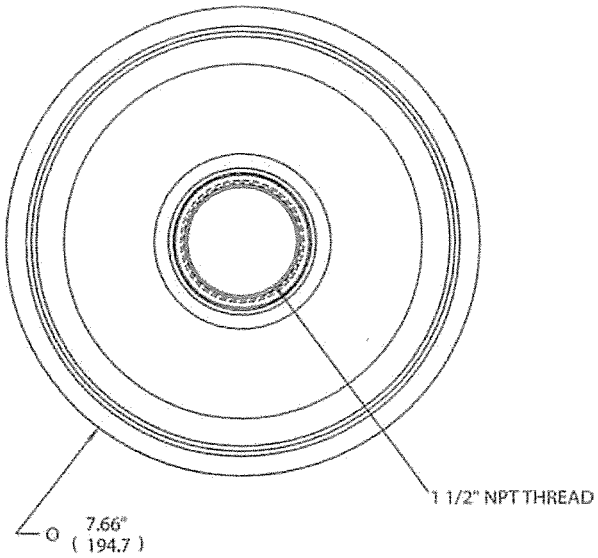

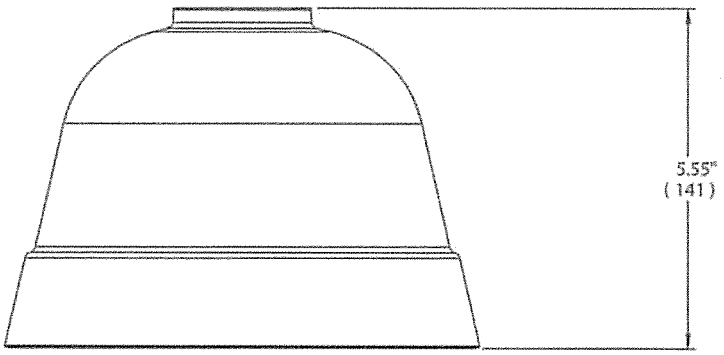

Panasonic ideas for life

DISTRIBUTED BY:

Panasonic System Solutions Company
Unit of Panasonic Corporation of North America
Security Systems
Executive Office: Three Panasonic Way, Secaucus, NJ 07094, T# 1-877-733-3689

www.panasonic.com/security

Back to Agenda

210

Premium Omnidirectional Button Style Microphone with Adjustable Line-Level

Description

The Astatic 210 is a miniature-boundary microphone designed for installation in security, ambient monitoring and observation applications. The output level is variable from -50dBv (3.2mV) to -10.5dBV (300mV) @ 1µBar which is designed to interface with security cameras, digital video recorders and other observation and recording devices.

Astatic's internal audio limiter circuitry tames high sound pressure levels and improves intelligibility by protecting the audio signal from distorting sensitive recording circuitry in cameras and digital recorders. The integrated volume control is located on the side of the microphone and is protected from tampering when the microphone is installed. The integrated 150Hz, 6dB/oct high-pass filter attenuates unwanted low frequency energy.

8 to18 VDC (70mA) is required to power the microphone (not supplied). The connection is made through a removable 3.5mm terminal block plug connector on the opposite end of the microphone. The connector accepts DC power and outputs an unbalanced, amplified signal.

The Astatic 210 housing is all-metal, designed for commercial applications. The threaded housing makes for easy installation into ceilings, walls, tables and other surfaces. Rubber isolation bushings and metal nut/washer hardware are also provided.

RF Resistant Architecture

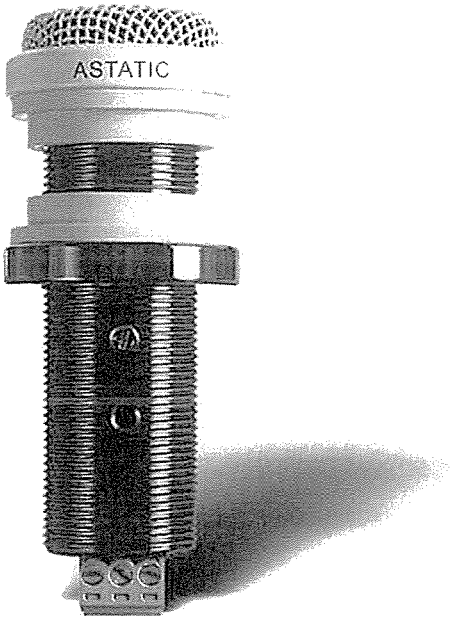

Features

- Adjustable Line-level output
- Omnidirectional pick-up pattern
- Integrated high-pass filter for improved intelligibility and voice articulation
- Integrated limiter maintains near/far signal integrity
- All-metal housing suitable for commercial applications
- Mounting hardware included
- RF (radio frequency) Resistant Architecture
- Shock-absorbing polymer bushings included
- Inconspicuous design

Dimensional Drawing

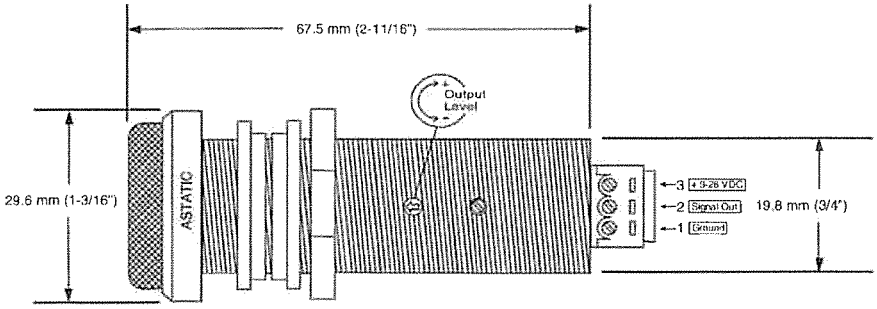

CAD AUDIO
ASTATIC COMMERCIAL

Back to Agenda

210

Premium Omnidirectional Button Style Microphone with Adjustable Line-Level

Specifications†

Operating Principle ..... Condenser
Polar Pattern ..... Omnidirectional
Frequency Response ..... 120Hz -18KHz
Sensitivity ..... Adjustable, -50dBV (3.2mV) to -10.5dBV (300mV) @ 1 µBar
Impedance ..... 50 ohms
Maximum SPL 100dB
Self Noise 22dBA
Power Requirements ..... 8 to 18VDC, 70mA
Connector ..... 3.5 mm terminal block plug with 180 degree wire-to-plug orientation, accepting 30 to 14AWG size wire.
Polarity ..... Positive pressure on diaphragm corresponds to positive voltage on pin 2.
Finish ..... Durable matte-white urethane
Dimensions ..... (See drawing)
Net Weight [Mass] ..... 2.4oz [.07Kg]
Packaged Weight [Mass] ..... 5.4oz [.15Kg]
RF Immunity ..... Meets or exceeds EN55103-2, E1, E2, E3 and E4

RoHS Compliant

†Specifications subject to change without notice.

Included Accessories ..... 2 rubber bushings, hex nut and washer.

Frequency Response

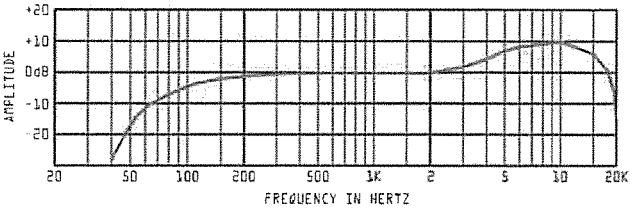

Polar Pattern

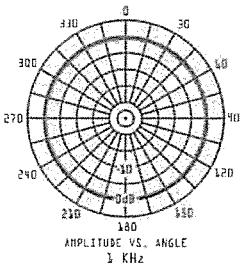

Architects' and Engineers' Specifications

The microphone will be an inconspicuous, omnidirectional, button-style, condenser boundary microphone designed for surface installation. The integrated limiter will maintain near/far signal integrity. The sensitivity of the microphone will be -50dBV (3.2mV) to -10.5dBV (300mV) @ 1 µBar. The frequency response will be 120Hz to 18KHz. The impedance of the microphone will be 50 ohms. The self noise will be 22dBA. The maximum SPL will be 100dB.

The microphone will include an integral 150Hz, 6dB/oct high-pass filter to improve intelligibility. The microphone will have a removable 3.5mm terminal block plug with 180 degree wire-to-plug orientation, accepting 30 to 14AWG size wire.

The microphone will be externally powered with an 8 to 18VDC 70mA source (not supplied). The microphone element and electronics will be enclosed in a radio frequency resistant housing meeting or exceeding EN55103-2. The microphone will be 3-3/8" [85mm] long, 1-1/8" [28mm] in diameter and stand 3/4" [20mm] above boundary. The net weight [mass] will be 2.4oz [.07Kg]. The packaged weight [mass] will be 5.4oz [0.15Kg]. The microphone will have durable matte-white urethane finish.

The Astatic model 210 is specified.

Two-Year Limited Warranty

CAD Audio hereby warrants that this product will be free of defects in material and workmanship for a period of two years from the date of purchase. In the unlikely event that a defect occurs CAD Audio will, at its option, either repair or replace with a new unit of equal or greater value. Retain proof of purchase to validate the purchase date and return it with any warranty claim.

This warranty excludes exterior finish or appearance, damage from abuse, misuse of the product, use contrary to CAD Audio's instructions or unauthorized repair. All implied warranties, merchantability, or fitness for a particular purpose is hereby disclaimed and CAD Audio hereby disclaims liability for incidental, special or consequential damages resulting from the use or unavailability of this product.

This warranty gives you specific legal rights and you may have other rights that vary from state to state. Some states do not allow the exclusion or limitation of incidental or consequential damages or limitations on how long an implied warranty lasts, so the above exclusions and limitations may not apply to you.

Note: No other warranty, written or oral is authorized by CAD Audio.

Shipping Instructions

Please call our customer service department at 440-349-4900 for a pre-approved return authorization number.

Carefully repack the unit and return the insured package to: CAD Audio, 6573 Cochran Road, Building I, Solon, Ohio 44139.
RETURNS WITHOUT A PRE-APPROVED RETURN AUTHORIZATION NUMBER WILL BE REFUSED.

If outside the United States, contact your local dealer or distributor for warranty details.

©2010 CAD Audio
Part No. 46873-95-01 Jan2010

ASTATIC COMMERCIAL

CAD Audio
6573 Cochran Rd. Building I
Solon, Ohio 44139 U.S.A.
Tel: (440) 349-4900 Fax: (440) 248-4902
Sales: (800) 762-9266
www.cadaudio.com

Back to Agenda

INTELLINET
NETWORK SOLUTIONS

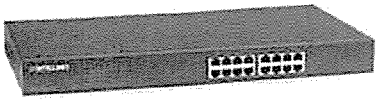

16-Port Fast Ethernet Rackmount PoE Switch

16 x 15.4 Watts PoE ports, Class 3 IEEE 802.3af compliant, Endspan, 19" Rackmount
Part No.: 503631

Deliver Power over Ethernet to remote devices.

The INTELLINET NETWORK SOLUTIONS PoE Office Switch is equipped with 16 10/100Base-TX Fast Ethernet ports, all of which support 802.3af Power over Ethernet (PoE). Besides being a versatile network LAN switch, it also provides a Power over Ethernet option that supplies power injection into 802.3af-compliant devices, such as IP phones, wireless access points and network cameras.

Power over Ethernet 802.3af, Class 3

The PoE Office Switch has 16 10/100Base-TX ports that support the 802.3af protocol and is designed to inject up to 15.4 Watts per port. Any device that is 802.3af compliant can be attached to the switch, and no additional power will be required to support the attached device. This eliminates the time and expense of electrical power rewiring, and minimizes the clutter of power supplies and adapters in awkward places such as ceilings and walls. The Class 3 design of this switch ensures that the full power of 15.4 Watts is available on all 16 ports simultaneously. PoE without compromises!

Optimum Performance

Besides providing 802.3af Power over Ethernet functionality, the PoE Office Switch has some very impressive features as a switch. For starters, the auto features of this switch make installation Plug and Play and hassle free. No configuration is required. Auto-MDI/MDI-X crossover on all ports eliminates the need for crossover cables for connection to another switch or hub. Auto-negotiation on each port senses the link speed of a network device (either 10 or 100) and intelligently adjusts for compatibility and optimal performance.

* Contact your INTELLINET NETWORK SOLUTIONS reseller for ordering information

Features:

- 10/100 auto-sensing ports automatically detect optimal network speeds
- All RJ-45 ports with Auto-MDIX and NWay auto-negotiation support
- IEEE 802.3af-compliant RJ-45 PSE/PoE output ports
- Full-power Class 3 PoE design
- Power output up to 15.4 Watts per port
- Store and forward switching architecture
- Full/half duplex operation
- Supports 4096 MAC address entries
- 200 kBytes buffer memory
- 19 in. rackmount metal case
- LEDs for power, link/activity and PoE
- Three-Year Warranty

Specifications:

Standards
- IEEE 802.3 (10Base-T Ethernet)
- IEEE 802.3u (100Base-TX Fast Ethernet)
- IEEE 802.3x (flow control, full duplex mode)
- IEEE 802.3af (Power over Ethernet)

General
- Media support:
- 10Base-T Cat3, 4, 5 UTP/STP RJ-45
- 100Base-TX Cat5 UTP/STP RJ-45
- Ports: 16 RJ-45 10/100 Mbps PoE ports
- Packet filter/forwarding rate:
- 148,800 pps (100 Mbps)
- 14,880 pps (10 Mbps)
- Certifications: FCC Class A, CE Mark

www.intellinet-network.com

For more information on INTELLINET products, consult your local dealer or visit www.intellinet-network.com.
All names of products or services mentioned herein are trademarks or registered trademarks of their respective owners. Distribution, reproduction of this document, and use and disclosure of the contents herein, are prohibited unless specifically authorized.

Back to Agenda

INTELLINET
NETWORK SOLUTIONS

LEDs
- Power
- Link/activity for 10 and 100 Mbps
- PoE

Power
- Input: 90 – 260 V AC, 50 – 60 Hz
- Power consumption: 250 Watts (maximum)

Environmental
- Metal housing, 19 in., 1 u
- Dimensions: 440 (W) x 220 (L) x 44 (H) mm (17.3 x 8.6 x 1.7 in.)
- Weight: 3.8 kg (8.4 lbs.)
- Operating temperature: 0 – 60°C (32 – 140°F)
- Operating humidity: 10 – 90% RH, non-condensing
- Storage temperature: -20 – 90°C (-4 – 194°F)

Package Contents
- 16-Port Fast Ethernet Rackmount PoE Switch
- Power cable
- User manual

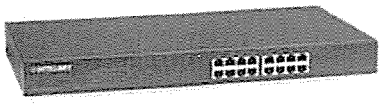

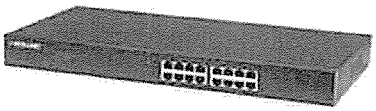

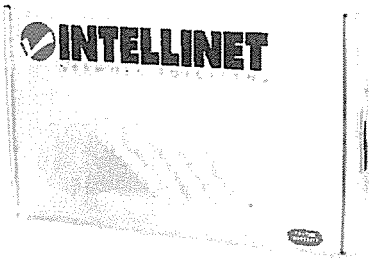

www.intellinet-network.com

For more information on INTELLINET products, consult your local dealer or visit www.intellinet-network.com.
All names of products or services mentioned herein are trademarks or registered trademarks of their respective owners. Distribution and reproduction of this document, and use and disclosure of the contents herein are prohibited unless specifically authorized.

Back to Agenda

Panasonic

HD Vandal Resistant Fixed Dome Network Camera
WV-SF346
Vandal Resistant Fixed Dome Network Camera
WV-SF342

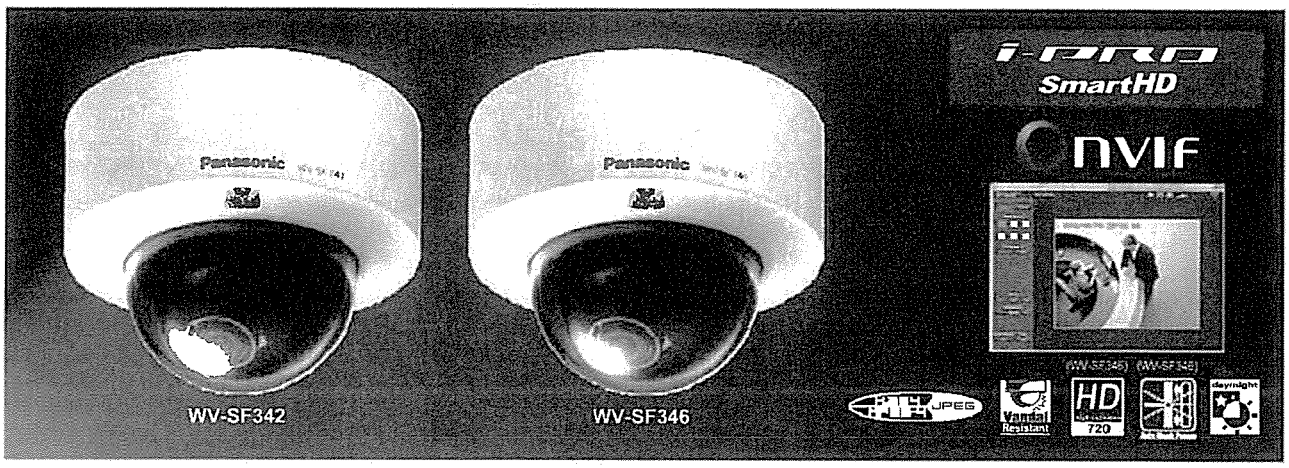

HD / 1,280 x 960 H.264 Vandal Resistant Fixed Dome Network Camera with ABF (Auto Back Focus) (WV-SF346)
SVGA / 800 x 600 H.264 Vandal Resistant Fixed Dome Network Camera (WV-SF342)

Key Features

- 720p HD images up to 30 fps (WV-SF346)
- Newly developed 1.3 Megapixel high sensitivity MOS Sensor (WV-SF346)
- Super high resolution at SVGA/800 x 600 created by newly developed 1.3 Megapixel high sensitivity MOS Sensor (WV-SF342)
- Multiple H.264 (High profile) streams and JPEG streams ensure simultaneous real time monitoring and high resolution recording by "UniPhier®", Panasonic's proprietary System LSI platform.
- Full frame (Up to 30 fps) transmission at 1,280 x 960 image size (WV-SF346)
- Full frame (Up to 30 fps) transmission at SVGA/800 x 600 image size (WV-SF342)
- Wide Dynamic Range and ABS (Adaptive Black Stretch) technologies deliver wider dynamic range compared with conventional cameras.
- Face Wide Dynamic Range technology ensures clear face image.
- H.264 and MPEG-4 are selectable for system migration.
- High sensitivity with Simple Day/Night function (WV-SF346): 0.3 lx (Color), 0.2 lx (B/W) at F1.3 (Wide)
  High sensitivity with Simple Day/Night function (WV-SF342): 0.2 lx (Color), 0.13 lx (B/W) at F1.3 (Wide)
- ABF (Auto Back Focus) ensures easy installation. (WV-SF346)
- Focus Assist ensures easy installation. (WV-SF342)
- Digital Noise Reduction: 3D-DNR ensures noise reduction in various conditions.
- Progressive scan ensures clear images with less motion blur and no tearing even when the subject is moving.
- Superior color reproduction by primary (RGB) color filter
- Electronic sensitivity enhancement: Auto (Up to 16x) / OFF
- Selectable light control modes: Outdoor / Indoor / Fixed electronic shutter
  Outdoor / Indoor: Electronic shutter and ALC lens iris control are automatically controlled depending on the mode and luminance level.
  Fixed electronic shutter: Up to 1/10,000 fixed electronic shutter can be selectable.
- VMD (Video Motion Detector) with 4 programmable detection areas, 15 steps sensitivity level and 10 steps detection size
- Privacy Zone can mask up to 2 private areas, such as house windows and entrances/exits.
- 2x, 4x digital zoom controlled by browser
- Alarm sources including 1 terminal input, VMD and Panasonic alarm command can trigger actions such as SDHC/SD memory recording, FTP image transfer, E-mail notification, Indication on browser, Alarm terminal output, and Panasonic protocol output.
- Full duplex bi-directional audio allows interactive communication between camera site and monitoring site.
- JPEG image compression ratio can be changed by alarm so that higher quality image can be provided.
- Prioritized stream control: One of the video streams can be prioritized when multiple recorders or client PCs are accessing the camera so that the recorder or the client PC can maintain the frame rate.
- SDHC/SD Memory card slot for manual recording (H.264 / JPEG), alarm recording (H.264 / JPEG) and backup upon network failure (JPEG)
- H.264/MPEG-4 max. bit rate/client and Total bit rate control allows flexible network traffic management. Frame rate priority mode controls bit rate and compression ratio to provide the specified frame rate.
- Alarm log, Manual REC log, FTP error log saved in the SDHC/SD memory card is displayed on the browser GUI and can be downloaded to the client PC. Playback or Image data download through the log is also available.
- Internet mode: H.264/MPEG-4 images can be transmitted over HTTP protocol.
- Multi-language GUI and setup menu: English, French, Italian, Spanish, German, Russian (PAL) / English, French (NTSC) *Installation required except for English
- IPv4/IPv6 protocol supported
- Analog Monitor output for easier installation
- 2.8 mm ~ 10 mm, 3.6x Varifocal Auto Iris lens
- ONVIF compliant model
- Fog compensation

Standard Accessories

• CD-ROM*1	1 pc.	• Cable Tie	2 pcs. (incl. 1 spare)
• Installation Guide	1 pc.	• Bit for Tamperproof Screw	1 pc.
• Code Label*2	1 pc.	• Focus Adjustment Jig (SF342 only)	1 pc.
The followings are for installation			
• Power Cord Plug	1 pc		
• External I/O Terminal Plug	1 pc.		
• Installation Template Label	1 pc		

*1 The CD-ROM contains the operating instructions (PDFs) and different kinds of tool software programs
*2 This label may be required for network management. The network administrator shall retain the code label

Optional Accessories

Ceiling Mount Bracket
WV-Q105

Back to Agenda

Specifications

TV System		NTSC	PAL
Camera	Image Sensor	1/3 type MOS Sensor	
	Effective Pixels	Approx. 1.3 megapixel	
	Scanning Mode	Progressive scan	
	Scanning Area	4.8 mm (H) x 3.6 mm (V)	
	Minimum Illumination	WV-SF346: Color: 0.3lx, B/W: 0.2lx at F1.3(Shutter: 1/30s, AGC: High), Color: 0.019lx, B/W: 0.013lx at F1.3 (Shutter: 16/30s, AGC: High) WV-SF342: Color: 0.2lx, B/W: 0.13lx at F1.3 (Shutter: 1/30s, AGC: High), Color: 0.013lx, B/W: 0.009lx at F1.3 (Shutter: 16/30s, AGC: High)	
	White Balance	AWC(2,000~10,000K), ATW1(2,700~6,000K), ATW2(2,000~6,000K)	
	Light Control Mode	Outdoor: Automatic integration of ALC and ELC Indoor [50 Hz]: Automatic integration of ALC and ELC (up to 1/100 s) Indoor [60 Hz]: Automatic integration of ALC and ELC (up to 1/120 s)	
	Shutter Speed	Fix shutter: OFF (1/30), 3/100, 3/120, 2/100, 2/120, 1/100, 1/120, 1/250, 1/500, 1/1,000, 1/2,000, 1/4,000, 1/10,000	
	Wide Dynamic Range	ON / OFF	
	Face Wide Dynamic Range	ON / OFF (Only at Wide Dynamic Range: ON)	
	Adaptive Black Stretch	ON / OFF (Only at Wide Dynamic Range: OFF)	
	AGC	ON (LOW, MID, HIGH) / OFF	
	Electronic Sensitivity UP	OFF / AUTO (Max: 2x(2/30 s), 4x(4/30 s), 6x(6/30 s), 10x(10/30 s), 16x(16/30 s))	
	Simple Day/Night Mode	AUTO / OFF	
	Digital Noise Reduction	High / Low	
	Video Motion Detection	4 areas, Sensitivity: 15 steps, Detection size: 10 steps	
	Privacy Zone	Up to 2 zones, Gray	
	Camera Title (OSD)	Up to 16 alphanumeric characters	
	Focus Adjustment	WV-SF346: ABF/MANUAL, WV-SF342: Focus Assist	
Lens	Vari Focal Length	2.8 mm ~ 10 mm, 3.6x varifocal	
	Angular Field of View	H: 27.7° (Tele) ~ 100.3° (Wide), V: 20.8° (Tele) ~ 73.5° (Wide)	
	Maximum Aperture Ratio	1 : 1.3 (Wide) ~ 1 : 3.1 (Tele)	
	Focusing Range	0.3 m ~ ∞	
Adjusting Angle		Horizontal: 180° (clockwise), 170° (counter clockwise) Vertical: ±75°, Imaging tilt adjustment range: ±100°	
Browser GUI	Camera Control	Brightness, AUX ON / OFF	
	Display Mode	Spot, Quad: Image from 16 cameras can be displayed in 4 different Quad screens or 16 split screen (JPEG only). 20 characters camera title available	
	Digital Zoom	1x, 2x, 4x controlled by browser GUI	
	Camera Title	Up to 20 alphanumeric characters	
	Clock Display	Time: 12H/24H, Date: 5 formats on the browser, Summer time (Manual)	
	Alarm Control	Reset	
	One Shot Capture	A still picture will be displayed on a newly opened window.	
	Audio	Mic(Line) Input: ON/OFF Volume adjustment: Low/Middle/High, Audio Output: ON / OFF Volume adjustment: Low / Middle / High	
	SD Memory Data Download	Still or motion images recorded in the SDHC/SD memory card can be downloaded.	
	GUI/Setup Menu Language	English, French (Installation required for French)	English, French, Italian, Spanish, German, Russian (Installation required except for English)
	System Log	Up to 100 (Internal), Up to 4,000 (SDHC/SD memory when the recording format is set to JPEG.) error logs	
	Supported OS	Microsoft® Windows® 8, Microsoft® Windows® 7, Microsoft® Windows Vista®, Microsoft® Windows® XP SP3	
	Supported Browser	Windows® Internet Explorer® 10.0 (32 bit), Windows® Internet Explorer® 9.0 (32 bit), Windows® Internet Explorer® 8.0 (32 bit), Windows® Internet Explorer® 7.0 (32 bit), Microsoft® Internet Explorer® 6.0 SP3	
Network	Network IF	10Base-T / 100Base-TX, RJ-45 connector	
	Image Resolution *1 *2 — Aspect ratio: [4 : 3]	WV-SF346: H.264: 1,280 × 960 / VGA (640 × 480) / QVGA (320 × 240), up to 30 fps MPEG-4: VGA (640 × 480) / QVGA (320 × 240), up to 30 fps JPEG: 1,280 × 960 / VGA (640 × 480) / QVGA (320 × 240), up to 30 fps WV-SF342: H.264: 800 × 600 / VGA (640 × 480) / QVGA (320 × 240), up to 30 fps MPEG-4: VGA (640 × 480) / QVGA (320 × 240), up to 30 fps JPEG: 800 × 600 / VGA (640 × 480) / QVGA (320 × 240), up to 30 fps	
	Aspect ratio [16 : 9]	WV-SF346: H.264: 1,280 × 720 / 640 × 360 / 320 × 180, up to 30 fps JPEG: 1,280 × 720 / 640 × 360 / 320 × 180, up to 30 fps WV-SF342: H.264: 640 × 360 / 320 × 180, up to 30 fps JPEG: 640 × 360 / 320 × 180, up to 30 fps	
	H.264/ MPEG-4 *1 — Transmission priority	Constant bitrate / Framerate / Best effort / Advanced VBR	
	Frame Rate	1/3/5/7.5/10/15/20/30 fps	1/3/5/7.5/10/12/15/20/30 fps
	Bit Rate/ Client	64 / 128 / 256 / 384 / 512 / 768 / 1,024 / 1,536 / 2,048 / 3,072 / 4,096 / 6,192* kbps / Unlimited * H.264 mode only	
	Image Quality	LOW / NORMAL / FINE	
	Refresh Interval	0.2 s / 0.33 s / 0.5 s / 1 s / 2 s / 3 s / 4 s / 5 s	
	Transmission Type	UNICAST / MULTICAST	
	JPEG — Image Quality	10 steps	
	Transmission Type	PULL / PUSH	
	Audio Compression	G.726 (ADPCM) 32 kbps / 16 kbps	
	Audio Mode	OFF / Mic (Line) input / Audio output / Interactive (Half duplex) / Interactive (Full duplex)	
	Authentication for Audio	Level 1 only / Level 2 higher / All users	
	Total Bit Rate	64 / 128 / 256 / 384 / 512 / 768 / 1,024 / 2,048 / 4,096 / 8,192 kbps / Unlimited	

TV System		NTSC	PAL
Network	Supported Protocol	IPv6: TCP/IP, UDP/IP, HTTP, RTP, FTP, SMTP, DNS, NTP, SNMP IPv4: TCP/IP, UDP/IP, HTTP, RTSP, RTP, RTP/RTCP, FTP, SMTP, DHCP, DNS, DDNS, NTP, SNMP	
	FTP Client	Alarm image transfer, Periodic image transfer, Active/Passive selectable (When the FTP periodic transmission is failed, backup on an optional SDHC/SD memory card is available.)	
	No. of Simultaneous Users	Up to 14 users (Depends on network conditions)	
	SDHC/SD Memory Card (Option)	H.264 recording: Manual REC / Alarm REC (Pre/Post) JPEG recording: Manual REC / Alarm REC (Post) / Backup upon network failure. Compatible SD (SDHC) card: Panasonic 256 MB, 512 MB, 1 GB, 2 GB, 4 GB*, 8 GB*, 16 GB*, 32 GB* model / *SDHC card	
Alarm	Alarm Source	1 terminal input, VMD, Command alarm	
	Alarm Actions	SDHC/SD memory recording, E-mail notification, Alarm terminal output, Indication on browser, FTP image transfer, Panasonic protocol output	
	Alarm Log	With SDHC/SD memory card: 5,000 logs, without SDHC/SD memory card: 1,000 logs	
	Schedule	Alarm / VMD / Access permission	
Input/ Output	Monitor Output (for adjustment)	1.0 V [p-p] / 75 Ω, NTSC composite, RCA Jack	1.0 V [p-p] / 75 Ω, PAL composite, RCA Jack
	Microphone/Line Input	MIC IN and Line IN are selectable: ø3.5 mm stereo mini jack (monaural input) (Applicable microphone: Plug-in power type) Supply voltage: 2.5 V ±0.5 V, input impedance: approx. 2 kΩ	
	Audio Output	ø3.5 mm stereo mini jack (monaural output) Line level	
	External I/O Terminals	ALARM IN, ALARM OUT, AUX OUT	
General	Safety/EMC Standard	UL (UL60065), FCC (Part15 ClassA), C-UL (CAN/CSA C22.2 No.60065), DOC (ICES003 ClassA)	CE (EN55022 ClassB, EN55024)
	Power Source and Power Consumption	12 V DC 320 mA, PoE (IEEE 802.3af) 4.2 W (Class 2 device)	
	Ambient Operating Temperature/Humidity	-10 °C ~ +50 °C (14 °F ~ 122 °F), 90 % or less (without condensation)	
	Impact Protection	IEC 60068-2-75 test Eh, 20J / IEC 62262 IK10	
	Dimensions	ø129.5 mm x 102.5 mm (H) (ø5-1/8" x 4" (H))	
	Mass (approx.)	WV-SF346: 650 g (1.43 lbs.) / WV-SF342: 610 g (1.35 lbs.)	

*1 H.264 and MPEG-4 are alternative. *2 [4 : 3] and [16 : 9] are alternative.

Part Names and Functions

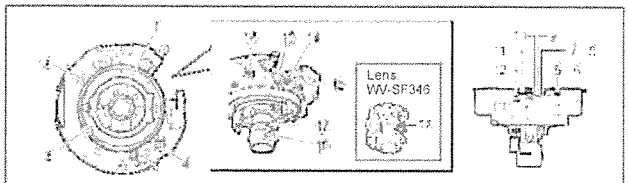

1. Azimuth Adjustment Ring
2. Monitor Out Connector for Adjustment
3. Panning Lock Screw
4. 12 V DC Power Supply Terminal
5. Focus Assist (F.A.) Button (WV-SF342)
6. Auto Focus (AF) Button (WV-SF346)
7. SDHC/SD Memory Card Error Indicator / F.A. Indicator (WV-SF342)
8. SDHC/SD Memory Card Error Indicator / AF Indicator (WV-SF346)
9. Link Indicator
10. Access Indicator
11. SDHC/SD Memory Card Slot
12. INITIAL SET Button
13. Audio Output Connector
14. Microphone / Line Input Connector
15. Network Connector
16. External I/O Terminals
17. Zoom Lock Knob
18. Focus Lock Knob (WV-SF342)

Appearance

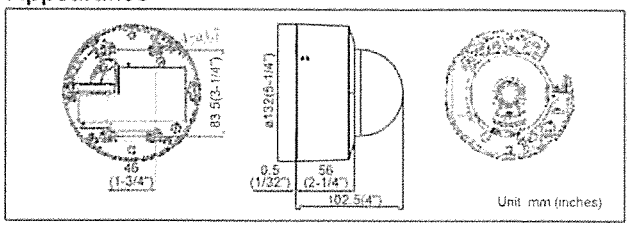

Trademarks and registered trademarks
- Microsoft, and Windows are registered trademarks of Microsoft Corporation in the U.S. and other countries
- UniPhier is a registered trademark of Panasonic Corporation
- "i-PRO SmartHD" logo is trademarks or registered trademarks of Panasonic Corporation
- ONVIF and the ONVIF logo are trademarks of ONVIF Inc.

Important
- Safety Precaution: Carefully read the operating instructions and installation manual before using this product.
- Panasonic cannot be responsible for the performance of the network and/or other manufacturers' products used on the network.

- All TV pictures are simulated
- Masses and dimensions are approximate
- Specifications are subject to change without notice
- These products may be subject to export control regulations
- All product pictures are NTSC models

DISTRIBUTED BY:

Panasonic

http://security.panasonic.com
http://www.facebook.com/PanasonicNetworkCamera

Printed in Japan (23-068D)

Back to Agenda

Arecont Vision®

Leading the Way in Megapixel Video™

SurroundVideo®

H.264 All-in-One 180° and 360° Panoramic Day/Night Indoor/Outdoor Dome IP Cameras

Camera Models

8MP Panoramic 180°	8MP Panoramic 360°	20MP Panoramic 180°	20MP Panoramic 360°	40MP Panoramic 180°
AV8185CO	AV8365CO	AV20185CO	AV20365CO	AV40185DN
AV8185CO-HB	AV8365CO-HB	AV20185CO-HB	AV 20365CO-HB	AV40185DN-HB
AV8185DN	AV8365DN	AV20185DN	AV20365DN	
AV8185DN-HB	AV8365DN-HB	AV20185DN-HB	AV20365DN-HB	

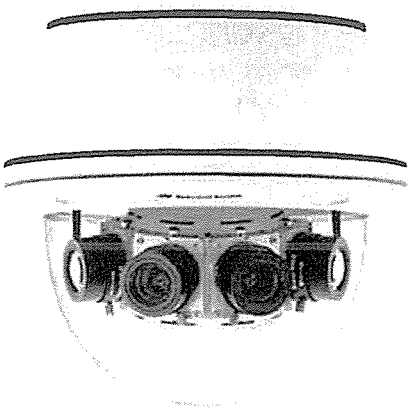

180° Panoramic

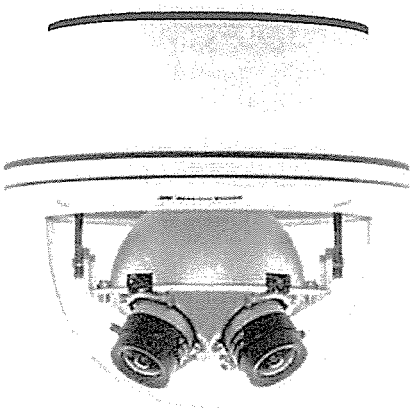

360° Panoramic

SurroundVideo® panoramic view megapixel IP cameras provide all-in-one solutions for wide area video surveillance. Four sensors and lenses are housed in an outdoor-rated IP66 and IK-10 impact-resistant dome enclosure. The cameras are available in 180° and 360° configurations and resolutions of 8-, 20- and 40-megapixels (MP). A single SurroundVideo® panoramic camera can replace multiple conventional cameras with the ability to zoom into multiple regions of interest. Their return on investment is easily measured any way you view it.

180° Panoramic at 8, 20 and 40MP

360° Panoramic at 8 and 20MP

True Day/Night with IR Cut Filter

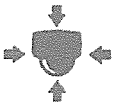

All-in-One Dome Solution with Integrated Lens

Impact / Weather Resistant IK-10 and IP66 Rated

Pixel Binning Mode on 20 and 40MP Models

Heater/Blower Option

Dual Encoder H.264/MJPEG

Features:

- Industry's First 8MP, 20MP and 40MP Panoramic Megapixel Cameras
- Forensic Zooming – Zoom Live or After the Event While Recording Full Field-of-View in HD – Replace PTZ Devices
- Binning Mode for Strong Low Light Performance in 20MP and 40MP Resolutions
- True Day/Night Functionality with Mechanical IR Cut Filter (DN Models)
- Outdoor Rated IP66 and IK-10 Impact-Resistant Housing
- PoE and Auxiliary Power: 12–48V DC/24V AC
- Easily Adjustable 2-Axis Camera Gimbal with 360° Pan and 90° Tilt
- +/- 5° Electrical Vertical Alignment to Locate Each Sensor Position (180° Series)
- +/- 10° Mechanical Tilt Adjustment to Locate Each Sensor Angle (360° Series)
- Complete Mounting Options
- Dual Encoder H.264/MJPEG
- Privacy Mask, Motion Detection, Flexible Cropping, Bit Rate Control and Multi-Streaming
- Fast Frame Rates
- PSIA Conformant
- Reduced Overall System Cost
- Made in the USA

Model Specific Features

AV8185	8MP	180°	6fps	-
AV8365	8MP	360°	6fps	-
AV20185	20MP	180°	3.5fps	Binning
AV20365	20MP	360°	3.5fps	Binning
AV40185	40MP	180°	1.5fps	Binning

Build-to-Order Options

CO	Color
DN	Day/Night
-HB	Heater and Blower

PSIA

Camera Imaging Specifications

Model		AV8185	AV8365	AV20185	AV20365	AV40185
Image Sensor (CMOS)		8MP = 2MP x 4	8MP = 2MP x 4	20MP = 5MP x 4	20MP = 5MP x 4	40MP = 10MP x 4
H-FOV		180°	360°	180°	360°	180°
Optical Format		1/2"	1/2"	1/2.5"	1/2.5"	1/2.3"
Pixel Pitch		4.2µm	4.2µm	2.2µm	2.2µm	1.67µm
Minimum Illumination	Color	0.1 Lux	0.1 Lux	0.3 Lux	0.3 Lux	0.42 Lux
	Color Binning	-	-	0.15 Lux	0.15 Lux	0.21 Lux
	Day/Night (-DN Version)	0 Lux, IR sensitive	0 Lux, IR sensitive	0 Lux, IR sensitive	0 Lux, IR sensitive	0 Lux, IR sensitive
Full FOV Resolution	Total	6400 H x 1200 V	6400 H x 1200 V	10240 H x 1920 V	10240 H x 1920 V	14592 H x 2752 V
	Per Sensor	1600 H x 1200 V	1600 H x 1200 V	2560 H x 1920 V	2560 H x 1920 V	3648 H x 2752 V
1/4 Resolution	Total	3200 H x 600 V	3200 H x 600 V	5120 H x 960 V	5120 H x 960 V	7296 H x 1376 V
	Per Sensor	800 H x 600 V	800 H x 600 V	1280 H x 960 V	1280 H x 960 V	1824 H x 1376 V
Dynamic Range		61dB	61dB	70.1dB	70.1dB	57.2dB
Frame Rates	Full Resolution	6fps (6400x1200)	6fps (6400x1200)	3.5fps (10240x1920) 4.2fps (10240x1600)	3.5fps (10240x1920) 4.2fps (10240x1600)	1.5fps (14592x2752)
	1/4 Resolution	20fps (3200x600)	20fps (3200x600)	11fps (5120x960)	11fps (5120x960)	5.5fps (7296x1376)
	Binning Mode	-	-	13fps (5120x960)	13fps (5120x960)	6.5fps (7296x1376)
Lens		CS, F1.8, 7.8mm, IR, H-FOV = 47°	CS, F1.8, 3.5mm, IR, H-FOV = 96°	CS, F1.8, 6.2mm, H-FOV = 47°	CS, F1.8, 3.5mm, H-FOV = 96°	CS, F2.4, 7.2mm, H-FOV = 47°

Data Transmission

Compression Type	H.264 (MPEG-4, Part 10)/Motion JPEG
	21 levels of quality
Network Protocols	RTSP, RTP/TCP, RTP/UDP, HTTP, DHCP, TFTP
Network Interface	100Base-T Ethernet
Multi-Streaming	Non-Identical streams (2 per sensor)

Programmability

On-camera real-time motion detection and privacy mask with up to 1024 detection zones (per sensor)

Privacy mask

Pixel Binning Mode (20 and 40MP)

+/-5° Digital Vertical Alignment to adjust images (180° Model)

Flexible Cropping (resolution windowing down to 1x1 pixel for JPEG and 2x2 pixels for H.264)

Low light noise filter control

Bit rate and bandwidth limitation control

Backlight compensation and auto multi-matrix white balance

50/60Hz selectable flicker control

Electronic pan, tilt, zoom (PTZ) and image flip 180°

Programmable resolution, brightness, saturation, gamma, sharpness, tint

Bandwidth and storage savings by running at 1/4 resolution

Simultaneous delivery of full field-of-view and zoomed images

Programmable shutter speed to help control motion blur

Compliance

Industry Standard	PSIA Conformant
Listings	UL (CB)
FCC Compliance	47 CFR 15 Class A
Environmental	RoHS, REACH, WEEE
Markings	(CE) EN55022 Class A, EN55024, EN61000-3-2, EN61000-3-3, EN60950-1
Mechanical	IK-10 (EN62262), IP66 (EN60529)

Electrical

Input/Output	General purpose opto-coupled	
Power Over Ethernet	PoE 802.3af, Class 3	
Auxiliary Power	12–48V DC, 24V AC	
Power Consumption	AV8185/AV8365	9 Watts DC Power
	AV20185/AV20365	9 Watts DC Power
	AV40185	11.7 Watts DC Power

Heater & Blower Electrical
(-HB only)

Voltage Input	12V to 20V DC/24V AC (separate power required)
Power Output	11W Max (DC 12V); 13W Max (AC 24V)
Heater Switch	On: 17°C (62.6°F), Off: 30°C (86°F)
Blower Switch	On: 10°C (50°F), Off: 15°C (59°F)
	On: 50°C (122°F), Off: 45°C (113°F)

Environmental

Operating temperature	-40°C (-40°F) to +50°C (122°F) w/Heater
Humidity	0% to 90% (non-condensing)
Stable image temperature	0°C (32°F) to +50°C (122°F)
Storage temperature	-30°C (-22°F) to +60°C (140°F)

Mechanical

Casing	Die-cast aluminum chassis with 5.5" (140mm) polycarbonate dome bubble	
	IP66 weather proof standard	
	Impact resistant, IK-10 rated	
Gimbal	Easily adjustable, 2-axis w/360° pan and 90° tilt	
Total Unit Dimensions	Unit	Ø6.9" (175mm) x 6.55" H (166mm)
	Bubble Only	Ø5.5" (140mm) x 3.4" H (87mm)
	Packaged	8.5" (215mm) x 8.5" (215mm) x 8.5" (215mm)
Weight	Unit	3.81 lbs (1.75kg)
	Packaged	4.63 lbs (2.1kg)

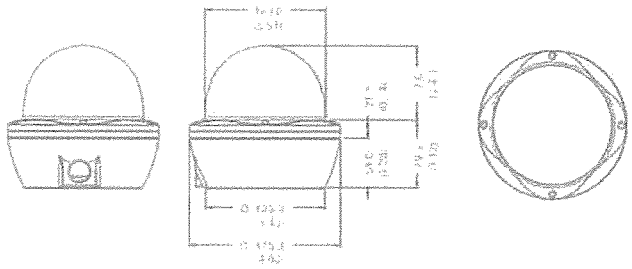

Accessories

MD-PMA	Pole Mount Adapter
MD-CRMA	Corner Mount Adapter
SV-CMT	Ceiling Mount (Fit 1.5" NPT)
SV-EBA	Electrical Box Adapter
SV-FMA	Flush Mount Adapter
SV-JBA	Junction Box Adapter (Fit 3/4" NPT Conduit)
SV-WMT	Wall Mount (Fit 1.5" NPT)

Made in the USA

SV-WMT/SV-CMT

Arecont Vision
megapixel technology...
beyond imagination

Indoor/Outdoor wall mount and pendant mount for AV8185DN and AV8365DN

SV-WMT (Wall Mount) **SV-CMT (Ceiling Mount)**

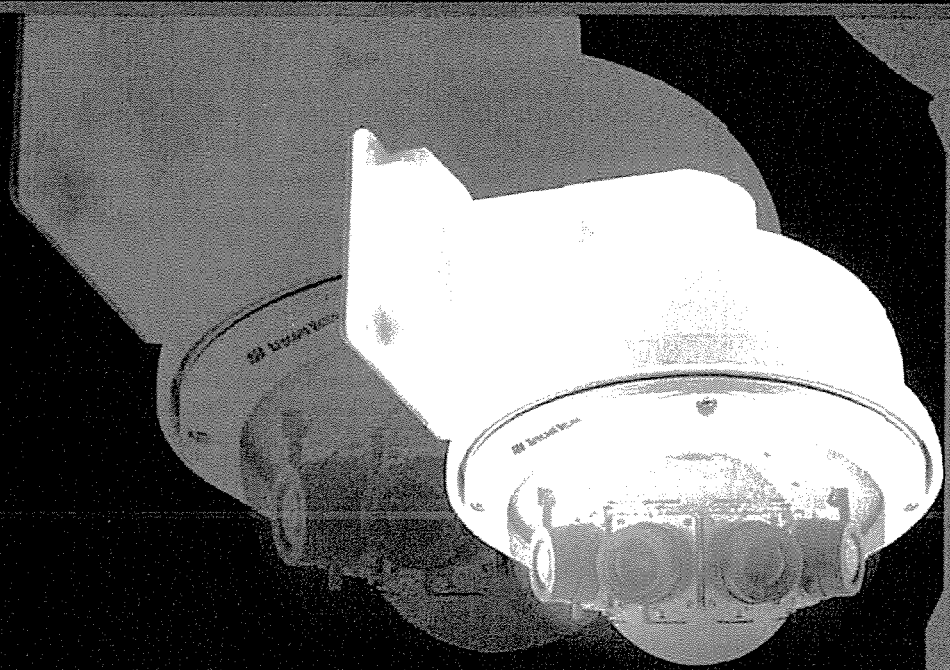

SurroundVideo® Accessories

High quality wall mount and pendant mount accessory designed for AV8185DN and AV8365DN. Combining SV-WMT and SV-CMT accessories with the superior imaging of an AV camera provides the perfect solution for environments in which cameras need to be less noticeable, or require additional protection from the elements.

Arecont Vision Advantages:

Superior Solution for Various Environments
- Indoor or outdoor applications

Excellent Enclosure Protection
- Heavy duty enclosure features an IP66 rating for applications in harsh environments

Easy Installation
- Easy installation and superior design, perfect for indoor or outdoor applications

Full View in All Directions
- Use the AV8185DN or AV8365DN panoramic camera to ensure outstanding observation with excellent color sensitivity and high resolution

Compatibility
- Compatible with 1.5" NPT standard

Vandal Resistant
- Die-cast aluminum, resistant to impact and salt damage

Designed to House: AV8185DN and AV8365DN

Learn more about our products at ***www.arecontvision.com***

www.arecontvision.com avsales@arecontvision.com +1.818.937.0700 877.CAMERA.8

Specifications

SV-WMT/SV-CMT

Indoor/Outdoor wall mount and pendant mount for AV8185DN and AV8365DN

Model Numbers:

SV-WMT (Wall Mount)
SV-CMT (Ceiling Mount)

Mechanical
- Housing material:
  Aluminum
- Color:
  Gray
- Housing Height:
  SV-CMT : 14.4 in (366mm)
  SV-WMT : 5.72 in (145.5 mm)
- Housing Diameter:
  7.4 in (189 mm)
- Weight w/o camera:
  SV-CMT : 3.5 lbs (1.57 kg)
  SV-WMT : 2 lbs (0.9 kg)
- Vandal Resistant

Environmental
- Enclosure Protection:
  IP66 Outdoor Protection Grade

Compatibility
- Compatible with 1.5" NPT standard

Compatible cameras
- AV8185DN and AV8365DN

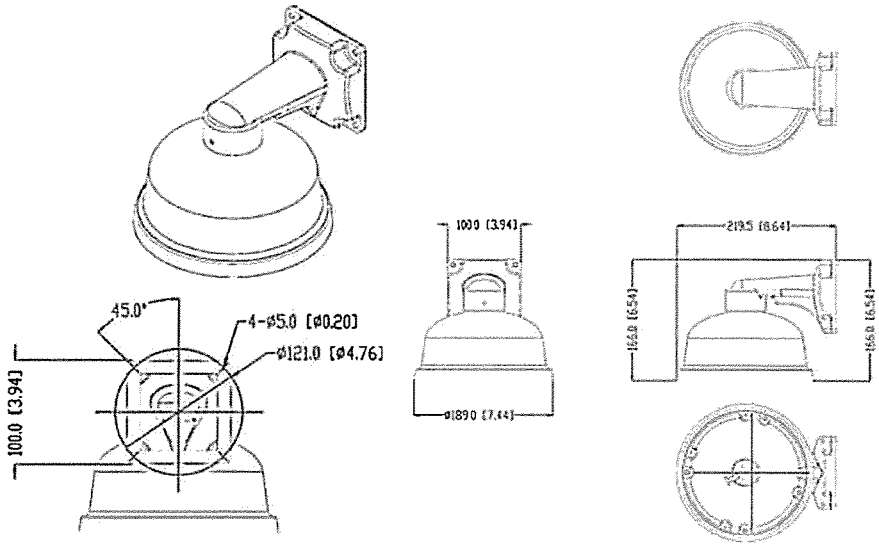

SV-WMT (Wall Mount)

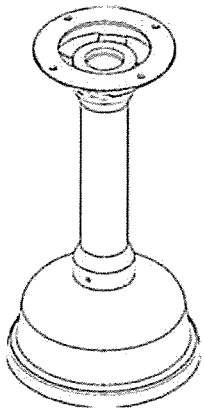

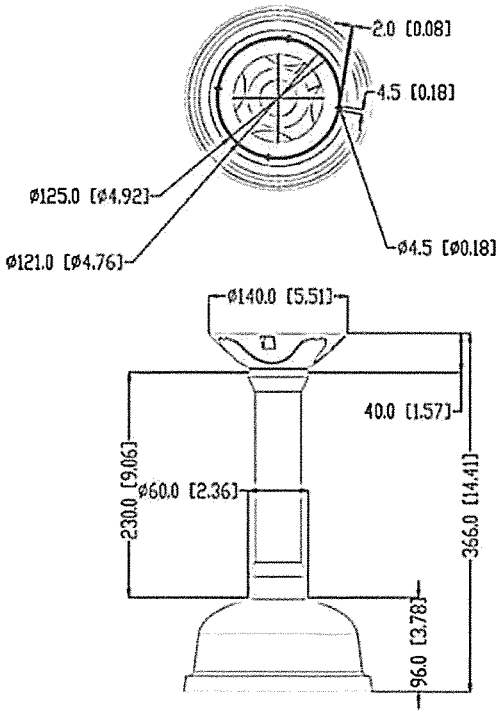

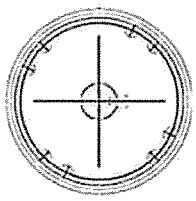

SV-CMT (Ceiling Mount)

Arecont Vision
megapixel technology...
beyond imagination

Made in USA

Revised on 07/15/10

Arecont Vision reserves the right to change products or specifications without notice ©2009 Arecont Vision

exacqVision

Cross Platform IP Video Surveillance Software & Servers

IP Camera NVR Servers - 4U Rackmount

Up to 64 IP Cameras
Up to 16 TB Storage + RAID 5 Option

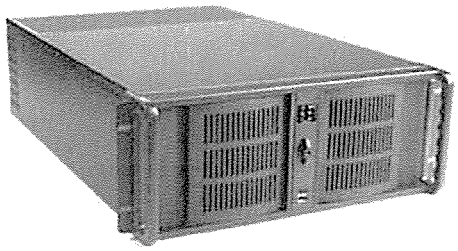

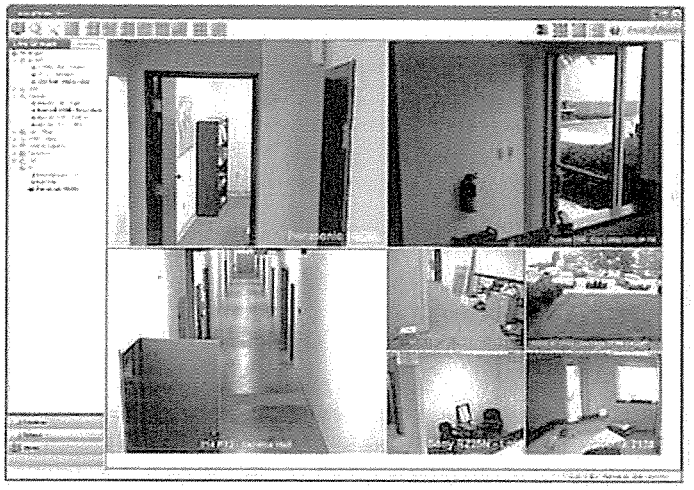

The exacqVision® IP Camera NVR (Network Video Recorder) Server provides complete video management utilizing the latest IP video surveillance cameras on a highly-configurable 4U enterprise-class chassis. The powerful, yet easy-to-operate client user interface installs on any standard computer running Windows, Linux or Mac OS X and connects to multiple exacqVision servers creating a virtually unlimited amount of cameras and protection. Video from all exacqVision systems can also be accessed with web browsers and mobile devices. Each 4U Rackmount IP Camera NVR server can be easily expanded from 1 to up to 64 IP cameras. The RAID 5 option provides additional storage security.

Features — exacqVision 4U Rackmount IP Camera NVR Servers & exacqVision VMS Software

Stand-alone or Enterprise

- Each server expandable from 1 to 64 IP cameras.
- Simple and cost-effective to add additional IP camera licenses.
- Common client simultaneously connects to unlimited exacqVision servers to create scalable network.
- Up to 16TB storage on one server.
- RAID 5 Option (with up to 14TB storage avail.able).

Powerful Integration

- Supports latest IP cameras & encoders including megapixel cameras, H.264 and analytics.
- Integration with leading access control systems.

Intuitive exacqVision Software

- Requires little to no training.
- Multi-monitor client display. Drag and drop cameras between monitors.
- Graphical search display for all cameras and recorded audio.
- Multi-camera playback and support.
- Digital PTZ functionality on all cameras in live and recorded mode.
- Powerful video and audio export features.

Mobile Access

- Access video with web browsers and mobile devices with internet access.

Cross Platform

- Server software runs on Windows or Linux.
- Client software freely available for Windows, Linux and Macintosh.

Mac

IP Camera Integration

ACTi, AXIS, BASLER, Canon, D-Link, Honeywell, image, ipx, Panasonic, SONY, VIVOTEK

Access Control Integration

AMAG, cardax, PCSC, ICT

The Latest Network Camera Integration Partner list with model numbers is available at www.exacq.com/ipcameras.html

05.09

Back to Agenda

Technical Specifications

exacqVision IP Camera NVR Servers - 4U Rackmount

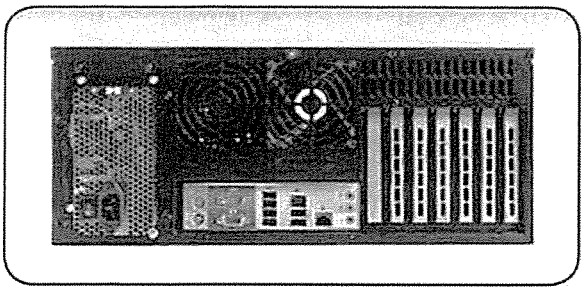

4U Rackmount rear view

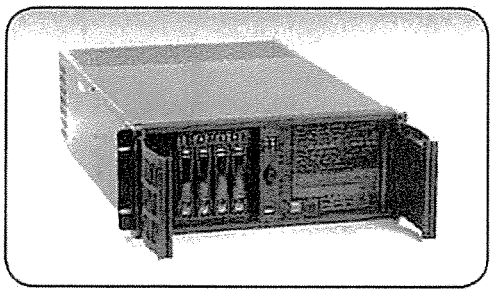

4U Rackmount front with open doors

4U IP Camera Servers - Standard

Model #	IP Licenses	HD Capacity
IPS-8000-R4	Up to 64	8000 GB
IPS-010T-R4	Up to 64	10000 GB
IPS-012T-R4	Up to 64	12000 GB
IPS-014T-R4	Up to 64	14000 GB
IPS-016T-R4	Up to 64	16000 GB

4U IP Camera Servers - with RAID 5

Model #	IP Licenses	HD Capacity
IPS-1500-R4-RAID5	Up to 64	1500 GB / 1000 Usable
IPS-3000-R4-RAID5	Up to 64	3000 GB / 2000 Usable
IPS-4000-R4-RAID5	Up to 64	4000 GB / 3000 Usable
IPS-6000-R4-RAID5	Up to 64	6000 GB / 5000 Usable
IPS-8000-R4-RAID5	Up to 64	8000 GB / 6000 Usable
IPS-010T-R4-RAID5	Up to 64	10000 GB / 8000 Usable
IPS-012T-R4-RAID5	Up to 64	12000 GB / 10000 Usable
IPS-014T-R4-RAID5	Up to 64	14000 GB / 12000 Usable
IPS-016T-R4-RAID5	Up to 64	16000 GB / 14000 Usable

SERVER SPECIFICATIONS

IP CAMERA INPUTS:	Up to 64 per server
RECORDING RESOLUTION:	Up to 5 megapixel (camera dependent)
FRAME RATE:	Camera dependent
COMPRESSION:	H.264, MPEG-4, MJPEG (camera dependent)
SERIAL CONNECTIONS:	1 serial port
NIC:	1Gbit 1000Base T RJ-45 (2nd NIC optional)
USB2 PORTS:	8 (2 front, 6 rear)
HARD DRIVE STORAGE:	Enterprise Class (see model numbers), up to 16 TB standard, RAID5 storage (up to 14 TB available)
VGA OUTPUT:	Dual VGA outputs, 1 DVI-D and 1 VGA (DB15)
KEYBOARD & MOUSE:	Included
DVD/CD RW:	Included (front panel access)
OPERATING SYSTEM:	Windows XP Pro, Windows Server 2003, Linux
COMPATIBLE CLIENT OS:	Windows, Linux, Mac OS X
REGULATORY:	CE (Class A), FCC (Class A)
WARRANTY:	3 years, parts and labor
DIMENSIONS (LxWxH):	4U /28 x 19 x 7 in. / 71.7 x 48.3 x 17.8 cm
WEIGHT:	31.7 - 35.1 lbs. / 13 - 14.6 kg
OPERATING TEMPERATURE:	40 - 95° F / 4.5 - 35° C
RELATIVE HUMIDITY:	5-95% RH (non-condensing)
INPUT VOLTAGE:	120/240 VAC auto-sensing
POWER CONSUMPTION:	<500 watts
VIDEO STANDARD:	NTSC (30 IPS) OR PAL (25 IPS)

CLIENT WORKSTATION - MIN. REQ.

(Full remote operation from most computers)

OS:	Windows, Linux, Mac OS
PROCESSOR:	2 Ghz Celeron (min.)
MEMORY:	512 MB RAM
VGA:	Standard high performance

WEB BROWSER ACCESS

(Access servers from online brower)

COMPATIBILITY:	Windows Explorer Firefox Apple Safari Opera Google Chrome

MOBILE DEVICE ACCESS

(Access video from mobile devices with Internet)

COMPATIBILITY:	iPhone and iPod Touch BlackBerry Windows Mobile OS Most internet ready devices

Back to Agenda

AGENDA ITEM NUMBER: ____

REQUEST FOR ACTION BY BOARD OF SELECTMEN

Date Submitted: 9/17/2014	**Type of Action:**
Date Action Requested: 9/22/2014	☐ **Procedural** ☒ **Formal Action**
Regular X **Work Session** __	☐ **Other:** _____
Subject: DPW Pickup bid award.	

TO: BOARD OF SELECTMEN

FROM: Dean Lessard, Director of Public Works

RECOMMENDATION: The Department recommends that Starkey Ford Inc. be awarded the bid for the new Public Works Pickup Chassis.

PROPOSED MOTION: I move that the Public Works Pickup Chassis bid be awarded to Starkey Ford Inc. in the amount of $35,375.00.

Discussion: The Department solicited bids from five different truck vendors. Two of the five returned bids for a 1 ton pickup truck with snowplow. The following bids were received:

1. Starkey Ford	$35,375
3. Weirs GMC	$35,378

The Weirs GMC bid was for a truck that they have on the lot that does not meet our bid specs. It would cost an additional $4,000 to make it meet most of our bid specs.

FISCAL IMPACT: $35,375

DEPARTMENT LINE ITEM ACCOUNT: 100.0303.9615

BALANCE IN LINE ITEM IF APPROVED: $9,625

Prepared By: Dean Lessard_____ Reviewed By: _____

Back to Agenda

Tel. 207-363-1011
Fax. 207-363-1012
E-mail tdeperrio@yorkmaine.org

Billing: 186 York Street
York, Maine 03909
Shipping: 115 Chases Pond Road
York, Maine 03909

Timothy DePerrio
Town of York
Department of Public Works Foreman

TOWN OF YORK
BID PRICE FORM
NEW 4WD TRUCK

BID SUBMISSION DATE: Thursday September 11, 2014
BID SUBMISSION DEADLINE: 1:30PM
BID OPENING DATE: Thursday September 11, 2014
BID OPENING TIME: Approximately 1:30PM
BID OPEN LOCATION: York Town Hall

Proposer herby offers to provide the equipment described in the applicable specifications.

A. Name of Company submitting proposal: Stackey Ford

Address: PO. Box 37 York, Me 03909

Telephone: 363-2483

B. Provide one (1) new current 4WD Truck as follows:

Manufacturer: Ford

Year /Model: 2015 F350

Back to Agenda

C. Summary of Total Costs to Town of York as Follows:

Total for one (1) New Truck: $ 33535.00

Total price for Plow: $ 5465.00

Total Allowance for Trade-in: $ 3625.00

Total Net Cost to Town (in numerals) $ 35,375.00

Total Net Cost to Town (in words): Thirty Five Thousand Three Hundred Seventy Five.

D. Approximate delivery Date: 10-12 Weeks

E. Name of Company Representative Authorized to Submit Proposals:

Name: Bob Berry

Title: Sales

Date: 9/10/14

Signature:

Return sealed bids to: Town Manager's Office
Town of York
186 York Street
York, Maine 03909

Clearly Mark Envelope: "**Proposal on 4WD Truck**"

Back to Agenda

Tel. 207-363-1011
Fax: 207-363-1012
E-mail: tdeperrio@yorkmaine.org

Billing: 186 York Street
York, Maine 03909
Shipping: 115 Chases Pond Road
York, Maine 03909

Timothy DePerrio
Town of York
Department of Public Works Foreman

TOWN OF YORK
BID PRICE FORM
NEW 4WD TRUCK

BID SUBMISSION DATE: Thursday September 11, 2014
BID SUBMISSION DEADLINE: 1:30PM
BID OPENING DATE: Thursday September 11, 2014
BID OPENING TIME: Approximately 1:30PM
BID OPEN LOCATION: York Town Hall

Proposer herby offers to provide the equipment described in the applicable specifications.

A. Name of Company submitting proposal: Weirs Buick GMC Inc

Address: 1513 Portland Rd US RTE 1 Arundel Me 04046

Telephone: 207-604-7223 Mark Gonneville.

B. Provide one (1) new current 4WD Truck as follows:

Manufacturer: GMC

Year /Model: 2015 Sierra 3500 HD Crew Cab long Box.

Back to Agenda

C. Summary of Total Costs to Town of York as Follows:

Total for one (1) New Truck: $ 32,153.00 add + 3500 Painted Blue

Total price for Plow: $ 5,225.00

Total Allowance for Trade-in: $ -2,000.00

Total Net Cost to Town (in numerals) $ 35,378.00 + 3500 add Painted Blue

Total Net Cost to Town (in words): Thirty Five Thousand Three hundred Seventy Eight.

D. Approximate delivery Date: ASAP Truck In Stock.

E. Name of Company Representative Authorized to Submit Proposals:

Name: Mark R Gonneville

Title: Commercial Sales

Date: 9-11-2014

Signature:

Return sealed bids to: Town Manager's Office
Town of York
186 York Street
York, Maine 03909

Clearly Mark Envelope: "**Proposal on 4WD Truck**"

Back to Agenda

Ronald J. McAllister
188 Woodbridge Road
York, Maine 03909-1423

E-mail: ronmcallister150@gmail.com Telephone: 207-363-1134

TO: Members of the Town of York Board of Selectmen

FROM: Ron McAllister, Chair of the York Village Study Committee

VIA: Steve Burns, Interim Town Manager

DATE: 18 September 2014

RE: Village Master Plan Phase I: Progress Report #1

At its August 11 meeting, the Board of Selectmen authorized the Village Study Committee to begin working with The Downtown Revitalization Collaborative (TDRC) to develop a Master Plan for York Village. The purpose of this memo is to update the Board on what has happened since that decision was made. Below is a bulleted list of progress made in pursuit of the Master Plan.

- **Joint Meetings:** Three meetings have been held between the VSC and TDRC (August 21, September 4 and September 18) to begin implementation of the plan. There also have been additional conferences by telephone and in person with Denis Lachman, TDRC's project manager.

- **Planning Board:** A working meeting with the Planning Board took place on August 28 so we could begin discussing possible zoning changes which would facilitate the goals of village revitalization. A zoning sub-committee has been created within the VSC to interface with the Planning Board.

- **Communications:** Another sub-committees have been established in the areas of communications (BuzzComm). BuzzComm is developing a logo and slogan for all communications and marketing purposes. A table has been reserved at MarketFest (October 17 and 18) in an attempt to enhance communication with the public on the Village Master Plan

- **Economic Development:** We are working to organize a sub-committee addressing economic development issues.

- **Event #1:** We have scheduled and are promoting Event #1 on October 4 (9:00 - Noon at the public library) to bring the public back into the design process for the entire 5-minute village. A facilitator training session has been scheduled for the October 4 small group discussions. Event #2 is

Back to Agenda

tentatively scheduled for Wednesday evening November 12. We hope members of the Board will be available to participate in these events.

- **Local Business Outreach:** One-on-one meetings between village business leaders and TDRC's economist, Rodney Lynch, are being scheduled. These appointments will take place on October 15 and 16.

- **The Base Survey:** Print versions of the base survey were recently received from LinePro. A sub-committee reviewed LinePro's report for accuracy and completeness. We are still awaiting an electronic version of the survey. I should note that there have been many delays in the delivery of the civil engineering survey. We hope these delays will not impact the timely completion of TDRC's work.

- **Traffic and Parking Studies:** A *draft* report from TDRC's traffic engineer (John Adams) has been shared with the VSC. Adams' report provides data from observations of vehicular, pedestrian and bicycle traffic during peak hours (weekday and weekend) as well as a three year accident history within the 2-minute village. The report also includes an inventory of parking spaces and parking space utilization rates. These data will lead to an animated traffic model. The traffic and parking studies are part of the technical investigation promised in TDRC's proposal.

It is the plan of the VSC to supply its next progress report for the Board's November 10 meeting. Thank you for your continuing support.

cc: Village Study Committee
Denis Lachman, TDRC

Back to Agenda

Notice of Public Hearing
Board of Selectmen
Monday, September 22
7:00 PM
York Public Library

The York Board of Selectmen will conduct a Public Hearing on **Monday, September 22, 2014** at **7:00PM** regarding the possible action on a **request to vacate a portion of a right-of-way on Pinecrest Drive**. For more information please contact the Town Manager's Office (207) 363-1000.

Back to Agenda

AGENDA ITEM NUMBER: ____

REQUEST FOR ACTION BY BOARD OF SELECTMEN

Date Submitted: September 19, 2014	**Type of Action:**
Date Action Requested: September 22, 2014	☐ **Procedural** ☒ **Formal Action**
Regular X **Work Session** __	☐ **Other:** _____
Subject: Business License Applications (2)	

TO: BOARD OF SELECTMEN

FROM: Melissa M. Avery; Assistant to the Town Manager

RECOMMENDATION:

PROPOSED MOTION: I move to approve the following licenses:

1. John and Nancy Stern DBA: Pie In The Sky Bakery (Food Service); Located at 1 River Road
2. John Shaw DBA: Frankie and Johnny's (Food Service); Located at 1594 US Route One

… subject to taxes, fees and inspections being current and compliant with the usual noise stipulations

Discussion: All appropriate Departments have given approval; See "Department Approvals" on page 2 of Applications.

FISCAL IMPACT: N/A

Back to Agenda

DEPARTMENT LINE ITEM ACCOUNT: N/A
BALANCE IN LINE ITEM IF APPROVED: N/A

Prepared By: Melina M Arenas Reviewed By: _____

Back to Agenda

THE TOWN OF

YORK, MAINE

186 York Street, York, Maine 03909

BUSINESS LICENSE APPLICATION

NOTE: Business Licenses are not transferable to another person, business or location.

Business Name: PIE IN THE SKY BAKERY, INC.

Street Address: 1 RIVER ROAD, CAPE NEDDICK, ME 03902-7203

Business Owner: JOHN & NANCY STERN Business Manager: NANCY STERN

Mailing Address: SAME Mailing Address: SAME

Phone Number: 207-363-2656 Phone Number: 207-363-2656

E-mail Address: PIENSKY@MAINE.RR.COM E-mail Address: SAME

Please indicate who is to be the Primary Contact with the Town: ☒ OWNER or ☐ MANAGER

Is the Business Owner same as the prior year? ☒ YES ☐ NO

Please indicate which Licenses or Local Approvals you seek:

Lodging:

___ Bed and Breakfast License (C/F)
___ Innkeeper License (C/F)
Number of Rooms: ____

Food and Beverage:

X Food Service License (C/F)
___ Liquor License (F/P)
___ Bottle Club License (F/P)
Number of Seats: ____

Entertainment:

___ Special Amusement License (F/P)
___ Dance Hall License (F/P)
___ Bowling Alley License (F)
___ Coin-Operated Amusement License (P)
___ Bingo, Beano and Games of Chance

Miscellaneous:

___ Transient Seller's License
___ Flea Market License
___ Junkyard, Auto Graveyard/Recycling License
___ Other: _____

C – Code Enforcement Inspection Required F – Fire Department Inspection Required P – Police Department Inspection Required

Code Enforcement: (207) 363-1002 Police Department: (207) 363-1031

Village Fire Department: (207) 363-1015 Beach Fire Department: (207) 363-1014

FEES: Each application will incur a $60 fee, plus $30 for each license after the first. All NEW applications will have an additional $50 fee, and all license amendments will have a $25 fee. All fees are to be paid at time of submittal and shall be non-refundable. Cash or Check only; Please make check payable to Town of York.

Back to Agenda

THE TOWN OF

YORK, MAINE

186 York Street, York, Maine 03909

BUSINESS LICENSE APPLICATION

NOTE: Business Licenses are not transferable to another person, business or location.

Business Name: frankie + johnys

Street Address: 1594 Rte 1

Business Owner: john Shaw

Mailing Address: 1594 US Rte 1
Cape Neddick 03902

Phone Number: 207 363-1909

E-mail Address:

Business Manager: john Shaw

Mailing Address: 1594 US Rte
Cape Neddick 03902

Phone Number: 207 363-1909

E-mail Address:

Please indicate who is to be the Primary Contact with the Town: ☒ OWNER or ☐ MANAGER

Is the Business Owner same as the prior year? ☒ YES ☐ NO

Please indicate which Licenses or Local Approvals you seek:

Lodging:

___ Bed and Breakfast License (C/F)
___ Innkeeper License (C/F)
Number of Rooms: ____

Food and Beverage:

X Food Service License (C/F)
___ Liquor License (F/P)
___ Bottle Club License (F/P)
Number of Seats: 19

Entertainment:

___ Special Amusement License (F/P)
___ Dance Hall License (F/P)
___ Bowling Alley License (F)
___ Coin-Operated Amusement License (P)
___ Bingo, Beano and Games of Chance

Miscellaneous:

___ Transient Seller's License
___ Flea Market License
___ Junkyard, Auto Graveyard/Recycling License
___ Other: _____

C – Code Enforcement Inspection Required F – Fire Department Inspection Required P – Police Department Inspection Required

Code Enforcement: (207) 363-1002

Police Department: (207) 363-1031

Village Fire Department: (207) 363-1015

Beach Fire Department: (207) 363-1014

FEES: Each application will incur a $60 fee, plus $30 for each license after the first. All NEW applications will have an additional $50 fee, and all license amendments will have a $25 fee. All fees are to be paid at time of submittal and shall be non-refundable. Cash or Check only; Please make check payable to Town of York.

Back to Agenda

AGENDA ITEM NUMBER: ____

REQUEST FOR ACTION BY BOARD OF SELECTMEN

Date Submitted: September 18, 2014	**Type of Action:**
Date Action Requested: September 22, 2014	☐ **Procedural** ☒ **Formal Action**
Regular X **Work Session** __	☐ **Other:** _____
Subject: Property Redemption – 16 Pine Street	

TO: **BOARD OF SELECTMEN**

FROM: Stephen H. Burns, Interim Town Manager

RECOMMENDATION: authorize redemption of property

PROPOSED MOTION: I move to approve the redemption of Tax Map 0030 Lot 0042-D, 16 Pine Street, as requested, subject to the condition that all future owners comply with Town wetland regulations, and all taxes, interest and administrative costs being paid in full no later than November 21, 2014.

Discussion: At the meeting of August 11th the Board was asked to table this matter by the former owners, Ed and Lori Woods. They asked for additional time to evaluate options. Since that meeting I met with Mr. Woods to discuss options. I had originally proposed to place a deed restriction on the lot that would prohibit any wetland fill – the lot is almost 100% wetlands. Mr. Woods suggested that some fill might possibly be allowed if the Town's wetland rules ever change in the future, and that he was not interested in violating Town codes but also did not want to lose possible future options. Our compromise is that the Woods sign a letter indicating that they agree to abide by the Town's wetland rules. Rather than create a deed restriction, I recommend we simply place this Request for Action, the Board's decision, and the letter from Mr. and Mrs. Woods in the building file as a permanent part of the lot record. The condition is essentially a promise to comply with Town codes, which is required

Back to Agenda

anyway. This seems to me to be a fair compromise. I recommend approval of the redemption subject to the current and future owners being bound by this agreement.

Prepared By: _____ Reviewed By: _____

Back to Agenda

September 9, 2014

Town of York
Attn: Stephen H. Burns
Community Development Director
168 York St.
York, ME 03909

Dear Mr. Burns:

Should the Board of Selectman decide to transfer the property located at 16 Pine St. (Map 40, Lot 42) to us, Edward and Lori Woods, we will abide by all applicable Wetland ordinances and articles in place with the Town of York pertaining to this property.

We thank you for your time and consideration of this matter.

Sincerely,

Ed Woods Lori Woods

Edward and Lori Woods

Back to Agenda

AGENDA ITEM NUMBER: ____

REQUEST FOR ACTION BY BOARD OF SELECTMEN

Date Submitted: August 7, 2014	**Type of Action:**
Date Action Requested: August 11, 2014	☐ **Procedural** ☒ **Formal Action**
Regular X **Work Session** __	☐ **Other:** _____
Subject: Redemption Request: Tax Map 0030, Lot 0042-D – 16 Pine Street	

TO: **BOARD OF SELECTMEN**

FROM: Melissa M. Avery

RECOMMENDATION:

PROPOSED MOTION: I move to approve the redemption of Tax Map 0030, Lot 0042-D; 16 Pine Street, as requested, subject to the attached conditions being met and that all deed restrictions are in place and all taxes, interest and administrative costs are paid in full by no later than October 10, 2014

Discussion: Please see attached Memo for details.

FISCAL IMPACT:

DEPARTMENT LINE ITEM ACCOUNT:

BALANCE IN LINE ITEM IF APPROVED:

Prepared By: Melissa M Avery

Reviewed By: Robert B. Yandow

Back to Agenda

July 14, 2014

Town of York
186 York St.
York, ME 03909

Dear Sirs:

We are writing to request the forgiveness of foreclosure on property located at 16 Pine St., York.

Due to the change in address for us from a PO Box to our physical address, we did not receive an invoice(s) or notice of the foreclosure until we were told that the Code Enforcement officer was looking to contact us via my brother Gary Woods of Shoreline Builders, in York. Once we were informed of this, we went to the office of the Code Inspector and were informed that the property had been foreclosed on due to non-payment of 2012-2013 taxes.

We are asking that the property be returned to us upon full payment of any taxes, liens or fines that have been assessed. We would never have allowed this to go un-paid had we known. This property was purchased by our parents with funds from our grandfather who was a long term York property owner. Our entire family lives in York, we hope to someday be able to build on the property for the future of our children and grandchildren.

We thank you for your time and consideration of this matter.

Sincerely,

Edward R Woods
Lori Woods

Edward and Lori Woods

494 Back Rd.
Shapleigh, ME 04076
Tel. 207-490-1565
Cell: 207-432-6803

Back to Agenda

TO: Board of Selectmen
FROM: Melissa M. Avery
DATE: August 7, 2014
RE: Tax Foreclosure Redemption: Map 0030-Lot 0042-D; 16 Pine Street

Edward and Lori Woods, former property owners of property identified as Tax Map 0030, Lot 0042-D, located at 16 Pine Street in York, Maine, request to redeem this property for which the Town has a tax lien for Fiscal Years 2012, 2013 and 2014. The Town foreclosed on this property as of January 18, 2013 for non-payment of the FY2012 tax lien.

We are recommending to the Selectmen, that Edward and Lori Woods be allowed to redeem this property providing the following conditions are met:

Condition #1 – Edward and Lori Woods pay all current taxes, interest and lien costs owed, which totals $730.03 as of October 10, 2014.

Condition #2 – Edward and Lori Woods pay Town Administrative costs involved with the processing of the foreclosure disposition, a total of $200.00. This amount covers the cost of issuing a Quit Claim Deed and the administrative costs in processing this redemption.

Condition #3 – Edward and Lori Woods shall pay in full, to the Town of York, all current taxes, interest, administrative costs and lien costs, which total **$930.03** by no later than **October 10, 2014**.

Condition #4 - Edward and Lori Woods agree to a deed restriction on the parcel before transferring the property back to them – the deed restriction would prohibit any wetland fill on this lot, per Community Development Director's Memo dated 8/7/2014.

Back to Agenda

Parcel Information

Map-Lot
0030-0042-D

Owner(s)
Edward and Lori Woods

Party Requesting Redemption
Edward and Lori Woods

Size of Lot
.09 Acre

Assessed Value
$18,000

Description of Foreclosure Action
The Town has filed a tax lien on this property for the Fiscal Years 2012, 2013 and 2014. The FY12 lien matured and was foreclosed on January 18, 2013.

Taxes Owed
The total amount of taxes, interest and lien costs owed is $730.03 as of October 10, 2014; which breaks down as follows:

FY2012	$261.21
FY2013	$229.58
FY2014	$239.24

Taxes for Fiscal Year 2015 will be supplemented upon redemption of the above taxes.

Back to Agenda

Summary | Detail | Notes | Payment Plan

Access

- (•) Tax Map # 0030 0042 D
- ( ) Linked to Tax Map # 0030 0042 D
- ( ) Parcels Linked to Tax Map # 0030 0042 D
- ( ) YORK TOWN OF
- ( ) Linked to YORK TOWN OF

Filters

Year

Sub System

[x] Active A/R

[ ] Hide zero balance

Late Charges

As of Date 10/10/2014

[x] Display

[ ] Keep Setting

Daily Interest Amount $0.11

Year id	Sub System	Bill Number	Billed	Interest	Fee	Paid	Balance Due	Late Charges	Total Due	Up To 1st Due	Bar Code
2014	Tax Title	RE10165	$236.77				$236.77	$2.47	$239.24	$239.24	513526
2013	Tax Title	RE10163	$216.32				$216.32	$13.26	$229.58	$229.58	510202
2012	Tax Title	RE10186	$226.30		$9.11		$235.41	$25.80	$261.21	$261.21	287700
2011	Tax Title	RE10310	$221.26	$15.60	$8.75	$245.61	$0.00	$0.00	$0.00		170833
			$900.65	$15.60	$17.86	$245.61	$688.50	$41.53	$730.03		

Refresh | Search

Back to Agenda

MEMO

TO: Robert Yandow, Town Manager
FROM: Stephen H. Burns, Community Development Director SHB
DATE: August 7, 2014
RE: Redemption Request – 16 Pine Street

The owners seek to redeem the lot at 16 Pine Street. If the Board of Selectmen decides to pursue this request, I recommend the Town place a deed restriction on the parcel before transferring it back to the former owners – the deed restriction should prohibit any wetland fill on this lot.

The lot is 100% wetland (other than a bit of historic fill), and the lot is 100% within the 100-year floodplain. When I reviewed the property file for this lot I found a substantial record of activity dating back to the 1999 – 2006 era. Michael Cuomo conducted a wetland assessment, dated October 25, 1999. Michael Livingston, PE, evaluated a proposal to build a single-family home, and released his drainage study dated February 15, 2001. These were submitted as part of an application to the Shoreland/Inland Wetland Permit Review Committee, which on March 6, 2002, denied the application for a single family home and associated improvements. Subsequent to this there was a Board of Appeals case and then a court case (Woods, Woods & Trant v. Town of York, AP-02-043). The upshot of all this is that the lot was found to be unbuildable.

Back to Agenda

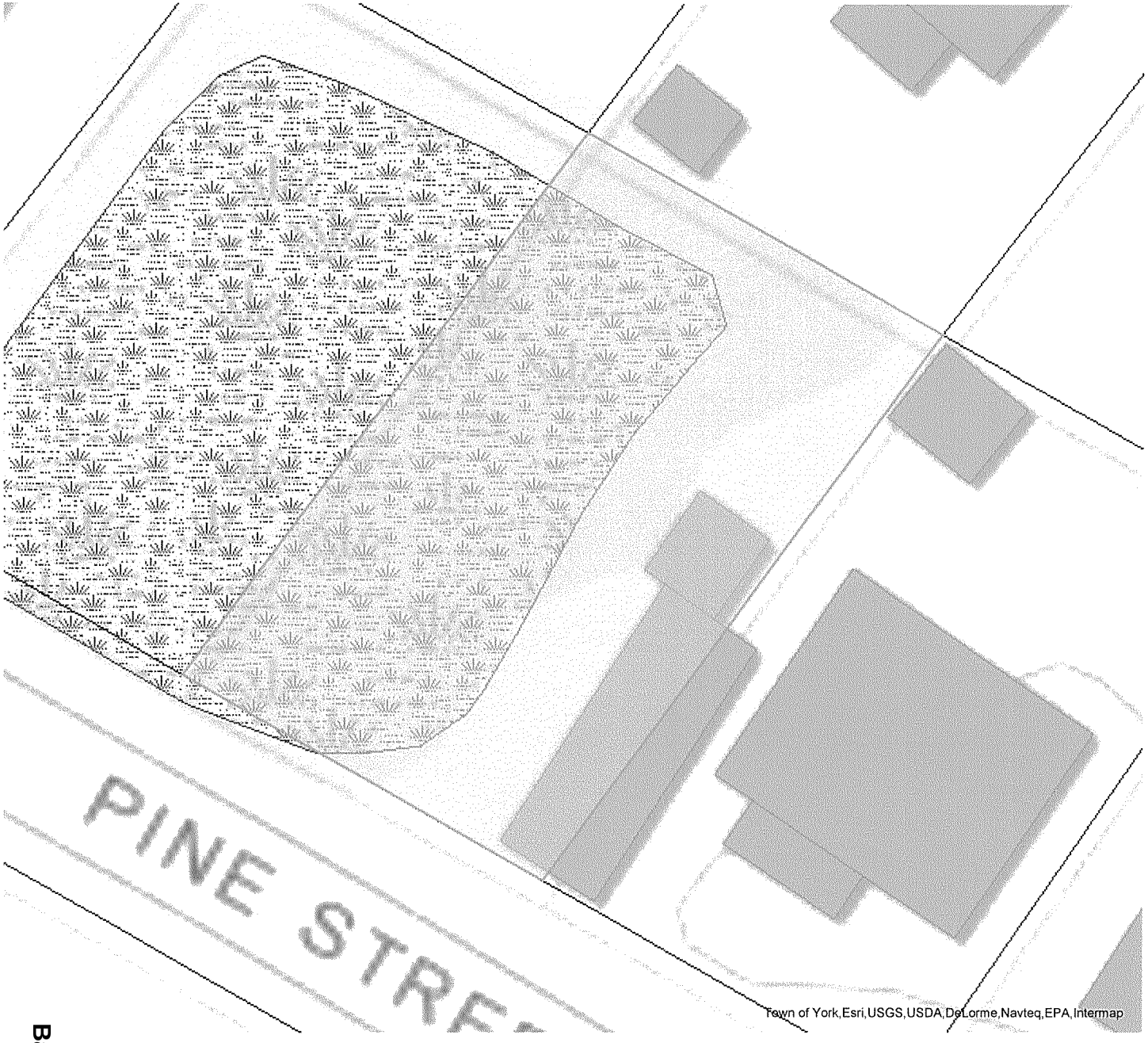

GIS Map Print

Subject Property Data

Parcel ID:	0030-0042-D
Assessing ID:	136-059
Owner Name:	YORK TOWN OF
Co-Owner:	
Property Location:	16 PINE STREET
Owner Addr:	186 YORK STREET
Owner CSZ:	YORK, ME 03909
Area (Acres):	0.09
Land Value:	$18,000.00
Building Value:	$0.00
Total Value:	$18,000.00
Book/Page:	1/ 1

Back to Agenda

S Data Disclaimer-The data contained in this document, or any accompanying document is a resource of general information provided on the World Wide Web for public convenience. The Town of York makes no warranty, representation or guaranty as to e content, sequence, accuracy, timeliness or completeness of any of the database information provided herein. The reader should not rely on the data provided herein. The Town of York expressly disclaims any representations and warranties, including, without limitation, the implied warranties of merchantability and fitness for a particular purpose. This disclaimer can be seen at under the Community Development Department GIS Maps website.

AGENDA ITEM NUMBER: ____

REQUEST FOR ACTION BY BOARD OF SELECTMEN

Date Submitted: September 18, 2014	**Type of Action:**
Date Action Requested: September 22, 2014	☐ **Procedural** ☒ **Formal Action**
Regular X **Work Session** __	☐ **Other:** _____
Subject: Purchase of a DPW Plow Truck	

TO: BOARD OF SELECTMEN

FROM: Stephen H. Burns, Interim Town Manager

RECOMMENDATION: I recommend purchase of the plow truck from Liberty International Trucks consistent with the September 3rd Request for Selectmen's Action

PROPOSED MOTION: I move to award the FY15 Plow Truck Chassis to Liberty International Trucks in the amount of $61,900.

Discussion: This matter was first discussed at the meeting of September 8th. Consistent with Section XVI (Sole Source Purchase) of the Board of Selectmen's *Purchasing Procedures Policy* (copy attached), the Town Manager may recommend to the Board of Selectmen a large purchase without a bidding process when such action will benefit the Town. I believe this to be the situation here, where the company that won the prior year's bidding process agreed to reduce its vehicle price for the new model while holding the trade-in price on the condition the Town not go out to bid. The Public Works Director has indicated to me and to the Board that he believes this to be an excellent deal for the Town.

Back to Agenda

FISCAL IMPACT: $61,900
DEPARTMENT LINE ITEM ACCOUNT: 250.0000.6002
BALANCE IN LINE ITEM IF APPROVED: $91,100

Prepared By: _____ Reviewed By: _____

Back to Agenda

Purchasing Procedures

I. PURPOSE

The purpose of this purchasing procedure is:

1. to procure materials, supplies, equipment and services best suited to the job which the department has to perform, without adversely affecting department operation;

2. to procure the correct quantities of items required;

3. to insure goods and services at the best interest of the Town;

4. to obtain critical materials when required to meet emergencies;

5. to dispose of unneeded inventory.

II. DEFINITIONS

1. **ADVERTISING:** A form of public notice of an intended purchase.

2. **BEST KNOWLEDGE PROCUREMENT:** Purchases of small quantities of goods or services based on the department's knowledge of the best sources for such purchases when other forms of competitive procurement are not cost effective.

3. **COMPETITIVE PROCUREMENT:** Any process for acquiring goods or services in which more than one (1) individual or company is solicited to propose price and delivery terms in such a manner as to encourage competition between prospective suppliers.

4. **FORMAL PROCUREMENT:** Formal procurement is characterized by request for prices and terms with written responses. The most formal procurement includes advertisement in appropriate publications or public notice with requirements for submission for sealed proposals and public bid openings.

5. **GOODS:** Anything purchased other then services or real property.

6. **INFORMAL PROCUREMENT**: The process in which proposals are solicited by letter, telephone, facsimile or other means for relatively small purchases. A written record shall be kept of such procurement's consisting of,

Back to Agenda

as a minimum, the names, dates and prices received as well as any other information required to document the competitive aspects of the purchase.

7. **NEGOTIATED PROCUREMENT**: A process for acquiring goods and services in which the purchaser and seller negotiate any or all parts of the price and delivery terms. Negotiations may be part of the procurement process along with bidding.

8. **PROFESSIONAL SERVICE:** Infrequent, technical and/or unique functions performed by independent contractors whose occupation is the rendering of such services. Contracts may be to partnerships, firms, or corporations as well as individuals. Examples would be architectural and engineering, management and systems consultations and research.

9. **PROPRIETARY SERVICE:** Work by independent contractors where the process is more important than the product. Contracts usually are to partnerships, firms or corporations rather than individuals. Examples are janitorial and custodial or maintenance and repair service.

10. **PURCHASE ORDER**: A purchaser's document to formalize a purchase transaction with a vendor.

11. **SEALED BIDS:** A form of competitive procurement in which sealed bids are solicited which are opened and read at a specific time and place and in which the other bidders have no knowledge of the specific price and delivery proposals of the other bids until bid opening.

12. **SERVICES:** Work performed to meet a demand; especially work that is not connected with a manufacturing process, such as a professional service or proprietary service.

13. **SOLICITATION:** Solicitation is the process by which vendors are requested to propose terms and conditions for an item or service which is proposed to be purchased.

14. **SPECIFICATIONS:** A description of the goods or services to be procured. For the purposes of this Administrative Policy, a specification shall be as general as possible and shall describe the performance of the good or service as much as possible. Where a specification contains a reference to a specific product or firm, it shall be interpreted as being functionally equivalent to that firm or product unless explicitly stated otherwise.

III. **SPECIFICATION REQUIRED:** Specifications will be prepared for all purchases whenever possible and in all cases where any single item in the purchase is estimated to have a cost in excess of $2500 or a total purchases in excess of $10,000. Specifications shall be in writing for all formally advertised

Back to Agenda

bids. Town Manager may waive written requirement for cause. The justification for such waiver shall also be in writing.

IV. **ADVERTISING:** Solicitations shall be given the widest advertisement appropriate for the proposed purchase. This may be done through the media, magazines, professional publications or public notice, such as Selectmen's meetings are done. Due consideration shall be given to the nature of the item or service and the media, magazine or professional publication which probable vendors might be expected to be exposed to. Advertisements shall contain a succinct summary of the item or service, the location of detailed specifications, if any, and the requirements for bid submittal.

V. **BID AND TABULATION:** Proposals shall be opened in the Town Manager's Office at the designated time specified in the solicitation. The Town Manager and appropriate Department Heads will review the bids and make recommendations to the Board of Selectmen.

VI. **AWARD:** All purchases over $2500 for which formal proposals have been taken shall be awarded by the Board of Selectmen. In all cases the Board of Selectmen shall reserve the right to award proposals to vendors whose combination of price, product and performance history are determined to be in the best interest of the Town. The Town reserves the right to accept or reject any or all proposals at any time for any reason and to waive any formalities

VII. **BID AND PERFORMANCE BONDS**: When specified in the solicitation, the successful vendor shall produce an acceptable performance or surety bid bond at the time of bid opening. If a performance or surety bond is required, it shall be presented prior to execution of any contract.

VIII. **REQUIREMENTS FOR COMPETITIVE PROCUREMENTS:** Competitive procurement is strongly encouraged for all purchases. The table below contains the minimum requirements for complying with the various complexities of the procurement process:

COST THRESHOLDS:

Amount Involved	Min. Competition	Approved By
Up to $500	Best Knowledge	Dept. Head
$501 - $2500	Informal	Dept. Head
$2501* or more	Formal	Selectmen

*Availability of funds of all Purchase Orders above $2500 need to be verified by the Finance Department

IX. **EMERGENCY BUYING:** An emergency purchase is a purchase which is essential to prevent delays in work which might affect the safety, health or

Back to Agenda

convenience of the community. Permission for emergency purchasing shall be obtained from the Town Manager or his/her designee, if possible, and a written report of such action filed with the Town Manager within three (3) days of such action and the report will be provided to the Board of Selectmen.

X. **ABSENCE OF SECOND FORMAL PROPOSAL**: Where there is only one formal proposal received, the Town Manager will determine appropriate action to be taken.

XI. **PURCHASE ORDERS:** Purchase orders are strongly recommended on all purchases, but must be used on all purchases over $1000. When purchase orders are used they can also be used for payment authorization after you have received the goods or service. Funds will be encumbered when Purchase Orders are used.

XII. **SERVICES:** Professional and Proprietary Services, including engineering, architectural, auditing, legal, and janitorial, date software, heavy equipment operators and other services commonly considered professional, may be secured through negotiated or competitive procurement. Professional and Proprietary Service agreements should be on a fixed basis for a clearly defined scope of work whenever possible.

XIII. **PETTY CASH PURCHASES:** Items not carried in stock by a central stock point may be purchased through petty cash to the limit of the petty cash authorization which shall not exceed $100 without explicit approval of the Town Manager. The contents of the petty cash drawer shall consist of the total amount of petty cash authorized and/or receipts. Petty cash shall be replenished by check upon submission of receipts and supporting documentation on Payment Request forms showing what account(s) to be charged.

XIV. **COOPERATIVE PURCHASING:** Where prices on goods or services have been determined by competitive procurement by an agency of the State of Maine or any other entity through which the Town purchases cooperatively, that price shall be considered sufficiently competitive for the purchase of authorized items obtained as outlined above. This specifically includes equipment and supplies available through bidding of the State of Maine, Department of Transportation and similar agencies for trucks, cars and related equipment.

XV. **DISPOSAL OF TOWN PROPERTY:** When an item is surplus to the needs of a department, it shall first be made available to other departments in the Town for their use. Transfer of equipment between departments shall be recorded in the General Fixed Assets Group of Accounts (if applicable). If an item is surplus and not required by another department, it shall be made available for advertised bid or auction. Sale by bid or auction will be approved by the Board of Selectmen before transfer of property. The Town may reject any and all bids or auction offers.

Back to Agenda

XVI. SOLE SOURCE PURCHASE:

1. In all circumstances where, in the Town Manager's judgment it is in the best interest of the Town to negotiate purchases of an item from a single vendor and item costs in excess of $2500, the Town Manager shall present the Board of Selectmen with information describing why a "sole source" purchase is in the best interests of the Town. This information shall be presented to the Board prior to requesting a formal proposal from the vendor. Upon receipt of the information, the Board may request a work session to discuss the proposed purchase.

2. In circumstances where the purchase is less than $2500 but more than $500, the Department asking the purchase from a single vendor must justify the purchase in writing to the Town Manager.

XVII. BIDDERS LIST: The Town shall maintain a bidders list by trade, service and commodity. Companies and individuals qualifying for this list shall be notified whenever the Town is seeking competitive bids for their particular trade, service or commodity.

XVIII. QUANTITY PURCHASES:

1. Whenever the Town anticipates purchasing substantively the same goods or services on multiple occasions or for multiple locations or departments and the total amount of such purchases, if aggregated, would qualify for a higher "Cost Threshold" as defined in Section VIII, the bidding procedure associated with the higher "Cost Threshold" will be used, whether the actual purchases to be made individually or in quantity.

2. The Town will consolidate purchases of similar items to take advantage of quantity discounts whenever possible.

XIX. WAIVER: A majority of the Board of Selectmen may waive the requirements of this policy when, in the judgment of the Board of Selectmen, it is in the best interest of the Town, provided such waiver is the result of a majority vote of the Board of Selectmen at a regular meeting.

Adopted 10/09/1990
Amended 09/10/1993
Amended 12/14/1993
Re-adopted 05/28/1996
Adopted as Amended 05/13/1997
Amended 01/24/2011

Back to Agenda

AGENDA ITEM

REQUEST FOR ACTION BY BOARD OF SELECTMEN

Date Submitted: 9/3/2014	**Type of Action:**
Date Action Requested: 9/8/2014	☐ **Procedural** ☒ **Formal Action**
Regular X **Work Session** __	☐ **Other:** _____
Subject: DPW Plow Truck Chassis bid recommendation.	

TO: BOARD OF SELECTMEN

FROM: Dean Lessard, Director of Public Works

RECOMMENDATION: The Department recommends that Liberty International Trucks be awarded the bid for the FY 2015 Public Works Plow Truck Chassis.

PROPOSED MOTION: I move to award the FY 2015 Plow Truck Chassis to Liberty International Trucks in the amount of $61,900.00.

Discussion:

- On August 8, 2013 The Department of Public Works solicited bids from four different truck vendors.
- On August 22, 2013 four responsive bids were opened for an International 7400 truck chassis with the same features. The following bids were received:

1. Liberty International Trucks	$62,040.00
2. C.B. International	$64,910.00
3. Portland North Truck Center	$68,100.00
4. Morrison and Sylvester Inc.	$70,170.00

- On September 9, 2013 The Board of Selectmen awarded FY 2014 Plow Truck Chassis to the low bidder – Liberty International Trucks in the amount of $62,040.

Back to Agenda

- On July 8, 2014 DPW met with James Ramsey of Liberty International Trucks. They were the low bidder for the FY 2014 Plow Truck. He agreed to sell the Town of York a 2015 International 7400 truck chassis with all the model year upgrades (engine & emissions) for $61,900 which is less than the FY 2014 year's price if we order the truck from them without going back out to bid.

Historical Costs: Liberty International Trucks has agreed to The following table shows the historical costs of this truck chassis.

Comparison Values	FY2010	FY2011	FY2012	FY2013	FY2014	FY2015
Chassis Price	$47,968	$56,688	$61,290	$61,290	$62,040	$61,900
Percentage Increase		+18.2%	+8.1%	0%	+1.2%	-0.2%

FISCAL IMPACT: $61,900.00

DEPARTMENT LINE ITEM ACCOUNT: 250.0000.6002

BALANCE IN LINE ITEM IF APPROVED: $91,100

Prepared By: Dean Lessard_____ Reviewed By: _____

Back to Agenda

7400 SFA 4x2

Sales Proposal For:

Town of York - Highway

Presented By:

LIBERTY INT'L TRKS OF NH

Back to Agenda

INTERNATIONAL®

August 14, 2014

Prepared For:
Town of York - Highway
Mat Gray
Finance Office
York, ME 03909-
(207)363 - 1011

Presented By:
LIBERTY INT'L TRKS OF NH
James C Ramsay
1400 S. WILLOW STREET
MANCHESTER NH 03103 -
(603)623-8873

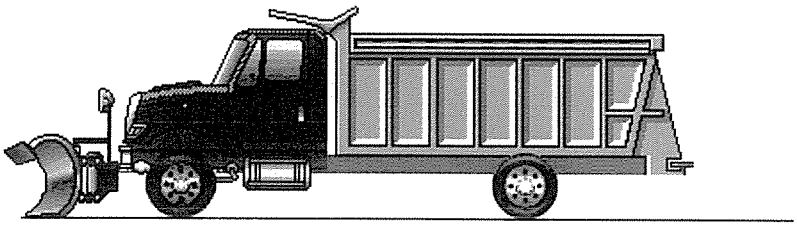

Model Profile
2015 7400 SFA 4X2 (SA525)

MISSION:	Requested GVWR: 39000. Calc. GVWR: 37780
DIMENSION:	Wheelbase: 177.00, CA: 102.00, Axle to Frame: 63.00
ENGINE, DIESEL:	{Navistar N9} EPA 10, SCR, 315 HP @ 2000 RPM, 950 lb-ft Torque @ 1200 RPM, 2200 RPM Governed Speed, 315 Peak HP (Max)
TRANSMISSION, AUTOMATIC:	{Allison 3000_RDS_P} 5th Generation Controls; Close Ratio, 6-Speed, With Double Overdrive; On/Off Hwy; Includes Oil Level Sensor, With PTO Provision, Less Retarder, With 80,000-lb GVW & GCW Max.
CLUTCH:	Omit Item (Clutch & Control)
AXLE, FRONT NON-DRIVING:	{Meritor MFS-16-143A} Wide Track, I-Beam Type, 16,000-lb Capacity
AXLE, REAR, SINGLE:	{Meritor RS-23-160} Single Reduction, 23,000-lb Capacity, 200 Wheel Ends, Driver Controlled Locking Differential Gear Ratio: 6.83
CAB:	Conventional
TIRE, FRONT:	(2) 12R22.5 G661 HSA (GOODYEAR) 484 rev/mile, load range H, 16 ply
TIRE, REAR:	(4) 12R22.5 G622 RSD (GOODYEAR) 482 rev/mile, load range H, 16 ply
SUSPENSION, RR, SPRING, SINGLE:	Vari-Rate; 31,000-lb Capacity, Includes 4500-lb Capacity Multileaf Auxiliary
PAINT:	Cab schematic 100GM Location 1: 6800, Deep Tartan Blue (Prem) Chassis schematic N/A

Vehicle Specifications
2015 7400 SFA 4X2 (SA525)

Code	Description
SA52500	Base Chassis, Model 7400 SFA 4X2 with 177.00 Wheelbase, 102.00 CA, and 63.00 Axle to Frame.
1CAJ	FRAME RAILS Heat Treated Alloy Steel (120,000 PSI Yield); 10.866" x 3.622" x 0.433" (276.0mm x 92.0mm x 11.1mm); 456.0" (11582mm) Maximum OAL
1LLA	BUMPER, FRONT Steel, Swept Back
	Includes : BUMPER, FRONT Powder Coated Gray (Argent) Color
1WDS	FRAME EXTENSION, FRONT Integral; 20" In Front of Grille
1WEV	WHEELBASE RANGE 146" (370cm) Through and Including 195" (495cm)
2ARU	AXLE, FRONT NON-DRIVING {Meritor MFS-16-143A} Wide Track, I-Beam Type, 16,000-lb Capacity
	Notes : The following features should be considered when calculating Front GAWR: Front Axles; Front Suspension; Brake System; Brakes, Front Air Cam; Wheels; Tires.
3ADE	SUSPENSION, FRONT, SPRING Parabolic, Taper Leaf; 16,000-lb Capacity; With Shock Absorbers
	Includes : SPRING PINS Rubber Bushings, Maintenance-Free
	Notes : The following features should be considered when calculating Front GAWR: Front Axles; Front Suspension; Brake System; Brakes, Front Air Cam; Wheels; Tires.
3WAJ	SPRINGS, FRONT AUXILIARY Air Bag, Right Side Only, Driver Control
4091	BRAKE SYSTEM, AIR Dual System for Straight Truck Applications
	Includes : BRAKE LINES Color and Size Coded Nylon : DRAIN VALVE Twist-Type : DUST SHIELDS, FRONT BRAKE : DUST SHIELDS, REAR BRAKE : GAUGE, AIR PRESSURE (2) Air 1 and Air 2 Gauges; Located in Instrument Cluster : PARKING BRAKE CONTROL Yellow Knob, Located on Instrument Panel : PARKING BRAKE VALVE For Truck : QUICK RELEASE VALVE Bendix On Rear Axle for Spring Brake Release: 1 for 4x2, 2 for 6x4 : SLACK ADJUSTERS, FRONT Automatic : SLACK ADJUSTERS, REAR Automatic : SPRING BRAKE MODULATOR VALVE R-7 for 4x2, SR-7 with relay valve for 6x4
	Notes : Rear Axle is Limited to 23,000-lb GAWR with Code 04091 BRAKE SYSTEM, AIR and Standard Rear Air Cam Brakes Regardless of Axle/Suspension Ordered.

Back to Agenda

Code	Description
4193	BRAKES, FRONT, AIR CAM 16.5" x 6", Includes 24 Sqln Long Stroke Brake Chambers
	Notes : The following features should be considered when calculating Front GAWR: Front Axles; Front Suspension; Brake System; Brakes, Front Air Cam; Wheels; Tires.
4619	TRAILER CONNECTIONS Four-Wheel, With Hand Control Valve and Tractor Protection Valve, for Straight Truck
4732	DRAIN VALVE {Berg} Manual; With Pull Chain, for Air Tank
	Includes : DRAIN VALVE Mounted in Wet Tank
4AZA	AIR BRAKE ABS {Bendix AntiLock Brake System} Full Vehicle Wheel Control System (4-Channel)
4EBS	AIR DRYER {Bendix AD-9} With Heater
	Includes : AIR DRYER LOCATION Inside Left Rail, Back of Cab
4ETE	BRAKE CHAMBERS, FRONT AXLE {Haldex} 24 Sqln
4EVL	BRAKE CHAMBERS, REAR AXLE {Haldex GC3030LHDHO} 30/30 Spring Brake
	Includes : BRAKE CHAMBERS, SPRING (2) Rear Parking; WITH TRUCK BRAKES: All 4x2, 4x4; WITH TRACTOR BRAKES: All 4x2, 4x4; 6x4 & 6x6 with Rear Tandem Axles Less Than 46,000-lb. or GVWR Less Than 54,000-lb.
4LAA	SLACK ADJUSTERS, FRONT {Haldex} Automatic
4LGA	SLACK ADJUSTERS, REAR {Haldex} Automatic
4NDB	BRAKES, REAR, AIR CAM S-Cam; 16.5" x 7.0"; Includes 30/30 Sq.In. Long Stroke Brake Chamber and Spring Actuated Parking Brake
	Notes : The following features should be considered when calculating Rear GAWR: Rear Axles; Rear Suspension; Brake System; Brakes, Rear Air Cam; Brake Shoes, Rear; Special Rating, GAWR; Wheels; Tires.
4SBC	AIR COMPRESSOR {Bendix Tu-Flo 550} 13.2 CFM Capacity
4WZJ	AIR TANK LOCATION (2) : One Mounted Under Each Frame Rail, Front of Rear Suspension, Parallel to Rail
5708	STEERING COLUMN Tilting
5CAL	STEERING WHEEL 2-Spoke, 18" Diam., Black
5PTB	STEERING GEAR (2) {Sheppard M-100/M-80} Dual Power
7BEP	EXHAUST SYSTEM Switchback Horizontal Aftertreatment Device, Frame Mounted Right Side Under Cab; Includes Single Vertical Tail Pipe, Frame Mounted Right Side Back of Cab

Code	Description
7SDM	ENGINE EXHAUST BRAKE for Navistar N9/10 I6 Engines; Electronically Activated
8000	ELECTRICAL SYSTEM 12-Volt, Standard Equipment Includes : BATTERY BOX Steel with Plastic Lid : DATA LINK CONNECTOR For Vehicle Programming and Diagnostics In Cab : FUSES, ELECTRICAL SAE Blade-Type : HAZARD SWITCH Push On/Push Off, Located on Top of Steering Column Cover : HEADLIGHT DIMMER SWITCH Integral with Turn Signal Lever : HEADLIGHTS (2) Sealed Beam, Round, with Chrome Plated Bezels : JUMP START STUD Located on Positive Terminal of Outermost Battery : PARKING LIGHT Integral with Front Turn Signal and Rear Tail Light : RUNNING LIGHT (2) Daytime, Included With Headlights : STARTER SWITCH Electric, Key Operated : STOP, TURN, TAIL & B/U LIGHTS Dual, Rear, Combination with Reflector : TURN SIGNAL SWITCH Self-Cancelling for Trucks, Manual Cancelling for Tractors, with Lane Change Feature : TURN SIGNALS, FRONT Includes Reflectors and Auxiliary Side Turn Signals, Solid State Flashers; Flush Mounted : WINDSHIELD WIPER SWITCH 2-Speed with Wash and Intermittent Feature (5 Pre-Set Delays), Integral with Turn Signal Lever : WINDSHIELD WIPERS Single Motor, Electric, Cowl Mounted : WIRING, CHASSIS Color Coded and Continuously Numbered
8518	CIGAR LIGHTER Includes Ash Cup
8GHK	ALTERNATOR {Delco Remy 40SI} Brushless, 12 Volt 240 Amp. Capacity, Pad Mount, with Remote Voltage Sensor
8HAB	BODY BUILDER WIRING Back of Standard Cab at Left Frame or Under Extended or Crew Cab at Left Frame; Includes Sealed Connectors for Tail/Amber Turn/Marker/ Backup/ Accessory Power/Ground and Sealed Connector for Stop/Turn
8MKX	BATTERY SYSTEM {International} Maintenance-Free (3) 12-Volt 2775CCA Total
8RGA	2-WAY RADIO Wiring Effects; Wiring With 20 Amp Fuse Protection, Includes Ignition Wire With 5 Amp Fuse, Wire Ends Heat Shrink and Routed to Center of Header Console in Cab
8RME	RADIO AM/FM/WB/Clock/3MM Auxiliary Input, with Multiple Speakers, With CD Player
8THB	BACK-UP ALARM Electric, 102 dBA
8THJ	AUXILIARY HARNESS 3.0' for Auxiliary Front Head Lights and Turn Signals for Front Plow Applications
8TME	TRAILER CONNECTION SOCKET 7-Way; Mounted at Rear of Frame, Wired for Turn Signals Independent of Stop, Compatible With Trailers That Have Amber or Side Turn Lamps
8VAY	HORN, ELECTRIC Disc Style

Code	Description
8VZR	SWITCH, BODY CIRCUITS, MID for Bodybuilder, 6 Momentary Switches in Instrument Panel; One Power Module with 6 Channels, 20 Amp Max. Per Channel, 80 Amp Max Output, Switches Control Power Module Through Multiplex Wiring, Mounted in Cab Behind Driver Seat
8WBW	JUMP START STUD Remote Mounted
	Includes : JUMP START STUD Mounted to Battery Box
8WCL	HORN, AIR Black, Single Trumpet, Air Solenoid Operated
8WEK	BATTERY BOX Steel, With Fiberglass Cover; Mounted 35" Back of Cab, Right Side Perpendicular to Frame Rail
8WGL	WINDSHIELD WIPER SPD CONTROL Force Wipers to Slowest Intermittent Speed When Park Brake Set and Wipers Left on for a Predetermined Time
8WMA	SWITCH, TOGGLE, FOR WORK LIGHT Lighted; on Instrument Panel and Wiring Effects for Customer Furnished Back of Cab Light
8WPH	CLEARANCE/MARKER LIGHTS (5) {Truck Lite} Amber LED Lights, Flush Mounted on Cab or Sunshade
8WPZ	TEST EXTERIOR LIGHTS Pre-Trip Inspection will Cycle all Exterior Lamps Except Back-up Lights
8WRB	HEADLIGHTS ON W/WIPERS Headlights Will Automatically Turn on if Windshield Wipers are turned on
8WTL	STARTING MOTOR {Delco Remy 39MT} 12 Volt; Gear Reduced, With Thermal Over-Crank Protection
8WWJ	INDICATOR, LOW COOLANT LEVEL With Audible Alarm
8WXD	ALARM, PARKING BRAKE Electric Horn Sounds in Repetitive Manner When Vehicle Park Brake is "NOT" Set, With Ignition "OFF" and any Door Opened
8XAH	CIRCUIT BREAKERS Manual-Reset (Main Panel) SAE Type III With Trip Indicators, Replaces All Fuses Except For 5-Amp Fuses
8XGW	BATTERY DISCONNECT SWITCH {Joseph Pollak 51-315} Positive Type, Locking, Lever Operated, Cab Mounted, Disconnects Charging Circuits
9ANG	HOOD, HATCH (01) for Servicing
9HAN	INSULATION, UNDER HOOD for Sound Abatement
9HBM	GRILLE Stationary, Chrome
9HBN	INSULATION, SPLASH PANELS for Sound Abatement
9WBC	FRONT END Tilting, Fiberglass, With Three Piece Construction; for 2007 & 2010 Emissions
10060	PAINT SCHEMATIC, PT-1 Single Color, Design 100

Code	Description
	Includes : PAINT SCHEMATIC ID LETTERS "GM"
10761	PAINT TYPE Base Coat/Clear Coat, 1-2 Tone
10769	PAINT CLASS Premium Color
10943	KEYS - ALL ALIKE Fleet - Includes Ignition and Cab Door Keys
10WBB	KEYS - ALL ALIKE, ID Z-200
10WJH	PROMOTIONAL PACKAGE Government and Municipal Silver Package; Two Year Limited Subscription of On-Command Service Information (Formerly Fleet ISIS), and On-Command Parts Information (Formerly Fleet Parts Catalog), Requires Specific Feature Combinations
11001	CLUTCH Omit Item (Clutch & Control)
12851	PTO EFFECTS, ENGINE FRONT Less PTO Unit, Includes Adapter Plate on Engine Front Mounted
12926	RADIATOR HOSES Silicone; Molded
12959	BLOCK HEATER, ENGINE {Phillips} 120 Volt/1250 Watt
	Includes : BLOCK HEATER SOCKET Receptacle Type; Mounted below Drivers Door
12NWD	ENGINE, DIESEL {Navistar N9} EPA 10, SCR, 315 HP @ 2000 RPM, 950 lb-ft Torque @ 1200 RPM, 2200 RPM Governed Speed, 315 Peak HP (Max)
	Includes : AIR COMPRESSOR AIR SUPPLY LINE Naturally-Aspirated (Air Brake Chassis Only) : ANTI-FREEZE Red Shell Rotella Extended Life Coolant; -40 Degrees F/ -40 Degrees C; for MaxxForce and Navistar Engines : COLD STARTING EQUIPMENT Intake Manifold Electric Grid Heater with Engine ECM Control : CRUISE CONTROL Electronic; Controls Integral to Steering Wheel : ENGINE OIL DRAIN PLUG Magnetic : ENGINE SHUTDOWN Electric, Key Operated : FUEL FILTER Included with Fuel/Water Separator : FUEL/WATER SEPARATOR Fuel/Water Separator and Fuel Filter in a Single Assembly; With Water-in-Fuel Sensor; Engine Mounted : GOVERNOR Electronic : OIL FILTER, ENGINE Spin-On Type : WET TYPE CYLINDER SLEEVES
12THZ	FAN DRIVE {Horton Drivemaster Polar Extreme} Direct Drive Type, Two Speed, With Residual Torque Device for Disengaged Fan Speed
	Includes : FAN Nylon

Code	Description
12UCW	RADIATOR Aluminum, Cross Flow, Series System; 1228 Sqln Core and 648 Sqln Charge Air Cooler and With Transmission Oil Cooler
12UNH	FEDERAL EMISSIONS EPA, OBD and GHG Certified for Calendar Year 2014; N9 & N10 Engines
12VAG	AIR CLEANER Single Element, with Integral Snow Valve and In-Cab Control Includes : GAUGE, AIR CLEANER RESTRICTION Air Cleaner Mounted
12VXT	THROTTLE, HAND CONTROL Engine Speed Control; Electronic, Stationary, Variable Speed; Mounted on Steering Wheel
12VYL	ACCESSORY WIRING, SPECIAL for Road Speed Wire Coiled Under Instrument Panel for Customer Use
12VYP	ENGINE CONTROL, REMOTE MOUNTED - No Provision Furnished for Remote Mounted Engine Control
12WZC	EMISSION COMPLIANCE 5 Min., Tamper-Proof Engine Shutdown System, Complies With California Clean Air Regulations, Does Not Certify Engine for Low-NOx Extended Idling
13AVR	TRANSMISSION, AUTOMATIC {Allison 3000_RDS_P} 5th Generation Controls; Close Ratio, 6-Speed, With Double Overdrive; On/Off Hwy; Includes Oil Level Sensor, With PTO Provision, Less Retarder, With 80,000-lb GVW & GCW Max.
13WBL	TRANSMISSION SHIFT CONTROL {Allison} Push-Button Type; for Allison 3000 & 4000 Series Transmission
13WLP	TRANSMISSION OIL Synthetic; 29 thru 42 Pints
13WUC	ALLISON SPARE INPUT/OUTPUT for Rugged Duty Series (RDS); General Purpose Trucks, Construction
13WYH	TRANSMISSION TCM LOCATION Located Inside Cab
13WYK	SHIFT CONTROL PARAMETERS Allison Load Based Shift Schedules (LBSS)
14ARB	AXLE, REAR, SINGLE {Meritor RS-23-160} Single Reduction, 23,000-lb Capacity, 200 Wheel Ends, Driver Controlled Locking Differential . Gear Ratio: 6.83 Includes : REAR AXLE DRAIN PLUG (1) Magnetic, For Single Rear Axle Notes : The following features should be considered when calculating Rear GAWR: Rear Axles; Rear Suspension; Brake System; Brakes, Rear Air Cam; Brake Shoes, Rear; Special Rating, GAWR; Wheels; Tires. : When Specifying Axle Ratio, Check Performance Guidelines and TCAPE for Startability and Performance
14SAL	SUSPENSION, RR, SPRING, SINGLE Vari-Rate; 31,000-lb Capacity, Includes 4500-lb Capacity Multileaf Auxiliary

Code	Description
	Notes : The following features should be considered when calculating Rear GAWR: Rear Axles; Rear Suspension; Brake System; Brakes, Rear Air Cam; Brake Shoes, Rear; Special Rating, GAWR; Wheels; Tires.
14WMG	AXLE, REAR, LUBE {EmGard FE-75W-90} Synthetic Oil; 30 thru 39.99 Pints
15DYP	DEF TANK 9.5 U.S. Gal. 36.0L Capacity, Frame Mounted Outside Left Rail, Under Cab
15LKG	FUEL/WATER SEPARATOR with Thermostatic Fuel Temperature Controlled Electric Heater, and Filter Restriction/Change Indicator, Includes Standard Equipment Water-in-Fuel Sensor
15SWE	FUEL TANK Top Draw; Non-Polished Aluminum, 26" Diam., 70 U.S. Gal., 265 L Capacity Mounted Left Side, Under Cab
16030	CAB Conventional
	Includes : ARM REST (2) Molded Plastic; One Each Door : COAT HOOK, CAB Located on Rear Wall, Centered Above Rear Window : CUP HOLDERS Two Cup Holders, Located in Lower Center of Instrument Panel : DOME LIGHT, CAB Rectangular, Door Activated and Push On-Off at Light Lens, Timed Theater Dimming, Integral to Console, Center Mounted : GLASS, ALL WINDOWS Tinted : GRAB HANDLE, CAB INTERIOR (1) "A" Pillar Mounted, Passenger Side : GRAB HANDLE, CAB INTERIOR (2) Front of "B" Pillar Mounted, One Each Side : INTERIOR SHEET METAL Upper Door (Above Window Ledge) Painted Exterior Color : STEP (4) Two Steps Per Door
16HBA	GAUGE CLUSTER English With English Electronic Speedometer
	Includes : GAUGE CLUSTER (6) Engine Oil Pressure (Electronic), Water Temperature (Electronic), Fuel (Electronic), Tachometer (Electronic), Voltmeter, Washer Fluid Level : ODOMETER DISPLAY, Miles, Trip Miles, Engine Hours, Trip Hours, Fault Code Readout : WARNING SYSTEM Low Fuel, Low Oil Pressure, High Engine Coolant Temp, and Low Battery Voltage (Visual and Audible)
16HGH	GAUGE, OIL TEMP, ALLISON TRAN
16HKT	IP CLUSTER DISPLAY On Board Diagnostics Display of Fault Codes in Gauge Cluster
16HLJ	GAUGE, DEF FLUID LEVEL
16JNV	SEAT, DRIVER {National 2000} Air Suspension, High Back With Integral Headrest, Cloth, Isolator, 1 Chamber Lumbar, 2 Position Front Cushion Adjust, -3 to +14 Degree Back Angle Adjust
	Includes : SEAT BELT 3-Point, Lap and Shoulder Belt Type

Code	Description
16SDL	MIRRORS (2) {Lang Mekra} Rectangular, 7.44" x 14.84" & 7.44" sq. Convex Both Sides, 102" Inside Spacing, Breakaway Type, Heated Heads Thermostatic Controlled, Black Heads, Brackets and Arms
16SEE	GRAB HANDLE Chrome; Towel Bar Type With Anti-Slip Rubber Inserts; for Cab Entry Mounted Left Side Only at "B" Pillar
16SJW	MIRROR, CONVEX, HOOD MOUNTED (2) {Lang Mekra} Heated, Left and Right Sides 7.44" Sq
16SMR	SEAT, PASSENGER {National} Non Suspension, High Back With Integral Headrest, Cloth, With Fixed Back, With Under Seat Storage
16VSL	WINDSHIELD Heated, Single Piece
16WBY	ARM REST, RIGHT, DRIVER SEAT
16WCT	AIR CONDITIONER {Blend-Air} With Integral Heater & Defroster Includes : HEATER HOSES Premium : HOSE CLAMPS, HEATER HOSE Mubea Constant Tension Clamps : REFRIGERANT Hydrofluorocarbon HFC-134A
16WJT	INSTRUMENT PANEL Center Section, Ergonomic Panel
16WJU	WINDOW, POWER (2) And Power Door Locks, Left and Right Doors, Includes Express Down Feature
16WKY	HVAC FRESH AIR FILTER
16WLS	FRESH AIR FILTER Attached to Air Intake Cover on Cowl Tray in Front of Windshield Under Hood
16WRZ	CAB INTERIOR TRIM Premium Includes : "A" PILLAR COVER Molded Plastic : CAB INTERIOR TRIM PANELS Cloth Covered Molded Plastic, Full Height; All Exposed Interior Sheet Metal is Covered Except for the Following: with a Two-Man Passenger Seat or with a Full Bench Seat the Back Panel is Completely Void of Covering : CAB SOUND INSULATION Includes Dash and Engine Cover Insulators : CAB, INTERIOR TRIM, CLOSEOUT Lower Dash Closeout Panel; Molded Plastic; Under Instrument Panel Driver Side : CONSOLE, OVERHEAD Molded Plastic; With Dual Storage Pockets with Retainer Nets, CB Radio Pocket, Speakers, and Reading Lights : COURTESY LIGHT (2) Mounted In Front Map Pocket Left and Right Side : DOOR TRIM PANELS with Cloth Insert on Bolster Driver and Passenger Doors : FLOOR COVERING Rubber, Black : GAUGE, TEMPERATURE, AMBIENT Includes Wiring and Sensor With Display Unit Mounted in Cluster : HEADLINER Soft Padded Cloth : INSTRUMENT PANEL TRIM Molded Plastic with Black Center Section

Back to Agenda

Code	Description
	: STORAGE POCKET, DOOR (2) Molded Plastic (Carpet Texture), Full-Length; Driver and Passenger Doors : SUN VISOR (3) Padded Vinyl: 2 Moveable (Front-to-Side) Primary Visors, Driver Side with Vanity Mirror and Toll Ticket Strap, plus 1 Auxiliary Visor (Front Only), Driver Side
16WSK	CAB REAR SUSPENSION Air Bag Type
16XXC	COWL TRAY LID
27DRN	WHEELS, FRONT {Accuride} DISC; 22.5" Painted Steel, 5 Hand Hole, 10-Stud (285.75MM BC) Hub Piloted, Flanged Nut, Metric Mount, 8.25 DC Rims; With .472" Thick Increased Capacity Disc and Steel Hubs
	Includes : PAINT IDENTITY, FRONT WHEELS White
	Notes : Compatible Tire Sizes: 11R22.5, 12R22.5, 255/70R22.5, 255/80R22.5, 265/75R22.5, 275/70R22.5, 275/80R22.5, 295/75R22.5, 295/80R22,5
28DRN	WHEELS, REAR {Accuride} DUAL DISC; 22.5" Painted Steel, 5 Hand Hole, 10-Stud (285.75MM BC) Hub Piloted, Flanged Nut, Metric Mount, 8.25 DC Rims; With .472" Thick Increased Capacity Disc and Steel Hubs
	Includes : PAINT IDENTITY, REAR WHEELS White
	Notes : Compatible Tire Sizes: 11R22.5, 12R22.5, 255/70R22.5, 255/80R22.5, 265/75R22.5, 275/70R22.5, 275/80R22.5, 295/75R22.5, 295/80R22,5
29PAW	PAINT IDENTITY, FRONT WHEELS Disc Front Wheels; With Vendor Applied Gray Powder Coat Paint
29PAX	PAINT IDENTITY, REAR WHEELS Disc Rear Wheels; With Vendor Applied Gray Powder Coat Paint
29WAP	WHEEL GUARDS, FRONT {Accuride} for Metric Hub Piloted Wheels with Flanged Mounting Nuts Mounted Between Hub and Wheel
29WAR	WHEEL GUARDS, REAR {Accuride} for Metric Hub Piloted Wheels with Flanged Mounting Nuts, Mounted Between Hub & Wheel and Between Dual Wheels
7382158102	(4) TIRE, REAR 12R22.5 G622 RSD (GOODYEAR) 482 rev/mile, load range H, 16 ply
7382158107	(2) TIRE, FRONT 12R22.5 G661 HSA (GOODYEAR) 484 rev/mile, load range H, 16 ply
	Services Section:
40107	WARRANTY Standard for WorkStar 7300/7400 (4x2, 4x4, 6x4, 6x6), Effective with Vehicles Built January 2, 2014 or Later, CTS-2002T

Code	Description
40LCP	SRV CONTRACT, EXT ENGINE {Navistar} To 84-Month/100,000 Miles (160,000 km), 3,600 Hours; Includes Engine, Engine Electronics and Injectors; for MaxxForce 9 and Navistar N9 Engines
	Allison 5 Year Extended Warranty

INTERNATIONAL®

Trade Information
2015 7400 SFA 4X2 (SA525)

(US DOLLAR)

August 14, 2014

Description	Price
trk number 49 2004 International plow truck , with front and wing plow 4J094773	30000.00

Total Trade Allowance: $30,000.00

Back to Agenda

INTERNATIONAL®

Financial Summary
2015 7400 SFA 4X2 (SA525)

(US DOLLAR)

August 14, 2014

Description	Price
Net Sales Price:	$61,900.00

Please feel free to contact me regarding these specifications should your interests or needs change. I am confident you will be pleased with the quality and service of an International vehicle.

Approved by Seller:

Official Title and Date

Authorized Signature

This proposal is not binding upon the seller without Seller's Authorized Signature

Accepted by Purchaser:

Firm or Business Name

Authorized Signature and Date

Official Title and Date

The TOPS FET calculation is an estimate for reference purposes only. The seller or retailer is responsible for calculating and reporting/paying appropriate FET to the IRS.

MEMO

TO: **Board of Selectmen**

FROM: **Stephen H. Burns, Interim Town Manager** SHB

DATE: **September 19, 2014**

RE: **FY16 Budget Preparation – Policy Direction**

This is the final regular meeting of the Board of Selectmen before I will start the FY16 budget preparation process. As I mentioned at the September 8th meeting, I would appreciate any policy guidance the Board would be willing to provide so I can share this with the departments, boards and committees that will be making budget requests.

There are two types of policy direction that would be helpful.

First, are there programs or services provided by the Town that the Board feels should be significantly changed? Should a particular budget line be significantly increased, decreased, or even zeroed out? Are there particular things the Board would like to change? For instance, if you think mosquitos are wonderful wild creatures that should be cherished, you might recommend zeroing out the mosquito control budget.

Second, are there fundamental policy themes the Board would like to see reflected in the budget proposals? Here I will offer 3 themes which I think would be worthwhile:

- Improve transparency of government processes
- Provide high quality customer service
- Implement new Comprehensive Plan policies relating to sea level rise preparedness

I offer these examples to get everyone thinking about what might be done this year. Next year (and in years beyond) I think the Board, department heads and Town Manager should engage in a goal-setting process that begins after the May elections and concludes by the end of September 2015 – in time for preparation of the FY17 budget.

Back to Agenda

AGENDA ITEM NUMBER: ____

REQUEST FOR ACTION BY BOARD OF SELECTMEN

Date Submitted: 9/17/2014	**Type of Action:**
Date Action Requested: 9/22/2014	☐ **Procedural** ☒ **Formal Action**
Regular X **Work Session** __	☐ **Other:** _____

Subject: Japanese Knotweed control program bid award.

TO: BOARD OF SELECTMEN

FROM: Dean Lessard, Director of Public Works

RECOMMENDATION: The Department of Public Works recommends that Town of York's existing contractor Municipal Pest Management Services, Inc. be awarded the bid for the Japanese Knotweed control program.

PROPOSED MOTION: I move that the Japanese Knotweed control program be awarded to Municipal Pest Management Services, Inc. in the amount of $7,760.00.

Discussion: The Town of York has used Municipal Pest Management Services, Inc. (aka. Swamp Inc.) for many years to do mosquito spraying and weed control on its sidewalks and curbs. This contract would expand their service to aid the Town in controlling the invasive plant (Japanese Knotweed) that is spreading very quickly along our roadsides.

FISCAL IMPACT: $7,760

DEPARTMENT LINE ITEM ACCOUNT: 100.0303.8001

BALANCE IN LINE ITEM IF APPROVED: $108,635.95

Prepared By: Dean Lessard_____ Reviewed By: _____

Back to Agenda

~~new rules regarding vernal pools under the Maine Natural Resources Protection Act (NRPA). If adopted these new rules could have a significant impact on development review.~~

3. Invasive Species

Invasive species can be plants, animals, insects, and other organisms (e.g., microbes) introduced to areas where they did not exist before. In addition to being transported by birds and mammals through their droppings, invasive species are also spread by human activities, including:

- transporting species between water bodies via watercraft, trailers, and other equipment;
- releasing invasive species into the wild from aquariums, water gardens, research and education projects, and illegal stocking;
- discharging untreated biological waste from aquaculture, seafood or other processing facilities that introduce pathogens and other organisms to marine waters;
- releasing ships' ballast water containing invasive species into marine waters; and
- transporting infested soils to be used for filling construction sites and wetlands.

As of 2003 at least 45 species of invasive plants and animals exist in Maine. The non-native species become naturalized in wetlands, lakes, woods, fields or roadsides. Once introduced, managing and controlling them is a significant challenge. They generally lack predators or other natural controls and can tolerate a wide variety of environmental conditions, which allows them to establish self-sustaining populations easily.

Invasive species threaten Maine's native ecology. They degrade habitat for native plants and animals, choking out native vegetation, diminishing the availability of food plants for wildlife, and altering the behavior of native animals such as pollinators, plant-eating insects and fruit-eating birds. Unchecked, invasion by non-natives could drive some species to extinction. For this reason, invasive plants are a major concern to people who want to protect native species and natural areas. Invasives also cause adverse economic impacts, including the cost of monitoring and control, loss of property value, and loss of tourism dollars due to fishing and water sport restrictions on infested waterbodies.

Most of the information gathered about invasive species in Maine pertains to plant species. However, there are many documented cases of non-native fish infestations degrading Maine's waterbodies and killing off native fish species. Both smallmouth and largemouth bass are widely established in southern Maine, primarily the result of illegal introductions.

The Maine Department of Environmental Protection (DEP) and the Maine Department of Inland Fisheries and Wildlife (IF&W) are currently focusing their

Back to Agenda

prevention, education outreach, and legislative efforts on aquatic invasive species rather than the terrestrial type. Boating activity is the primary way in which plants spread from one water body to another. Plant parts carried on boats, motors, trailers, and fishing gear from an infested water body to one that is not, can lead to disaster. Plants can survive out of the water for days. Once introduced to a water body they can spread rapidly and become a major nuisance. There is no known method of eradicating invasive aquatic plants once they have become established. Maine is now the only state where most of these plants have not been identified. The following aquatic species have been identified as invasive species in Maine:

Aquatic

1. Eurasian water milfoil (*Myriophyllum spicatum*)
2. Variable-leaf water milfoil (*Myriophyllum heterophyllum*)
3. Parrot feather (*Myriophyllum aquaticum*)
4. Water Chestnut (*Trapa natans*)
5. Hydrilla (*Hydrilla verticillata*)
6. Fanwort (*Cabomba caroliniana*)
7. Curly-leaf pondweed (*Potamogeton crispus)*
8. European naiad *(Najas minor)*
9. Brazilian elodea *(Egeria densa)*
10. Frogbit *(Hydrocharis morsus-ranae)*
11. Yellow floating heart *(Nymphoides peltata)*

In addition to their focus on aquatic invasives, the DEP monitors and provides information on three common terrestrial invasive species found in wetlands: Purple Loosestrife, Glossy Buckthorn and Common Reed. The following is a list of invasive plants that present threats to native Maine terrestrial habitats:

Terrestrial

1. Asiatic Bittersweet
2. Autumn Olive / Russian Olive
3. Black Swallowwort
4. Common Reed (Phragmites)
5. Garlic Mustard
6. Glossy Buckthorn
7. Japanese Honeysuckle
8. Japanese Knotweed/Mexican Bamboo
9. Japanese Stilt Grass (Chinese Packing Grass)
10. Lesser Celandine
11. Mile-a-Minute Weed (Devil's Tail, Tearthumb)
12. Multiflora Rose, Rambler Rose
13. Porcelainberry
14. Purple Loosestrife
15. Shrubby Honeysuckles

Back to Agenda

In 1999 the State of Maine enacted Title 38, §419-C regarding prevention of the spread of invasive aquatic plants. This statute addresses the transportation, cultivation, distribution and sale of invasives. In 2001, the State of Maine took additional action and enacted Title 38 §1864. This statute permits the Commissioner of IF&W may issue an emergency order to restrict access to or restrict or prohibit the use of any watercraft on all or a portion of a water body that has a confirmed infestation of an invasive aquatic plant.

The extent of invasive species in York is not currently understood, but certainly there are invasives present at this time. Asiatic Bittersweet, Common Reed, and Purple Loosestrife are widespread. As resources become available, the Town should inventory invasive species occurring in York, and should monitor changes of extent over time.

For more information on invasive aquatic plants regulations see Title 38 §1861-1864 and §1871-1872. Information is also available on the State's Web page, on the IF&W and Maine Natural Areas Program pages.

4. Arthropod-Borne Diseases

There are 3 diseases new to this region that relate to the area's ecosystem. Mosquitoes and ticks transmit these diseases, and management of these vectors will require management of our ecosystem.

a. West Nile Virus (WNV)

West Nile Virus is a mosquito- borne disease that is becoming endemic in North America. It is primarily a bird disease but humans and horses are also at risk. The CDC in Atlanta predicts that WNV will become a permanent component of our landscape. As of January 2005, WNV has been found in every state in the Union and in every Canadian Province. Its distribution each year is unpredictable and can be epidemic even in areas with few mosquito breeding habitats. In 1999, 2000 and 2001 the northeast had numerous epicenters. In 2002, the Midwest fell victim, especially Chicago. In 2003, Colorado had hundreds of human cases and many deaths. Phoenix, Arizona was the hot spot in 2004. The reality of WNV is that it can occur anywhere. WNV appears to explode in dry years with hot summers.

Maine is the only state in the United States not have a documented human case despite been detected annually in birds and mosquitoes. In reality, Maine probably has had non-fatal human WNV cases. Most human cases of WNV are not fatal. Historically, it is persons with weakened immune systems that are at high risk. There is no human vaccine, but a horse vaccine is available.

York and Cumberland counties have high risk factors for WNV. The human population density is higher than the rest of Maine. Many migratory birds pass through coastal wetlands on their northern and southern trips through our area. The prime mosquito vector species for WNV transmission between birds and

Back to Agenda

CONTRACT

Municipal Pest Management Services, Inc.
19 Oak Terrace
Kittery, Maine 03904
Telephone 603/431-0008
Fax 603/431-8588

Date: June 30, 2014
Job Name: Pavement Weed Control
Contract Submitted To: Dean Lessard, Director of Public Works
Contract Submitted By: Michael Morrison

We hereby submit specifications for:
Completing a Japanese knotweed control program for the Town of York during the months of July through October 2014. Rodeo Herbicide will be utilized to control Japanese knotweed and Bohemian knotweed along town roadsides. An initial application will be completed during July/August to all town maintained roadside right of ways. Secondary applications will be completed as needed through October 2014. Based on a recent 2014 survey the majority of larger colonies were found east of 95. Smaller pioneer colonies were found west of 95. The majority of roads in York have Japanese knotweed/Bohemian knotweed presence.

Cost: East of 95 $5,360.00 West of 95 $2,400.00- These costs reflect initial and secondary applications but do not include mowing or cutting.

We propose hereby to furnish material and labor- complete with accordance with above specifications, for the sum of:
Seven thousand seven hundred sixty and 00/100 ($7,760.00)

Payment to be made as follows:
Payment: $7,760.00 due by November 30, 2014

All work to be completed in a workmanlike manner according to specifications submitted, per standard practices. Any alteration or deviation from the above specifications involving extra costs will be executed upon written orders and will become an extra charge over and above the estimate. All agreements contingent upon strikes, accidents or delays beyond our control. Municipal Pest Management Services, Inc. to carry pesticide liability, commercial vehicle and state unemployment insurance. All workers to be covered by workman compensation insurance.

Authorized Signature: *Michael Morrison* Date: June 30, 2014

Contract Acceptance: The above prices, specifications and conditions are satisfactory and hereby accepted. You are authorized to the work as specified. Payment to be made as outlined above.

Signature_____ Date_____

Back to Agenda

AGENDA ITEM NUMBER: ____

REQUEST FOR ACTION BY BOARD OF SELECTMEN

Date Submitted: September 19, 2014	**Type of Action:**
Date Action Requested: September 22, 2014	☐ **Procedural** ☒ **Formal Action**
Regular X **Work Session** __	☐ **Other:** _____
Subject: Request to vacate portions of right-of-way of an undeveloped right-of-way adjacent to Pinecrest Drive.	

TO: **BOARD OF SELECTMEN**

FROM: Stephen H. Burns, Interim Town Manager

RECOMMENDATION: I recommend we set this up for final action at the second meeting in October.

PROPOSED MOTION: I move to direct the Interim Town Manager to complete all required preparatory work so the Board can hear and decide on this matter at its October 27th meeting.

Discussion: The request to vacate this small segment of right-of-way goes back a ways. I've attached some documentation from the people making the request. The owners feel they have been wronged by the Town and are in a hurry. Regardless, we're making progress now. The request seems reasonable because there appears to be no potential for any public use of the right-of-way in question. **Please note the owners requested one of the attached documents be read into the public record at the upcoming meeting.**

I scheduled the public hearing before I heard from the Town Attorney. We notified all property owners within 200' of the old subdivision, and all those within the subdivision. This will allow the Board to hear any issues that neighbors may have. I anticipate at least one person will raise concerns with this request, but that remains to be seen.

Back to Agenda

The Town Attorney subsequently provided the attached memo and documents that describe the process to be followed and the forms to be used. The public hearing being held by the Board is not sufficient on its own. The Town must provide notice to all property owners within the subdivision, and to their mortgage holders, using a specified form. The Planning Board must also receive this notice, though this shouldn't be a problem as the Planning Board has already approved the property boundary change and abandonment of the ROW. In addition to distribution of notice, the Board of Selectmen will be required to decide whether or not to award damages to any property owners within the subdivision.

I spoke with Mary-Anne Szeniawski about the research required for each property and she indicated to me that her staff will not be able to perform this work for two weeks because of the election processes and receipt of tax payments, both of which are at a peak right now. This means we will not be able to accomplish our required work in time for the October 6th Board meeting in two weeks. I propose to have all required advance work completed so the Board may make its decision at its October 27th meeting.

Prepared By: _____ Reviewed By: _____

Back to Agenda

Quick Map

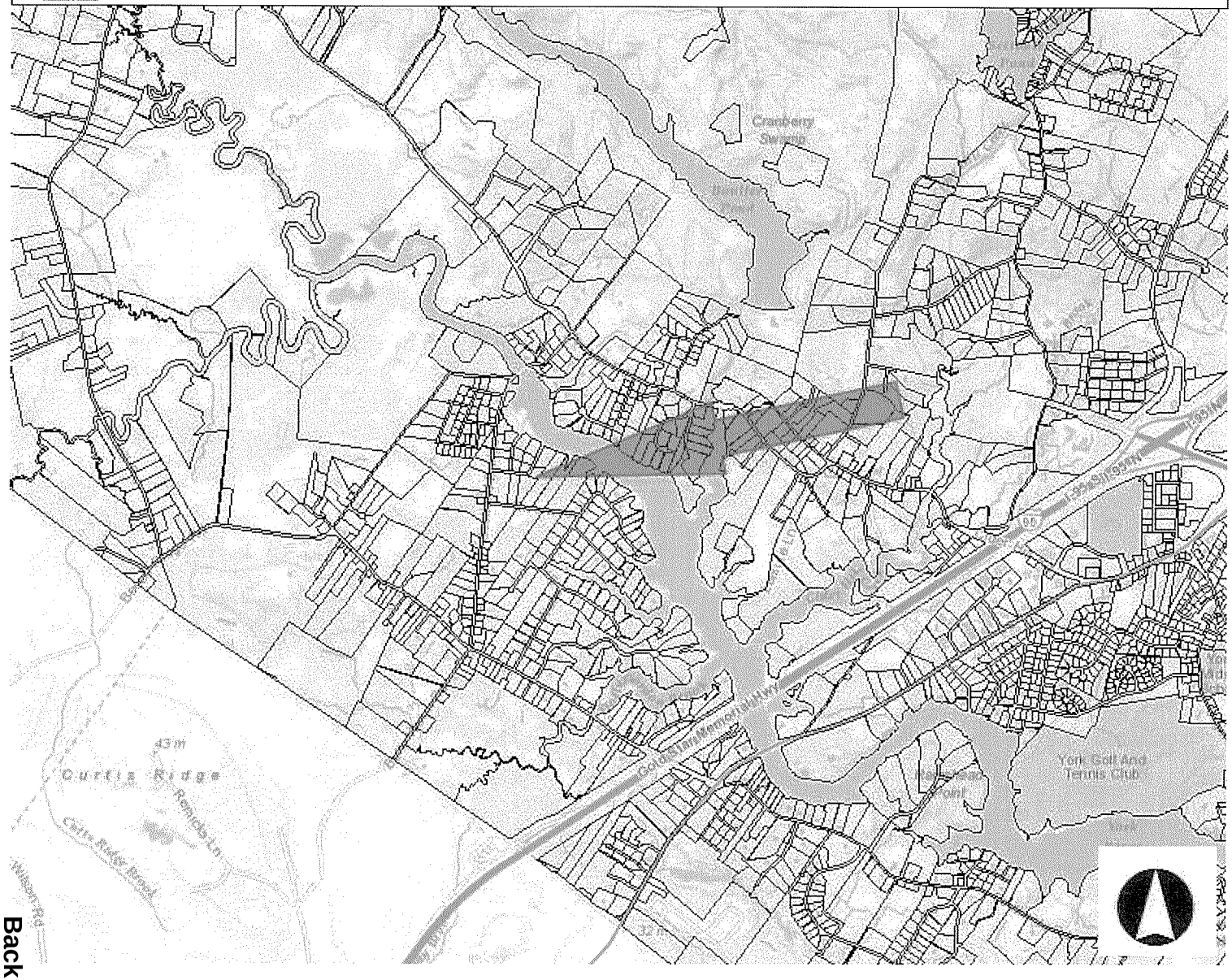

Legend

- Parcels
- Citations

GIS Data Disclaimer-The data contained in this document, or any accompanying document is a resource of general information provided on the World Wide Web for public convenience. The Town of York makes no warranty, representation or guaranty as to the content, sequence, accuracy, timeliness or completeness of any of the database information provided herein. The reader should not rely on the data provided herein. The Town of York expressly disclaims any representations and warranties, including, without limitation, the implied warranties of merchantability and fitness for a particular purpose. This disclaimer can be seen at under the Community Development Department GIS Maps website.

207 774-1200 main
207 774-1127 facsimile
bernsteinshur.com

100 Middle Street
PO Box 9729
Portland, ME 04104-5029

BERNSTEIN SHUR

COUNSELORS AT LAW

Memorandum

To: York Board of Selectmen

Cc: Steve Burns

From: Mary Costigan

Date: September 17, 2014

Re: Vacation of Paper Street

The Town has received a request to vacate a paper street. In order to do so, state law requires that the Town first provide written notice of the proposed vacation to owners of lots on the recorded subdivision plan and their mortgagees of record. The statute contains a form notice which must be mailed to the owners and mortgagees. I have drafted the notice and it is attached. The notice should also be sent to the Planning Board.

Then an order of vacation is filed with the Town Clerk. The Order will specify the amount of damages, if any, to be paid to those having an interest in the way. If the Select Board determines that damages should be paid, the Petitioners (those asking for the vacation) are required to pay the damages. I have drafted an order, which is also attached.

Finally, the vacation order is then recorded in the registry of deeds. The statute provides that "a copy of the order of vacation by the municipal officers entered under section 3027 shall be recorded in the registry of deeds where the plan of subdivision is recorded and shall contain an alphabetical listing of the names of the subdivision lot owners and their mortgagees of record whose interests may be affected by the order." A copy of the recorded order should be sent to the Planning Board and to all owners of lots in the subdivision together with their mortgagees of record.

Notice of Proposed Vacation

From the Municipal Officers of the Town of York, Maine;

A petition has been filed with the Municipal Officers of the Town of York, Maine, proposing to vacate the following Way shown upon a subdivision plan named "Re-Subdivision of Lots Scotland Bridge Road, York, Maine, for Louis P. Fahey," dated July, 1979 and recorded in the York County Registry of Deeds in Plan Book 104, Page3.

Undeveloped Paper Street located through and across Tax Map 209, Lot 192

If the municipal officers enter an order vacating this Way, any person claiming an interest in this Way adverse to the claims of the petitioners must, within one (1) year of the recording of the order, file a written claim thereof under oath in the York County Registry of Deeds and must, within one hundred eighty (180) days of the filing of the claim, commence an action in the Superior Court in York County in accordance with 23 M.R.S.A. § 3027-A.

Dated: _____ __, 2014

By:

_____

_____

_____

_____

_____
Municipal Officers of the Town of York

Back to Agenda

Order of Vacation

TO: Residents of the Town of York, Maine and other interested persons

FROM: Municipal Officers of the Town of York, Maine

The Municipal Officers of the Town of York pursuant to 23 M.R.S.A. § 3027-A hereby order the vacation of the Undeveloped Paper Street located through and across Tax Map 209, Lot 192. The Undeveloped Paper Street is approximately 53'- 56' feet wide and begins at Pinecrest Drive, as shown on a subdivision plan entitled "Re-Subdivision of Lots Scotland Bridge Road, York, Maine, for Louis P. Fahey," dated July, 1979 and prepared by Plato Houliares, (hereinafter, the "Plan"), which Plan is recorded in the York County Registry of Deeds in Plan Book 104, Page 3, and

Having given best practicable notice to all abutting property owners and the local Planning Board, we further order damages to the abutting property owners as follows:

Name: $

Name: $

Name: $

Name: $

Appended hereto and hereby incorporated as Exhibit A to this Order is a list of all the names of the owners of lots shown on said Plan together with their mortgagees of record.

Date: _____ ___, 2014

_____

_____

_____

_____

_____
Municipal Officers

Back to Agenda

ACKNOWLEDGEMENT

STATE OF MAINE
York, ss (County)

Date: _____ __, 2014

Personally appeared the above-named _____ and acknowledged the above instrument to be his/her free act and deed and the free act and deed of the Town of York, Maine.

Before me,

_____
Notary Public/Attorney-At-Law

_____
Print Name

Back to Agenda

09/08/'2014

From: Jorge Lorenas:

TO: York Board of Selectpersons

SUBJECT-Removal of paper street Lot 43 11 Pinecrest Road

I would like to have this document read into the open part of the Selectman's meeting of Sept. 8th.

Back to Agenda

11/29/2013 09/08/2014

Subject: Quick run down on history of lot 43 of Jorge and Ruth Lorenas. 11 Pinecrest

We purchased this lot in 2007 and found that there was a paper road on the property and that we did not have a clear title that would enable us to resell as a building lot, or at some point build a home on the lot. At that time I had Brian Rix approach the town and Brian spoke with Christine and was advised on how to best resolve the problem and have the paper road eliminated and have the lot line changed. Brian was advised that we needed to go to the planning board to have this paper road and a boundary line changed and that would resolve the problem and I would then have a clear title to the property. I proceeded to do this and presented it to the appeals board and on 09/11/2008 the appeals board granted us in writing a document that told us that the lot line had been moved and the paper road eliminated. The document states that it is a Finding of Fact and that a public hearing was duly noted, and in fact the lot line changed and the right of way dissolved.

After I decided to build a home on this lot and after having the right of way eliminated and the lot line changed (09/11/08 FINDING OF FACT AND PLANNING BOARD REMOVAL OF RIGHT OF WAY) I approached the town with the application for a septic system on the lot and it was approved. The location of the septic is on the right of way and the town again approved the septic on the now eliminated supposedly right of way. If the right of way had not been removed the septic system would not have been approved in the current location, again on the right of way that had been eliminated on 09/11/08.

Based on that information and after a few years time I built a home on the property and after the home was completed and put up for sale, and I had a qualified purchase and sale agreement signed by a qualified buyer, the title company and bank said that I did not have a clear title to this land as the town still had a paper road on the property and that I did not have a clear title. The sale was then cancelled and the result was a loss of income from the sale of the property.

At that time I was told that if you could get the original owners (Fahey) to give you a letter granting you ownership of the easement (paper road) that may be enough to release the paper road as they would grant you ownership of that particular portion of the paper road that was on your property. This again was done and recorded in Alfred. The property again come under agreement with a qualified buyer only to be told again that we did not have clear title due to the paper road. Again the sale was lost. This time the attorney advised that the only ones that could make the paper road disappear was the board of Selectmen.

Lloyd Bakke then brought the paperwork to the town managers office asking how to best get this completed. After over two weeks and not hearing from the town he contacted the town managers office to have a copy of what he had left sent back to him. In the meantime Brian Rix also sent an e mail to Christine explaining the same thing that what was needed was a letter from the Selectmen to delete this paper road. Brian did not receive any answer to this e mail until it was brought to her attention again on Nov. 27th when she answered Brian with an e-mail.

Back to Agenda

I do not believe that I need to spend any more money on attempting to have this resolved. I have done everything the town told me to do and I am no closer to resolving this problem. To me it is a very simple solution. You go to the selectmen with this letter along with all of the letters from the attorneys and ask that the paper road that is shown on the deed be deemed null and void and the town releases all rights and claims to the paper road.

The way that I understand this is that when the Planning Board sent me that letter I owned the land free and clear and had a clear title to the property and that the paper road had been eliminated and the property line changed. The town no longer had any claim to this paper road based on the fact finding of the planning board letter dated 09/11/2008.

On May the 19th 2014 the board of selectpersons voted to have the town manager send our request to the town attorney and have the town attorney prepare the proper paperwork for the elimination of the right of way and to bring this information back to the selectmen for final approval and the eventual elimination of the paper street.

After several weeks we attempted to contact the board of selectman chairperson for an update and did not receive any response. After a period of time we attempted to contact the chair and again no response. The last week of September we contacted Mr. Yandow who said he would contact the town attorney and have them expedite this matter and have it on the Sept. 8th selectman's agenda. This did not happen..

By means of this letter we are asking you to expedite this matter and have it resolved in a timely manner as we are losing money each and every day that this property cannot be sold.

Back to Agenda

Town of York Planning Board

Findings of Fact
Jorge & Ruth Larenas
Map/Lot: #0080/0006-F
#11 Pinecrest Drive
Zoning District: GEN-1
Lot Line Adjustment and Right of Way Dissolve

1. **PROJECT DESCRIPTION** – The applicant, Jorge & Ruth Larenas proposes to dissolve an unbuilt right of way on an approved subdivision plan. The applicant has submitted the original 1979 subdivision plan formed by Louis P. Fahey, a site plan detailing the proposed changes to the approved plan dated June 5, 2008, a quitclaim deed dated December 19, 2007, and title research on the road in question.

2. **FINDINGS**- In its review of the application, the Planning Board determined the application was in compliance with the Town's Zoning Ordinance and Site Plan and Subdivision Regulations.

3. **PLANNING BOARD ACTIONS** - At its meeting on September 11, 2008, the Planning Board met with the applicant, determined that the public hearing was duly noted, and conducted a public hearing on the application. The Board determined the application as complete.

4. **PLANNING BOARD DECISION**- At its meeting on September 11, 2008 the Planning Board voted to approve the application.

9/11/08
DATE

Tom Manzi, Chairman, York Planning Board

Back to Agenda

11 Pinecrest Drive
York, ME 03909
April 8, 2014

To: Mr. Ronald Nowell, Chairman
Board of Selectpersons
York, ME 03909

From: Jorge A. Larenas
Ruth A. Larenas

Reference: Selectmen's Meeting May 9, 2014 discussion and possible action on a request to Vacate Town Rights to a paper street right-of-way at 13 Pinecrest Dr., York, ME.

Subject: Clarification of the requested action by the Selectmen on subject property
Attachments: 11 Pinecrest Dr. layout of parcel, Planning Board Findings of Fact dated 9/11/08, Letter reference from American Insurance Company on title insurance.

Dear Mr. Nowell,

The referenced meeting stated that there was a requirement to notify the property owners of the subject subdivision and get their agreement on the elimination of the right-of-way. We do not dispute this as possible action if we were proposing to eliminate their rights to the right-of-way. The request is to only to eliminate the Town of York's rights and interest for the right-of-way.

We are formally requesting that the Town of York Board of Selectpersons sign and grant a Consent Agreement eliminating the ***Town's*** right-of-way to the paper road contained on the lot. This is with the understanding that we own the abutting property of the right-of-way, therefore we own the land on the 50 foot right-of-way. The attached property map shows the paper road and details its layout.

Back to Agenda

What was not explained was my lawyer's investigation and coordination with the title insurance company to have them provide the proper insurance to two potential buyers. It should be noted that there is a third buyer interested in the property and we are anxious to resolve this issue.

The issue is centered on the potential Town's construction as a completed road. The insurance company sees this as a liability of a public way and will not insure it. The following excerpts of their findings are provided below for clarification.

> "The policy does not insure title to the described parcel of land conveyed by deeds. The Parcel is referred to us as undeveloped street at exhibit A hereof, said property appears to be a portion of Pinecrest Drive Depicted on a plan recorded in Plan Book 104 pages. The statue of titles in and to this parcel of land has not been research and will not be ***insured"***

> "As of this date of policy of the land the insured premises is unimproved, therefore this policy does not insure the location of any improvement subsequently constructed."

The insurer advises that the selectmen must make a decision as to the acceptance to vacate this portion of Pinecrest Drive. If they vote to deem it vacated, the seller could then start the process of eliminating the private lot owner's rights-of-way of the subdivision by following Title 23 Section 3033 of the Maine Revised Statues. This process would require a variety of registry work and expenses; further it would likely take a year or more to eliminate the private rights. We do not feel that it is required to have the deeds of the subdivision owners changed to eliminate their access rights to the right-of-way. They can maintain their rights. These will be eliminated in the year 2017 when all dated paper will be extinguished. The issue is only the Town's right to build a road on the property. The concern is the title insurer would have liability for a public road.

You should be advised that in preforming our due diligence we have been advised to take the first step to receive the selectmen's consent agreement. We have consulted with our lawyer, real estate adviser, the former Town of York CEO and a mortgage insurance lawyer.

Back to Agenda

They are in agreement that the most effective action is receiving the selectmen's approval. The town has a legal obligation to resolve the issue since they initiated the actions that supported the building project that is has been delayed years at some cost and frustration.

- The CEO recommended that I receive Planning Board approval changing the lot lines with the abutter adjacent to the right-of-way.
- The Planning Board voted to change the lot line and to dissolve the paper right-of-way. Note the title of the Findings "Lot Line Adjustment and Right of Way Dissolve (Attachment: Minutes and Findings of Fact dated 9-11-2008)
- Based upon the Planning Board's authority, we applied for and received a building permit for the home which was completed in 2011.
- The CEO approved the design and placement of the septic system on the right-of-way.
- We have been unable to sell the house for the past three years due to the paper road problem.
- The attorney for First American Title Insurance Company stated that the Town of York still has the authority to build out the road and they only have the authority to eliminate it.

Without these actions we would not have built the house. The right- of-way was eliminated by the town action.

The property is listed in the *Extended Deadline of Automatic vacation of Proposed but Unaccepted Ways,* dated September 23, 1997. At that time, it was decided by the Town of York Selectmen not to automatically dissolve all paper roads but rather to extend their existence for an additional twenty years, until 2017. This decision was signed by the Board of Selectpersons. We have been advised that the current Board has the authority to reverse that Statue 23, M.R.S.A. 3032 for the subject property.

In summary, we feel that the Town has an obligation to assist us in clearing the title restrictions by eliminating the Town's right to build the road based upon the actions and/or inactions of the CEO and the Planning Board. We were mistakenly misdirected regarding the actions necessary to dissolve the right-of-way in question. The result has resulted in a difficult and expensive hardship for us.

Back to Agenda

We respectfully request that you present this Consent Agreement to dissolve the paper road so the entire Board can take action on our behalf.

Most sincerely,

Jorge A. Larenas Ruth A. Arenas

Cc: Kinley Gregg, Selectmen

Mary Andrews, Selectmen

Scott Fiorentino, Selectmen

Torbert Macdonald, Selectmen

Robert G. Yandow, Town Manager

Steve Burns, Community Development Director

Back to Agenda

SUBJECT LOT 192

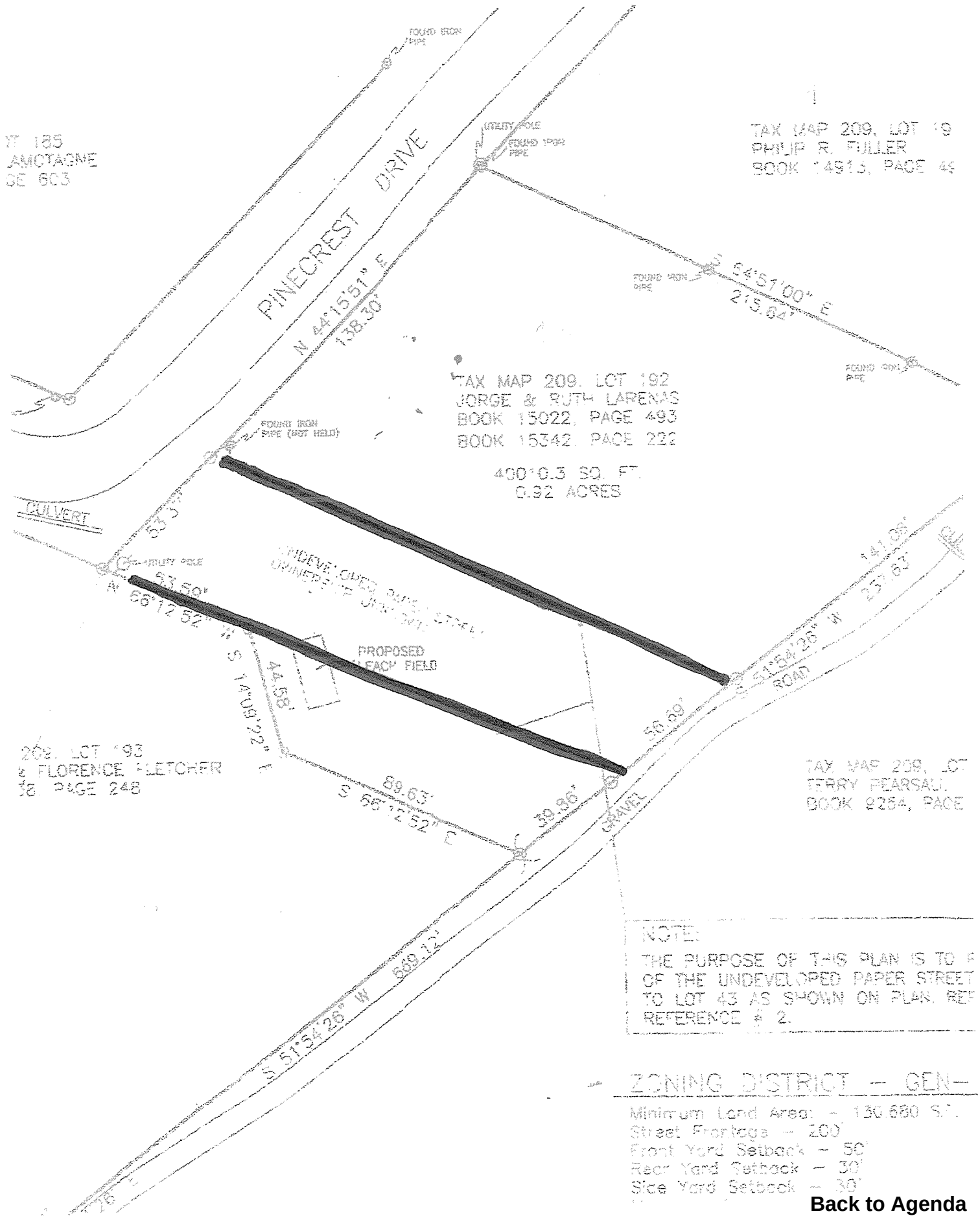

NOTE:
THE PURPOSE OF THIS PLAN IS TO
OF THE UNDEVELOPED PAPER STREET
TO LOT 43 AS SHOWN ON PLAN, REF
REFERENCE # 2.

ZONING DISTRICT – GEN–

Minimum Land Area: – 130,680 S.F.
Street Frontage – 200'
Front Yard Setback – 50'
Rear Yard Setback – 30'
Side Yard Setback – 30'

Back to Agenda

Notice of Public Hearing
Board of Selectmen
Monday, September 22
7:00 PM
York Public Library

The York Board of Selectmen will conduct a Public Hearing on **Monday, September 22, 2014** at **7:00PM** regarding the possible action on a **request to vacate a portion of a right-of-way on Pinecrest Road**. For more information please contact the Town Manager's Office (207) 363-1000.

Sent to advertiser
9/11/2014
MMF

Back to Agenda

Abutter Report

mailed 9/11/14
MMA

Back to Agenda

0080-0006-G
PFIRMAN STEVEN P/KATE M TRUSTEES
7 PINECREST DRIVE
YORK, ME 03909

0080-0006-E
LAMONTAGNE LYNN M/GREGG D
8 PINECREST DRIVE
YORK, ME 03909

0081-0016-A
SEE ASSESSING
12 PINECREST DRIVE
YORK, ME 03909

0086-0041
CARSON BRIAN
PO BOX 251
ELIOT, ME 03903

0080-0006-B
FLETCHER DONALD C/FLORENCE T LIFE
154 WHIPPLE RD
KITTERY, ME 03904

0080-0006-F
LARENAS JORGE A/RUTH A
34 STACY LANE
ELIOT, ME 03903

0081-0016-B
STOTZ ANDREW J/BONNY J
3 ST ANDREWS LANE
YORK, ME 03909

0086-0041-A
PEARSALL ELEANOR M
329 GOODWIN RD
ELIOT, ME 03903

0081-0017
MANTZ COLEBY G
12 ANDREW ST
SALEM, MA 01970

0081-0016
SEE ASSESSING
14 PINECREST DR
YORK, ME 03909

0080-0006-D
HOLMES MICHAEL D/MARIANNE H
6 PINECREST DRIVE
YORK, ME 03909

Back to Agenda

Quick Map

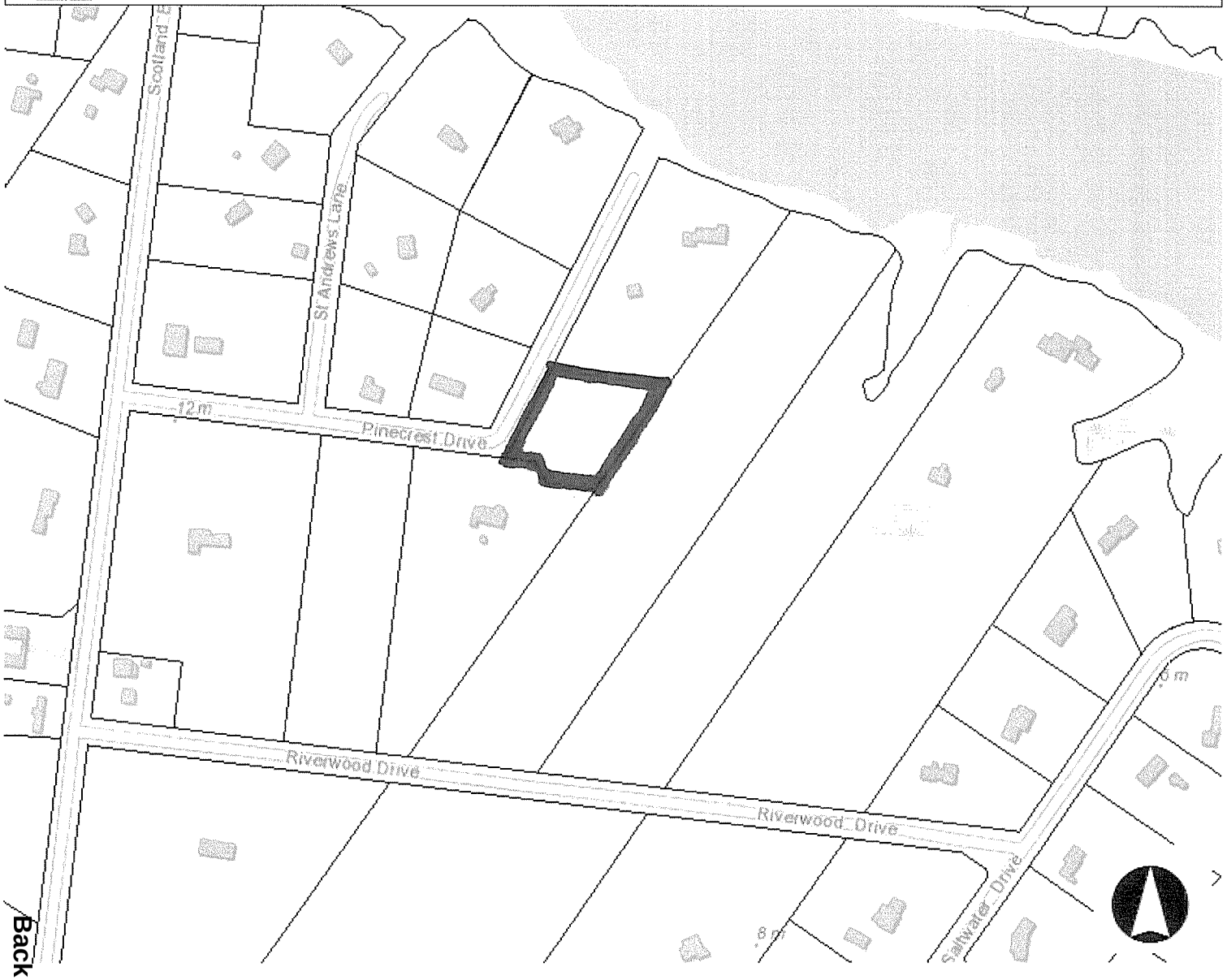

Legend

- Parcels
- Citations

11 Pinecrest

GIS Data Disclaimer-The data contained in this document, or any accompanying document is a resource of general information provided on the World Wide Web for public convenience. The Town of York makes no warranty, representation or guaranty as to the content, sequence, accuracy, timeliness or completeness of any of the database information provided herein. The reader should not rely on the data provided herein. The Town of York expressly disclaims any representations and warranties, including, without limitation, the implied warranties of merchantability and fitness for a particular purpose. This disclaimer can be seen at under the Community Development Department GIS Maps website.

Back to Agenda

AGENDA ITEM NUMBER: ____

REQUEST FOR ACTION BY BOARD OF SELECTMEN

Date Submitted: September 19, 2014	**Type of Action:**
Date Action Requested: September 22, 2014	☐ **Procedural** ☒ **Formal Action**
Regular X **Work Session** __	☐ **Other:** _____
Subject: Request to vacate portions of rights-of-way on Anbelwold Circuit and Intervale Road	

TO: BOARD OF SELECTMEN

FROM: Stephen H. Burns, Interim Town Manager

RECOMMENDATION: I recommend the Board direct the Interim Town Manager to have staff review all paper streets within the York Cliff Improvement Company plan of 1893, and to make a recommendation about possible public interests regarding each of the paper streets in this neighborhood.

PROPOSED MOTION: I move to direct the Interim Town Manager to initiate a review of all paper streets within the York Cliff Improvement Company plan of 1893, and to return to the Board with recommendations about possible public interests with respect to each paper street in this neighborhood.

Discussion: Tax Assessor Rick Mace received the attached request from Rodney Byam and Marjorie Stevens to vacate portions of the road rights-of-way of Intervale Road and Anbelwold Circuit (*copy attached*). These are paper streets, and the adjacent owners are asking the Town to give up all public rights that exist within these paper streets.

I believe it is in the Town's best interest to retain its interests in these paper street segments. This area is immediately adjacent to the cobble beach at Pint Cove on the Atlantic Ocean. While the beach has

Back to Agenda

deeded ownership, I believe there exists a right of other owners in the subdivision have beach access rights. The Town owns property in the old subdivision (20 Wanaque Road) and by virtue of this ownership the Town itself may possess a right of access to the water in the immediate vicinity of these paper streets. Access from the Town's property to Pint Cove would necessarily involve passing along Intervale Road, and perhaps could involve the adjacent section of Anbelwold Circuit. I believe it would be a mistake for the Town to relinquish its rights to these paper streets without giving this further thought.

The York Cliff Improvement Company plan of 1893 includes multiple paper streets, and I believe it makes sense to use this as our first example about dealing with paper streets. At a staff and Board level, we can use this example to blueprint our procedures for addressing all our many paper streets.

Prepared By: _____ Reviewed By: _____

Back to Agenda

Quick Map

Legend

- Parcels
- Citations

GIS Data Disclaimer-The data contained in this document, or any accompanying document is a resource of general information provided on the World Wide Web for public convenience. The Town of York makes no warranty, representation or guaranty as to the content, sequence, accuracy, timeliness or completeness of any of the database information provided herein. The reader should not rely on the data provided herein. The Town of York expressly disclaims any representations and warranties, including, without limitation, the implied warranties of merchantability and fitness for a particular purpose. This disclaimer can be seen at under the Community Development Department GIS Maps website.

Back to Agenda

Rick Mace
Tax Assessor
Town of York, Maine

August 26, 2014

Re: Paper Roads, Vacated

We live at 14 Anbelwold Circuit (lots 58 and 52 per the York Cliffs Improvement Co map of 1893) and there are two sections of two paper roads that boarder our property: Intervale Road and Anbelwold Circuit.

Section of Anbelwold Circuit:
We would like the town to vacate the undeveloped section of Anbelwold Circuit that boarders our property. This section of Anbelwold Circuit runs from the detached garage of 15 Anbelwold Circuit to where it intersects with another undeveloped portion of Intervale Road. We currently own the properties on both sides of this undeveloped section (14 Anbelwold Circuit and that portion of Private Parkland on the ocean side of this section of Anbelwold, to be addressed as 17 Anbelwold Circuit at a future date).

Section of Intervale Road:
We would also like the town to vacate the undeveloped section of Intervale Road that boarders our property. This section of Intervale Road runs from the undeveloped section of Pequanac Place to and through where Intervale Road intersects with Anbelwold Circuit.

The sections of the area referenced is highlight in yellow on the attached map.

Thanks

Rodney W. Byam

Marjorie A. Stevens

Back to Agenda

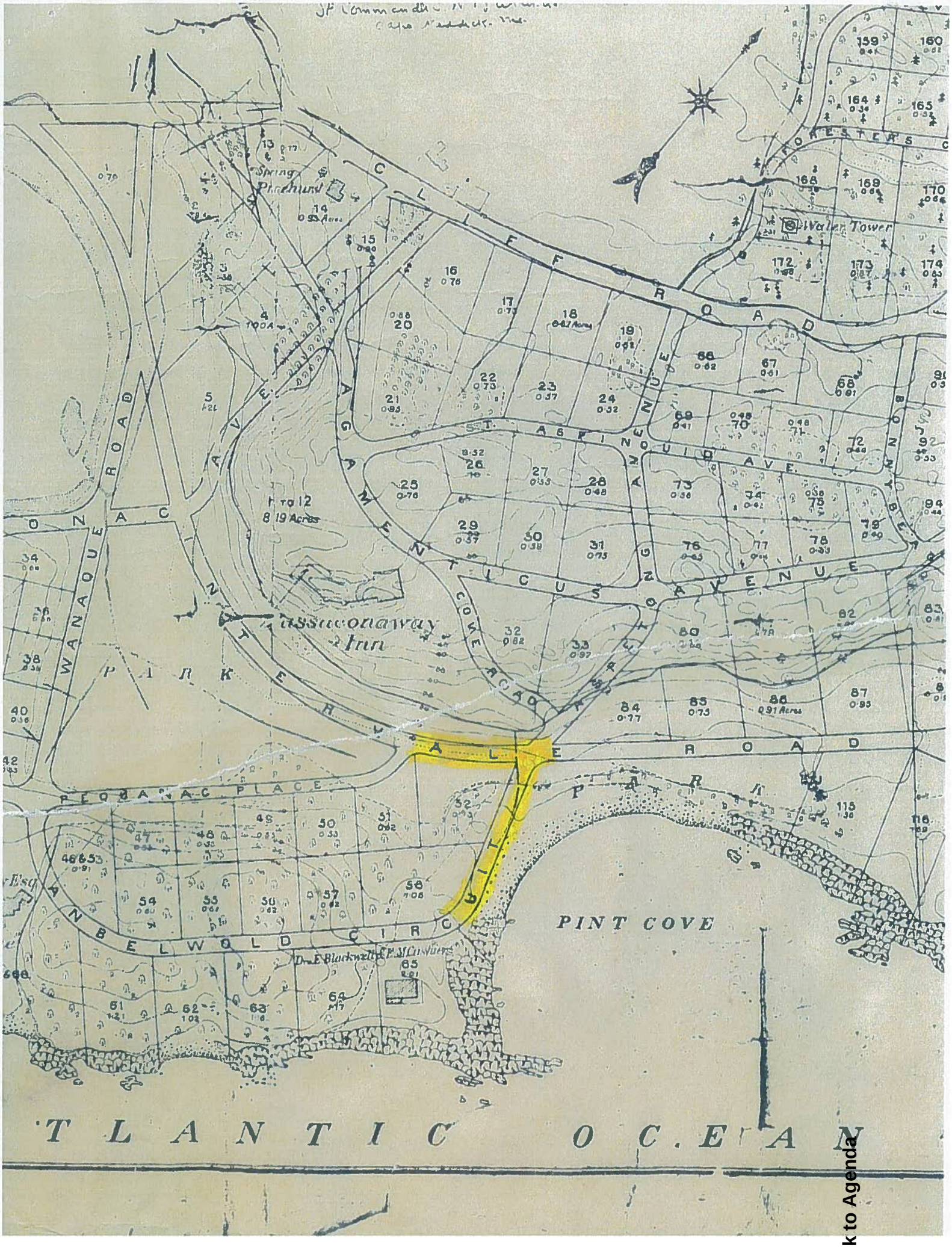
CLIFF ROAD
FORESTERS
Spring Prichurst
Water Tower
AGAMENTICUS AVENUE
ST. ASPINQUID AVE.
BONNYBEAR
WANAQUE ROAD
INTERVALE ROAD
Passaconaway Inn
PARK
COVE ROAD
PEQUANAC PLACE
ANBELWOLD CIRCUIT
PINT COVE
TLANTIC OCEAN

k to Agenda

Municipal Building Committee – Committee Charter

DRAFT – September 19, 2014

Ad Hoc Committee. The Municipal Building Committee is an ad hoc committee created by and answerable to the Board of Selectmen. It shall operate until completion of the new Police Station and Connector Road between Ridge Road and Route One, or until terminated by vote of the Board of Selectmen.

Membership. The Committee shall be comprised of 7 voting members, which shall include 5 at-large members appointed by the Board of Selectmen, one member of the Budget Committee appointed by the Budget Committee, and one member of the Board of Selectmen appointed by the Board of Selectmen. A quorum for purposes of voting shall require a minimum of 4 members present and voting, and decisions shall be by majority vote.

Scope of Responsibilities. The Committee shall advise the Board of Selectmen with respect to completion of two construction projects, the Police Station Project and the Connector Road Project, and with respect to related matters (such as implementation of work associated with the agreement with Mr. Cragin) as are required to complete these two projects. Further, the Committee shall supervise construction of the Police Station as required by the Town of York Home Rule Charter.

Project Goal. It is the goal of the Town to complete the Police Station and Connector Road projects successfully, within approved budgets, in a manner that results in full compliance with all applicable laws. Within this overall goal, there are two objectives listed in the order of importance:

> **Objective #1.** The first goal of the Committee is to help ensure completion of a new Police Station, communications tower, and the connector road to Ridge Road. Success will be determined by receipt of an Occupancy Permit for the building, establishment of a new communications system, satisfaction of the Maine DEP and US Army Corps of Engineers with regard to correction of past violations, and completion of all related matters located easterly of road station 33+50 (just past the end of the sewer line), including the property exchange with Mr. Cragin.
>
> **Objective #2.** The second goal of the Committee is to help ensure completion of a new connector road from the Police Station westerly to Route One. Success will be determined by the opening of a road to the public between Ridge Road and Route One, and completion of all related matters located westerly of road station 33+50.

Back to Agenda

Duties. The Committee shall:

1. Become familiar with the plans, permits, approvals and past violations associated with this project.
2. Develop an understanding of the project budgets and project costs.
3. Advise the Board of Selectmen through the process of getting the projects under contract, and as necessary, recommend to the Board of Selectmen modifications necessary to complete the projects within the limits of approved budgets.
4. Serve as the Town's liaison with the design consultants.
5. Solicit any decisions of the Board necessary to successfully complete the projects. At a minimum, the Board of Selectmen shall be required to approve in advance:
    a. Submittal of an application for a building permit for the Police Station and accessory buildings.
    b. Submittal of an application for a building permit for the Police Station Communications Tower, and for any subsequent telecommunications co-locations on this tower.
    c. Submittal to any local, state or federal entity for a permit or approval, or modification of a permit or approval.
6. Implement the decisions of the Board of Selectmen with regard to these projects.
7. Supervise the clerk of the works with regard to construction of the Police Station buildings and site.
8. Supervise the person or firm that monitors construction of the connector road.
9. At least once a month, report to the Board of Selectmen about the physical and budget status of each project.

Modification of Committee Charter. Any time after the formation, the Committee may propose to the Board of Selectmen any modification of its Charter believed necessary to enhance the ability to achieve the above-stated project goal. The Board of Selectmen may accept, modify or reject proposed changes.

DRAFT

Back to Agenda

AGENDA ITEM NUMBER: ____

REQUEST FOR ACTION BY BOARD OF SELECTMEN

Date Submitted: 9/19/2014	**Type of Action:**
Date Action Requested: 9/22/2014	☐ **Procedural** ☐ **Formal Action**
Regular X **Work Session** __	☒ **Other:** _Discussion_____
Subject: Proposed Beach Access Road Municipal Partnership Initiative (MPI) Grant Application.	

TO: BOARD OF SELECTMEN

FROM: Dean Lessard, Director of Public Works

RECOMMENDATION: to approve the DPW to submit a 2015 grant application for York Beach Access Road improvements and to continue to work with Maine DOT to secure funds through the Municipal Partnership Initiative (MPI) grant program.

PROPOSED MOTION: I move to approve the submittal of a 2015 grant application to Maine DOT's Municipal Partnership Initiative Program (MPI) in order to secure funds for York Beach Access Road improvements.

Discussion:

The ballot project history is as follows:

- On May 29, 2009 the voters approved up to $2,000,000 to fund the acquisition of land for a new Public Safety Building.
- On May 22, 2010 the voters approved $200,000 to fund the engineering and site design work on potential Public Safety Land.
- On May 21, 2011 the voters approved $1,626,882 for the design and construction of the proposed Route 1 – York Beach Connector Road.
- On May 18, 2013 the voters did not approve the appropriation of $525,000 for a Traffic Signal and Road improvements on Route 1 at the proposed police station connector Road.

Back to Agenda

DPW has also spoken with the Maine Department of Transportation (MDOT) about the possibility and applicability of state funding through a Municipal Partnership Initiative (MPI) grant.

Included with the selectmen's action form are the proposed 2015 application for the Project, an aerial plan with a preliminary design that outlines the project limits and an engineer's estimate for the proposed new road improvements.

FISCAL IMPACT: $500,000
DEPARTMENT LINE ITEM ACCOUNTS:
BALANCE IN LINE ITEM IF APPROVED: $500,000

Prepared By: _____ Reviewed By: _____

Back to Agenda

September ___, 2014

Mr. Kyle Hall
Regional Engineer
Maine Department of Transportation
Southern Region – Region 1
51 Pleasant Hill Road
Scarborough, Maine 04070-0358

Dear Mr. Hall:

The Town of York is hereby requesting consideration to be included in the MaineDOT's Municipal Partnership Initiative, to support a roadway improvement project on U.S. Route 1, in York.

The project involves construction of a new access road from U.S. Route 1 to York Beach. The project will alleviate traffic congestion on other State roads (Route 1A / Cape Neddick Road and Route 1A / York Street), allowing for safer accessibility by providing a signalized intersection at Route 1.

The Municipal Guide has been reviewed and responses to the individual details and criteria are provided in the attached fact sheet.

Your consideration and assistance in this project would be greatly appreciated.

Sincerely,

Dean Lessard, P.E.
Director, Department of Public Works

Back to Agenda

Town of York – U.S. Route 1 – New Signalized Intersection (New Town Connector Road)
MPI Grant Proposal Fact Sheet

***Professional Engineer Certified*:**

The project was designed by SMRT, Inc., and Gorrill-Palmer Consulting Engineers, Inc. Plans are attached.

10-Year Useful Life:

This project includes new construction; useful life will far exceed 10 years. Pavement life expected is 20 years.

Deliverability:

Plans have been completed and approved by Planning Board. Permits have been approved and construction is anticipated in Fall, 2014.

Public Involvement:

The project was approved by voters in _____ to construct the access road. York Selectmen and Planning Board have held numerous public hearings for discussion of this project.

Betterment to the State Transportation System:

The project provides better accessibility to York Beach and reduced traffic on other State roads (Route 1A / Cape Neddick Road and Route 1A / York Street)

***Multiple Party Agreements*:**

The Town will be the only party to the State agreement, and is willing to enter into agreements that the amount is capped.

Right-of-Way Acquisition:

The Town has purchased all of the land required for the construction of this project.

Back to Agenda

Project Selection Factors

Safety:

This project addresses a number of safety issues:

- Intersection improvements: This project will include a signalized intersection at Route 1, which will provide a safer condition for travelers, vs. the existing stop-controlled intersection at Route 1 and Route 1A (Cape Neddick Road) to the north.
- Traffic congestion: This project reduces traffic on other State roads, which will improve mobility, but will also increase safety on these routes by reducing vehicular conflicts.
- Pedestrian/bicycle accessibility: The project provides a dedicated bicycle and pedestrian trail to York Beach, via a widened sidewalk along the new access road. Several other routes to the beach do not have pedestrian or bicycle facilities.

Economic Development and Job Creation:

This project will provide improved bicycle / pedestrian access and traffic efficiency, as well as improve accessibility to Short Sands Beach. This will create a more desirable tourist destination, which will help existing businesses, and promote new business in the immediate vicinity. Development of the access road will provide opportunities for additional parking and connectivity of new parcels for development and linkage to York Beach. The project will also allow for the incorporation of access points for the York Trolley, adjacent to more parking areas, to increase visitor accessibility to York Beach. In addition, it will create jobs for local contractors assisting the Town with construction.

Degree of Betterment:

This project will reduce traffic volumes on other State routes, to increase safety and service life of those roads, and improve safety at U.S. Route 1 access points to the beach. In addition, this project will provide additional capacity to safely evacuate beach areas during emergencies.

Percentage of Local Match:

Access Road Construction (Warrant #__, May ???)_	$1,860,000	Local Match
U.S. Route 1 Signalized Intersection	$500,000	MPI funding
Total Project Cost:	$2,360,000	

Proposed Percentage of Local Match = _____

Record of Requests:

This is a new project and request.

Back to Agenda

Customer Benefit:

There is a huge benefit for the residents, business owners and visitors to the Town of York. Construction of the new roadway, with bicycle and pedestrian improvements, will create a better flow of pedestrian and vehicular traffic to the beach; improve safety at U.S. Route 1; and promote additional tourism by increasing public facilities. The Town has the opportunity to link additional facilities on Town-owned land at the new connector road to the beach facilities, as well. In conclusion, the proposed project will improve safety and encourage growth in the Short Sands Beach area.

Prior MPI Awards:

Route 1A Improvements (York Village) – 2012, Completed
Route 1A Improvements (York, Short Sands Beach) – 2011, Completed
Route 1A Improvements (York, Long Sands Beach) – approved, 2014

Back to Agenda

GENERAL NOTES:

1. SEE SHEET C-001 FOR LEGEND AND GENERAL NOTES.

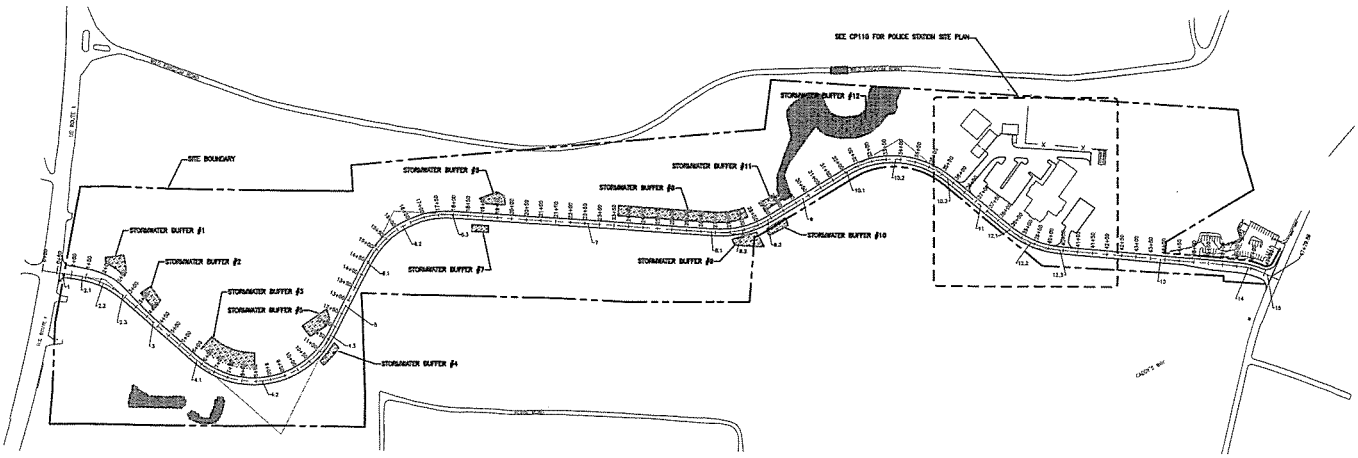

E1 ROAD GEOMETRY PLAN - SEE CP106 FOR INTERSECTIONS, SEE CP107 FOR CURVE SUPEREVEVATION DATA

SCALE 1" = 150'

Town of York Police Department - Connector Road Horizontal Geometry

Date	5/16/2014	Revision	0																					
No.	Number	Type	Length	Rot'n	Elevation	Start Station	End Station	Curve Length	Chord Length	Chord Direction	Spiral Definition	Spiral Type	Radius in	Radius out	Start Direction	End Direction	BPI Northing	BPI Easting	PI Northing	PI Easting	Axial Point Northing	Axial Point Easting	Max Deflection	PI Station	PI Point
1	1	Line	16.42'		S 64° 30'E	0+00.00'	0+16.42'																		
2.1	2	Spiral-Curve-Spiral	75.00'			0+16.42'	0+91.42'	8.07' (S)			Clothoid	Simple	infinity	200.00'	S 64° 30'E	S 68° 30'E	1+08.36'	33+72.94'	2020407.81'	1202025.79'	2020341.37'		
2.2	2	Spiral-Curve-Spiral	94.80'	30.00'		1+00.42'	2+95.22'	10.20' (S)	94.64'	S 64° 30'E						S 68° 30'E	S 07° 30'E						4.10	2+10.28'	2020404.90' 1202092.90'
2.3	3	Spiral-Curve-Spiral	75.00'			2+95.22'	3+68.22'	8.07' (S)			Clothoid	Simple	200.00'	infinity	S 68° 30'E	S 07° 30'E	2+68.08'	1202068.34'	2020398.72'	1202132.72'	2020398.37'		
3	3	Line	54.44'		S 07° 30'E	3+68.22'	4+22.66'																		
4.1	4	Spiral-Curve-Spiral	75.00'			4+22.66'	4+97.66'	8.07' (S)			Clothoid	Simple	infinity	200.00'	S 07° 30'E	S 03° 30'E	4+05.44'	1202405.39'	2020139.64'	1202202.80'	2020202.80'		
4.2	4	Spiral-Curve-Spiral	474.50'	30.00'		4+97.66'	9+72.16'	50.93' (S)	426.49'	S 03° 30'E						S 03° 30'E	N 86° 30'E						36.35	9+40.85'	2020404.88' 1202206.70'
4.3	4	Spiral-Curve-Spiral	75.00'			9+72.16'	10+47.16'	8.07' (S)			Clothoid	Simple	200.00'	infinity	N 86° 30'E	N 86° 30'E	9+64.44'	1202152.07'	2020139.80'	1202136.30'	2020137.80'			
4.4	4	Line	192.50		N 86° 30'E	10+47.16'	14+12.67'																		
4.5	4	Spiral-Curve-Spiral	75.00'			14+12.67'	14+87.67'	8.07' (S)			Clothoid	Simple	infinity	200.00'	N 86° 30'E	S 68° 30'E	14+68.77'	1202402.24'	2020416.37'	1202404.27'	2020417.87'			
4.6	4	Spiral-Curve-Spiral	217.22'	30.00'		14+87.67'	17+10.28'	23.34' (S)	217.18'	S 64° 30'E						S 68° 30'E	S 07° 30'E						3.48	16+52.48'	2020675.30' 1202637.20'
4.7	4	Spiral-Curve-Spiral	75.00'			17+10.28'	18+85.28'	8.07' (S)			Clothoid	Simple	200.00'	infinity	S 07° 30'E	S 07° 30'E	17+94.66'	1202946.49'	2020728.87'	1202824.37'	2020827.37'			
4.8	4	Line	401.80'		S 07° 30'E	18+85.28'	22+87.08'																		
4.9	4	Spiral-Curve-Spiral	75.00'			22+87.08'	23+62.08'	8.07' (S)			Clothoid	Simple	infinity	200.00'	S 07° 30'E	S 03° 30'E	23+13.08'	1202913.77'	2021184.04'	1202884.37'	2021183.87'			
4.10	4	Spiral-Curve-Spiral	173.70'	30.00'		23+62.08'	25+35.78'	19.34' (S)	172.12'	N 64° 30'E						S 03° 30'E	N 03° 30'E						2.29	24+48.27'	2021172.41' 1202847.80'
4.11	4	Spiral-Curve-Spiral	75.00'			25+35.78'	26+10.78'	8.07' (S)			Clothoid	Simple	200.00'	infinity	N 03° 30'E	N 03° 30'E	25+73.48'	1202273.31'	2021512.59'	1202819.30'	2021813.80'			
5	5	Line	241.80'		S 86° 30'E	26+10.78'	28+52.58'																		
5.1	10	Spiral-Curve-Spiral	75.00'			31+42.80'	32+17.80'	8.07' (S)			Clothoid	Simple	infinity	200.00'	S 86° 30'E	S 80° 30'E	32+17.38'	1202017.22'	2021841.07'	1202416.27'	2021812.37'			
5.2	10	Spiral-Curve-Spiral	81.40'	300.00'		32+17.80'	32+99.20'	27.07' (S)	300.00'	S 80° 30'E						S 80° 30'E	S 02° 30'E						2.07	32+58.48'	2021827.70' 1201716.10'
5.3	10	Spiral-Curve-Spiral	75.00'			32+99.20'	33+74.20'	8.07' (S)			Clothoid	Simple	200.00'	infinity	S 02° 30'E	S 02° 30'E	33+47.48'	1202039.20'	2020746.20'	1201616.37'	2020812.87'			
6	11	Line	263.31'		S 02° 30'E	33+74.20'	36+37.51'																		
6.1	12	Spiral-Curve-Spiral	75.00'			36+37.51'	37+12.51'	8.07' (S)			Clothoid	Simple	infinity	200.00'	S 02° 30'E	S 02° 30'E	36+86.02'	1202086.02'	2020298.89'	1201786.87'	2020298.38'			
6.2	12	Spiral-Curve-Spiral	112.40'	200.00'		37+12.51'	38+62.32'	27.07' (S)	110.91'	S 02° 30'E						S 02° 30'E	S 02° 30'E						0.37	38+44.17'	2020296.38' 1201673.20'
6.3	12	Spiral-Curve-Spiral	75.00'			38+62.32'	39+37.32'	8.07' (S)			Clothoid	Simple	200.00'	infinity	S 02° 30'E	S 02° 30'E	39+11.02'	1202079.22'	2020062.37'	1201786.87'	2020098.88'			
7	13	Line	204.80'	S 02° 30'E		39+37.32'	41+42.12'																		
7.1	14	Curve	96.72'		S 42° 30'E	41+42.12'	42+38.84'	16.16 (R)	96.60'	S 42° 47'E						S 82° 13'E	S 07° 03'E						4.58	42+21.27'	2020041.02' 1201645.20'
8	15	Line	28.60'		S 07° 03'E	42+38.84'	42+67.44'																		

A1 ROAD HORIZONTAL GEOMETRY TABLE

Town of York Police Department - Connector Road Vertical Geometry

Date	5/16/2014	Revision	0							
No.	PVI Station	PVI Elevation	Grade In	Grade Out	A	Curve Type	Sub-Curve Type	Curve Length	K Value	Curve Radius
1	0+00.00'	52.40'		-2.00%						
2	1+00.00'	50.00'	-2.00%	-5.00%	3.00%	Crest	Symmetric Parabola	72.24'	24	1200.00'
3	1+25.00'	48.00'	-5.00%	1.00%	6.00%	Sag	Symmetric Parabola	203.99'	67	3403.00'
4	2+00.00'	48.50'	1.00%	-4.00%	5.00%	Crest	Symmetric Parabola	114.35'	23	2300.00'
5	3+00.00'	44.50'	-4.00%	1.00%	5.00%	Sag	Symmetric Parabola	203.34'	41	4103.00'
6	3+175.00'	46.62'	1.17%	5.00%	4.24%	Sag	Symmetric Parabola	116.72'	27	2702.00'
7	4+00.00'	51.00'	5.00%	-1.00%	6.00%	Crest	Symmetric Parabola	173.54'	29	2900.00'
8	5+50.00'	49.50'	-1.00%	-6.00%	5.00%	Crest	Symmetric Parabola	83.50'	16	1600.00'
9	6+00.00'	46.50'	-6.00%	-0.83%	5.17%	Sag	Symmetric Parabola	189.54'	37	3703.00'
10	7+50.00'	45.00'	-0.83%	3.33%	4.17%	Sag	Symmetric Parabola	180.02'	37	3702.00'
11	8+00.00'	46.67'	3.33%	-2.00%	5.33%	Crest	Symmetric Parabola	130.27'	39	3900.00'
12	9+75.00'	42.00'	-2.00%	2.20%	4.20%	Sag	Symmetric Parabola	120.20'	57	5702.00'
13	10+25.00'	43.09'	2.20%	-1.51%	3.83%	Crest	Symmetric Parabola	72.42'	19	1900.00'
14	10+65.00'	42.52'	-1.51%	-2.00%	0.49%	Crest	Symmetric Parabola	50.00'	102.13	10205.00'
15	11+00.00'	41.50'	-2.00%	0.67%	2.67%	Sag	Symmetric Parabola	66.37'	37	3702.00'
16	11+65.00'	42.10'	1.37%							

A11 ROAD VERTICAL GEOMETRY TABLE

date _____ signature _____ CHAIR

144 Fore Street/P.O. Box 415
Portland, Maine 04104
tel. (207) 772-3846
fax. (207) 772-1019
www.smpdi.com

ARCHITECTURE
ENGINEERING
PLANNING
INTERIOR DESIGN
CONSULTING

YORK POLICE DEPARTMENT
1051 US ROUTE 1
YORK, MAINE

ISSUED FOR FINAL REVIEW
6-05-14

CURRENT SCALE: 1" = 150'

No.	Date	Revision
1	4-25-14	ISSUED FOR FINAL REVIEW
2	4-15-14	ISSUED FOR PRELIMINARY REVIEW
3	4-11-14	ISSUED FOR PRELIMINARY REVIEW

GRAPHIC SCALE: 0' 1'

SCALE: 1" = 150'
PROJECT MANAGER: CHD
JC/DRAWN BY: WCM
A/E OF RECORD: SMPDI
CAD FILE: CP101-C6122
PROJECT NO: C6122
DATE:
SHEET TITLE: ROAD GEOMETRY PLAN
SHEET No. CP101

PROGRESS PRINT

Back to Agenda

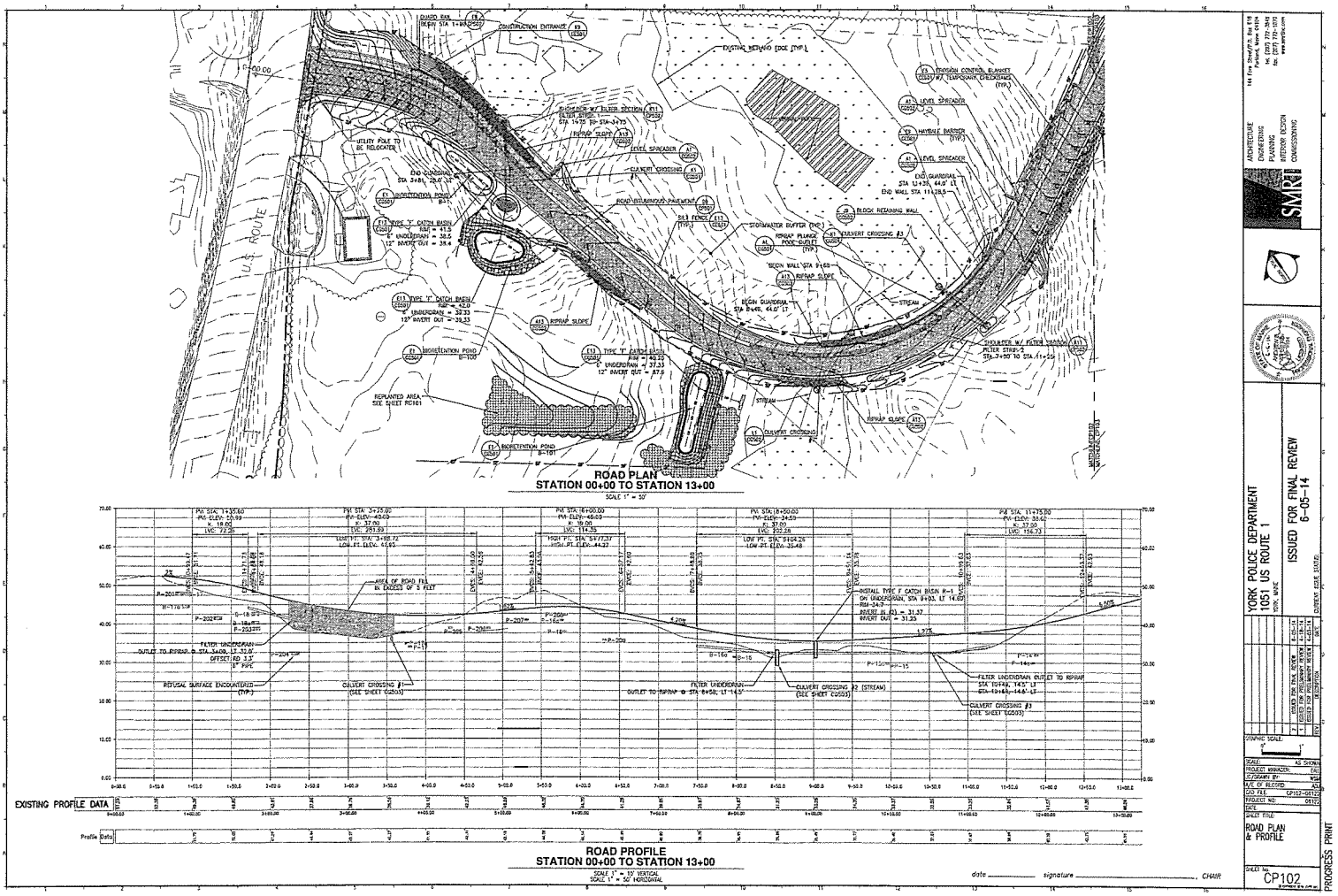

Back to Agenda

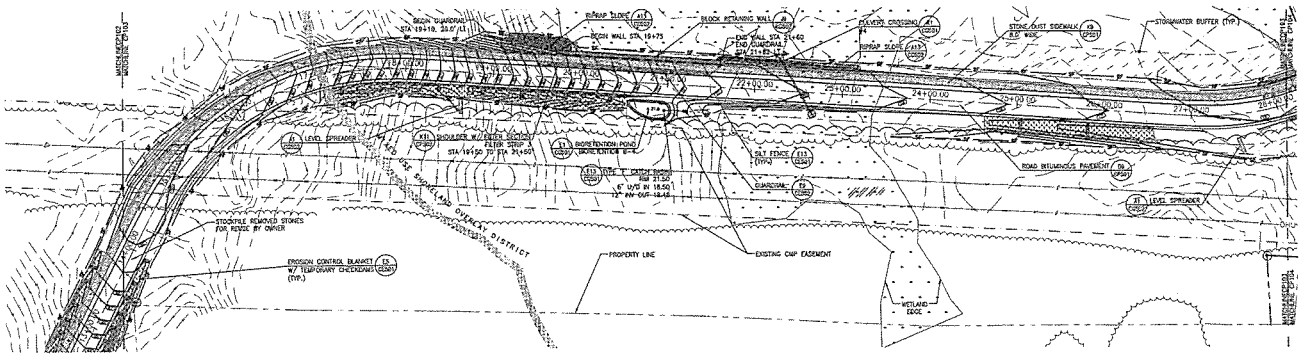

ROAD PLAN
STATION 13+00 TO STATION 27+50
SCALE 1" = 50'

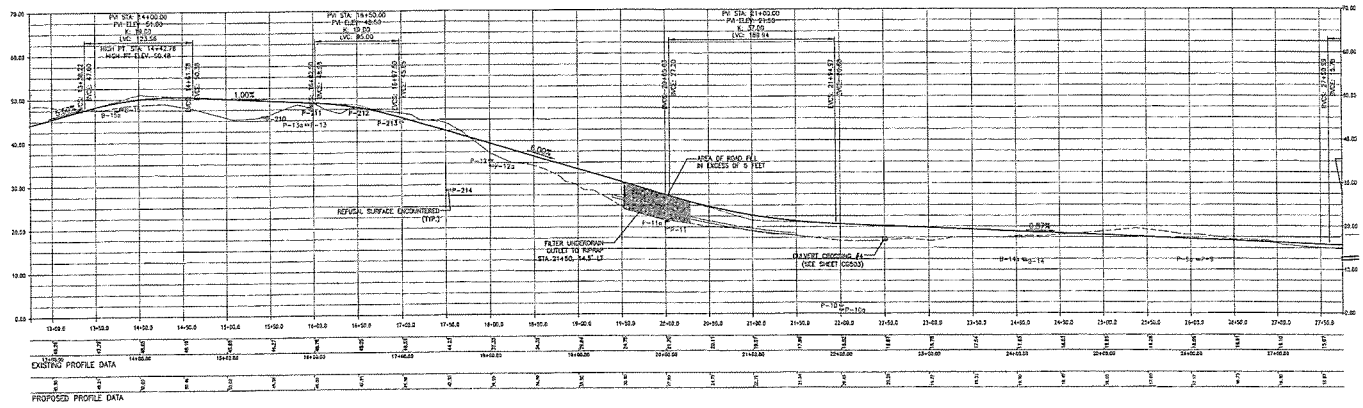

ROAD PROFILE
STATION 13+00 TO STATION 27+50
SCALE 1" = 10' VERTICAL
SCALE 1" = 50' HORIZONTAL

date _____ signature _____, CHAIR

144 Fore Street/P.O. Box 1519
Portland, Maine 04104-5009
tel. (207) 772-3846
fax. (207) 772-1029
www.smrt.com

ARCHITECTURE
ENGINEERING
PLANNING
INTERIOR DESIGN
CONSTRUCTION MANAGEMENT

SMRT

YORK POLICE DEPARTMENT
1051 US ROUTE 1
YORK, MAINE

ISSUED FOR FINAL REVIEW
6-05-14

CERTIFICATE OF DESIGN STANDARD

REV.	DESCRIPTION	DATE
1	ISSUED FOR FINAL REVIEW	6-05-14
0	ISSUED FOR PRELIMINARY REVIEW	4-18-14

DRAWING SCALE: 1" 0" 1"

SCALE: AS SHOWN
PROJECT MANAGER: DRL
CLRDWN BY: KSM
QA OF RECORD: ASL
CAD FILE: CP103-061103
PROJECT NO.: 54132
DATE:
SHEET TITLE: ROAD PLAN & PROFILE

SHEET NO. CP103

PROGRESS PRINT

Back to Agenda

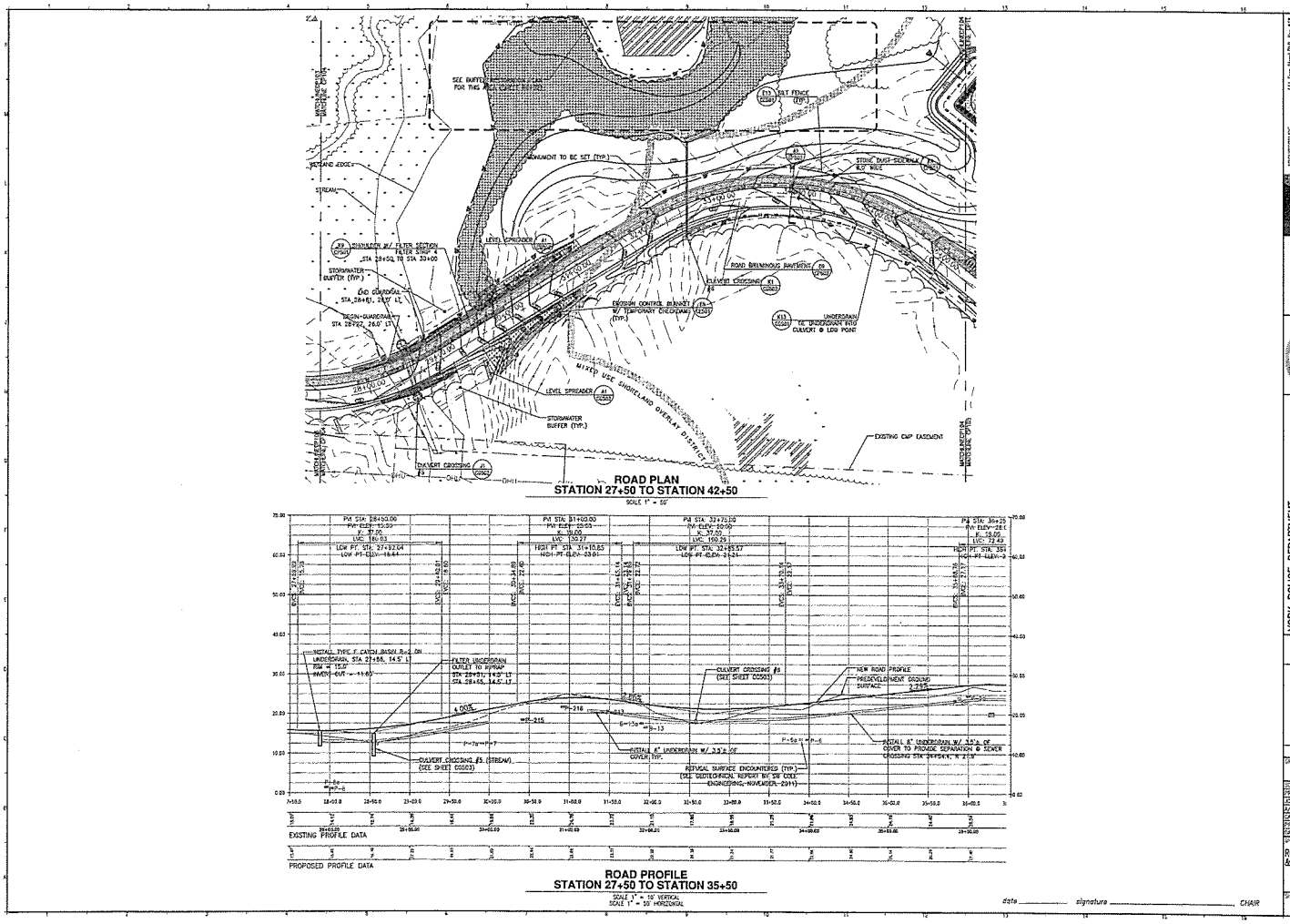

Back to Agenda

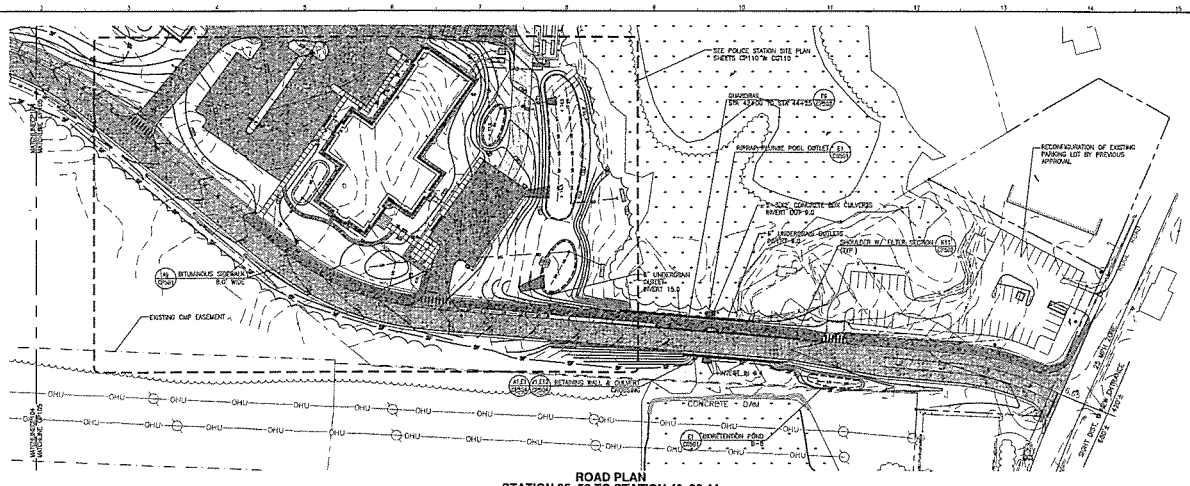

ROAD PLAN
STATION 35+50 TO STATION 48+06.44

SCALE 1" = 50'

NOTE: SEE UTILITY PLAN & PROFILE SHEETS FOR WATER AND SEWER.

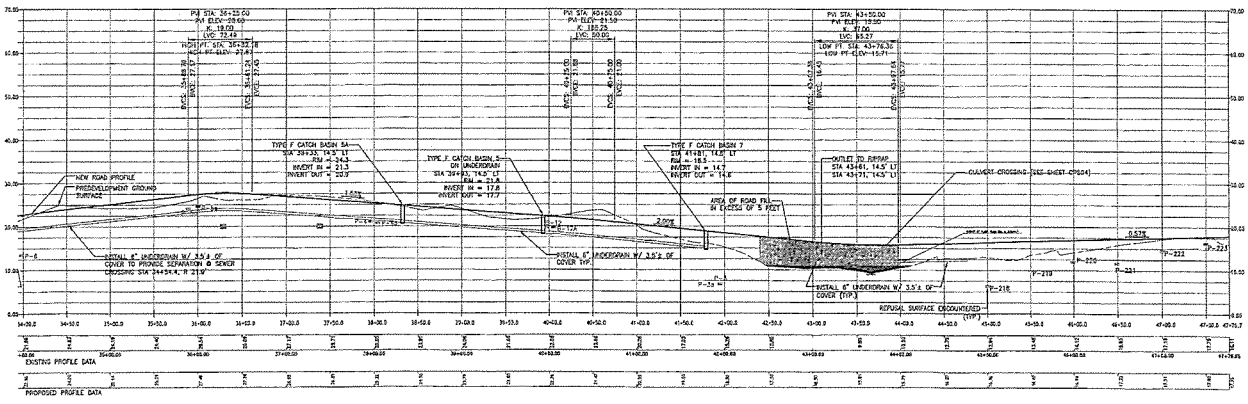

ROAD PROFILE
STATION 35+50 TO STATION 48+06.44

SCALE 1" = 10' VERTICAL
SCALE 1" = 50' HORIZONTAL

date _____ signature _____, CHAIR

SMRT
ARCHITECTURE ENGINEERING PLANNING INTERIOR DESIGN COMMISSIONING

YORK POLICE DEPARTMENT
1051 US ROUTE 1
YORK, MAINE

ISSUED FOR FINAL REVIEW
6-05-14

3	ISSUED FOR FINAL REVIEW	6-05-14
2	ISSUED FOR PRELIMINARY REVIEW	4-18-14
1	ISSUED FOR PRELIMINARY REVIEW	4-03-14
NO.	DESCRIPTION	DATE

CURRENT SITE STATUS:

GRAPHIC SCALE: 1"

SCALE: AS SHOWN
PROJECT MANAGER: DRS
JOB DRAWN BY: MGM
AVE. OF RECORD: RSJ
CAD FILE: CP105-CD12
PROJECT NO.: 0612
DATE:
SHEET TITLE: ROAD PLAN & PROFILE
SHEET NO. CP105

PROGRESS PRINT

Back to Agenda

Gorrill-Palmer Consulting Engineers, Inc.
Engineering Excellence Since 1998

PO Box 1237
15 Shaker Rd.
Gray, ME 04039

207-657-6910
FAX: 207-657-6912
E-Mail:mailbox@gorrillpalmer.com

January 24, 2012

Mr. Andrew Johnston, PE
SMRT
144 Fore Street
PO Box 618
Portland, ME 04104

Subject: York Connector Road with Police Station
York, Maine

Dear Andrew,

Project Understanding

The Town of York is proposing to construct a connector road between Route 1 and Ridge Road. This connector road will also serve as the frontage road for a new police station anticipated to be located toward the Ridge Road end of the connector.

The purpose of this review is to determine the necessary intersection configuration of a potential connector on the Route 1 end of the project. Route 1 at the location of the proposed intersection currently includes two travel lanes in each direction with a center left turn lane, for a total of a five lane cross-section. The posted speed limit in the area of the proposed intersection is 55 mph.

Capacity Analysis

Gorrill-Palmer performed a capacity analysis of this intersection for peak summer conditions, which is standard MaineDOT methodology. Since the connector is not in place for turning movement counts to be collected, we based the design volumes for Route 1 on an MaineDOT Automatic Traffic Recorder (ATR) counts completed at the end of July in 2010 (attached) at a location northeast of Old Post Road. For the volumes turning onto and off from the connector, we reviewed summer count volumes for the York Beach study recently done by this office and assumed half of the volumes using the roads to the north and south of the connector would use the new connector. For the existing driveway across from the proposed connector, volumes were assumed to be 20 vehicles per hour for each movement into or out of the facilities. This may be conservative since during field observations, the driveway experienced very minor traffic, far below the assumed 20 vehicles per movement. This driveway was not the controlling factor in the capacity or signal warrant analysis so a fluctuation in those volumes would not be expected to change any conclusions. The design hour volumes are shown graphically on the attached Figure 2.

The capacity analyses for the intersection was completed using the Synchro/SimTraffic software, with the SimTraffic results based on the average of five runs. The printouts of the results are attached to this letter.

Back to Agenda

Levels of service rankings are similar to the academic ranking system where an 'A' represents very little delay and an 'F' represents significant delay. At an unsignalized intersection, if the level of service falls below a 'D', an evaluation should be made to determine if mitigation, such as a traffic signal, is warranted.

The following tables summarize the relationship between delay and level of service for unsignalized and signalizaed intersections:

Level of Service Criteria for Unsignalized Intersections

Level of Service	Control Delay per Vehicle (sec)
A	Up to 10.0
B	10.1 to 15.0
C	15.1 to 25.0
D	25.1 to 35.0
E	35.1 to 50.0
F	Greater than 50.0

Level of Service Criteria for Signalized Intersections

Level of Service	Control Delay per Vehicle (sec)
A	Up to 10.0
B	10.1 to 20.0
C	20.1 to 35.0
D	35.1 to 55.0
E	55.1 to 80.0
F	Greater than 80.0

The intersection was analyzed both as signalized and unsignalized. Because Route 1 traffic volume and speeds are so high, both analyses were done assuming a southbound left turn lane and a northbound right turn deceleration lane.

The results of the capacity analyses are summarized on the following tables:

Level of Service for Route 1 at Connector Road / Business Driveway

Approach	Unsignalized LOS	Signalized LOS
Connector Road EB	F	B
Business Drive WB	F	C
Route 1 NB	A	C
Route 1 SB	A	B

Based on a review of the results using the forecast design hour volumes, under the unsignalized scenario, the exiting vehicles from the connector taking a left onto Route 1 operated so poorly in the modeling that the model was producing unrealistic results (i.e. delays of over an hour).

Back to Agenda

Because it operated so poorly as an unsignalized intersection, a signal warrant analysis was completed and is described in detail in the following section.

Signal Warrant Analysis

Signalization of an intersection is typically based on criteria outlined in the Manual on Uniform Traffic Control Devices (MUTCD). The MUTCD has been adopted by the MaineDOT and is used in evaluating if an intersection should be signalized. The MUTCD has 9 warrants for signalization. According to the MUTCD, "The satisfaction of a traffic signal warrant shall not in itself require the installation of a traffic control signal." However, MaineDOT requires that at least one of the 9 warrants be met before a signal is installed. The 9 signal warrants are as follows:

- Warrant 1, Eight-Hour Vehicular Volume
- Warrant 2, Four-Hour Vehicular Volume
- Warrant 3, Peak Hour
- Warrant 4, Pedestrian Volume
- Warrant 5, School Crossing
- Warrant 6, Coordinated Signal System
- Warrant 7, Crash Experience
- Warrant 8, Roadway Network
- Warrant 9, Intersection Near a Grade Crossing

For the purposes of this evaluation, Warrants 1-3 were reviewed. It is not expected that the proposed intersection would meet Warrrants 4-9.

Design Volumes – The MUTCD bases the evaluation of signal warrants on an average day for the year. Since the connector is not in place for counts to be collected, we based the design volumes for the Major Street on the Automatic Traffic Recorder (ATR) counts identified in the previous section. Since these counts were during the peak summer months, the volumes were adjusted down to average conditions using 2010 MaineDOT weekly Group Mean Factors (WGMF) by a factor of 0.77. The Major Street reduced two way traffic volume for Route 1 is summarized as follows:

Time	Adjusted Two-Way Volume
7-8 AM	632
8-9	839
9-10	1092
10-11	1344
11AM – 12PM	1367
12-1	1328
1-2	1287
2-3	1283
3-4	1379
4-5	1340
5-6	1264
6-7	1017
7-8	815

For the Minor Street design volumes, this evaluation was based on whether or not it is reasonable to expect that the side street volumes would meet the criteria. Since two approach lanes are anticipated on the connector road, the right turn volumes were not considered in the evaluation, and as such, the side street was considered a single lane approach using only the left turning volumes. This methodology is consistent with past analysis done for MaineDOT.

Since Route 1 in the vicinity of the potential connector intersection is posted 55 mph, the lower threshold volumes for locations posted above 40 mph were used for evaluating the signal warrants.

Warrant 1 (Eight-Hour Vehicular Volume) – There are two conditions in warrant 1 of the MUTCD, A and B. Condition A (Minimum Vehicular Volume) "is intended for application at locations where a large volume of intersecting traffic is the principal reason to consider installing a traffic control signal." Condition B (Interruption of Continuous Traffic) "is intended for application at locations where Condition A is not satisfied and where the traffic volume on a major street is so heavy that traffic on a minor intersecting street suffers excessive delay or conflict in entering or crossing the major street." For the warrant to be met, both Condition A and B do not need to be met, only one of the two conditions.

For condition A to be met, the major street volume would need to exceed 420 vehicles per hour for eight hours and the minor street volume (lefts only) would need to exceed 105 vehicles per hour for eight hours. *Although the major street volume meet this criteria, in our opinion it is unlikely that the connector road volumes would meet this criteria.*

For condition B to be met, the major street volume would need to exceed 630 vehicles per hour for eight hours and the minor street volume (lefts only) would need to exceed 53 vehicles per hour for eight hours. *It is clear from the major street volumes given previously that they would meet the criteria and in our opinion, it is likely that the connector road volumes would also meet their criteria.*

Therefore, in our opinion this warrant will most likely be met.

Warrant 2 (Four-Hour Vehicular Volume) – "The Four-Hour Vehicular Volume signal warrant conditions are intended to be applied where the volume of intersecting traffic is the principal reason to consider installing a traffic control signal." This warrant is met when for any four hours of an average day, the volume criteria as shown on the attached chart are satisfied. Since there are 10 time periods where the major street traffic volumes exceeds 950 vehicles per hour, for this warrant to be met, the connector street volume (lefts only) would only need to exceed 60 vehicles per hour for any four of those 10 hours.

Therefore, in our opinion this warrant will most likely be met

Warrant 3 (Peak Hour) – "The Peak Hour signal warrant is intended for use at a location where traffic conditions are such that for a minimum of 1 hour of an average day, the minor-street traffic suffers undue delay when entering or crossing the major street." This warrant is met when for

Back to Agenda

any hour of an average day, the volume criteria as shown on the attached chart is satisfied. Since there are 8 time periods where the major street traffic volumes exceeds 1,250 vehicles per hour, for this warrant to be met, the connector street volume (lefts only) would only need to exceed 75 vehicles per hour for any one of those 8 hours.

Therefore, in our opinion this warrant will most likely be met

Conclusion for Signal Warrant Analysis – Only one traffic signal warrant is required to warrant signalization of an intersection. Since all three of the volume based signal warrants are anticipated to be met, it is our opinion that the intersection will most likely meet warrants for signalization.

Sight Distance

Sight distance was evaluated at the approximate location of the connector road intersection with Route 1. MaineDOT has established required sight distances for State roads such as this. The MaineDOT required sight distance for a posted speed limit of 55 mph is 570 feet. Based on the field review, the available sight distance exiting where the connector would intersect Route 1 is 750 feet and over 1,300 feet looking left and right respectively. Therefore, available sight distance exceeds MaineDOT required sight distance.

In addition to MaineDOT required sight distance, the MUTCD also requires advanced visibility of the traffic signal heads. For 55 mph, the MUTCD minimum sight distance for signal visibility is 625 feet. Although the intersection is yet to be designed, it appears that this sight distance will be more than met.

Recommendations

Based on our review, we recommend the following:

- The connector road be located directly opposite the Sports Center driveway
- The connector road provide two exit lanes and a single entrance lane
- A dedicated Route 1 left turn lane be constructed – 250 feet plus taper
- A dedicated Route 1 right turn lane be constructed – 200 feet plus taper
- The intersection be signalized

The attached concept plan shows the above recommended improvements.

Preliminary Opinion of Probable Construction Cost

Based on the recommendations identified previously and the attached concept plan, we determined a Preliminary Opinion of Probable Construction Cost for the traffic signal installation and road widening to be $ 447,000. Approximately $140,000 of this is directly associated with the

Back to Agenda

traffic signals. This opinion of cost is subject to revision as more detailed information is obtained and construction drawings are created.

Sincerely,

Gorrill-Palmer Consulting Engineers, Inc.

Thomas L. Gorrill, P.E., PTOE
President

Attachments

Copy: Kyle Hall, MaineDOT
Steve Landry, MaineDOT

TLG/red/JN2471.01/Summary Letter 12-29-11

Location Map

Figure No. 1

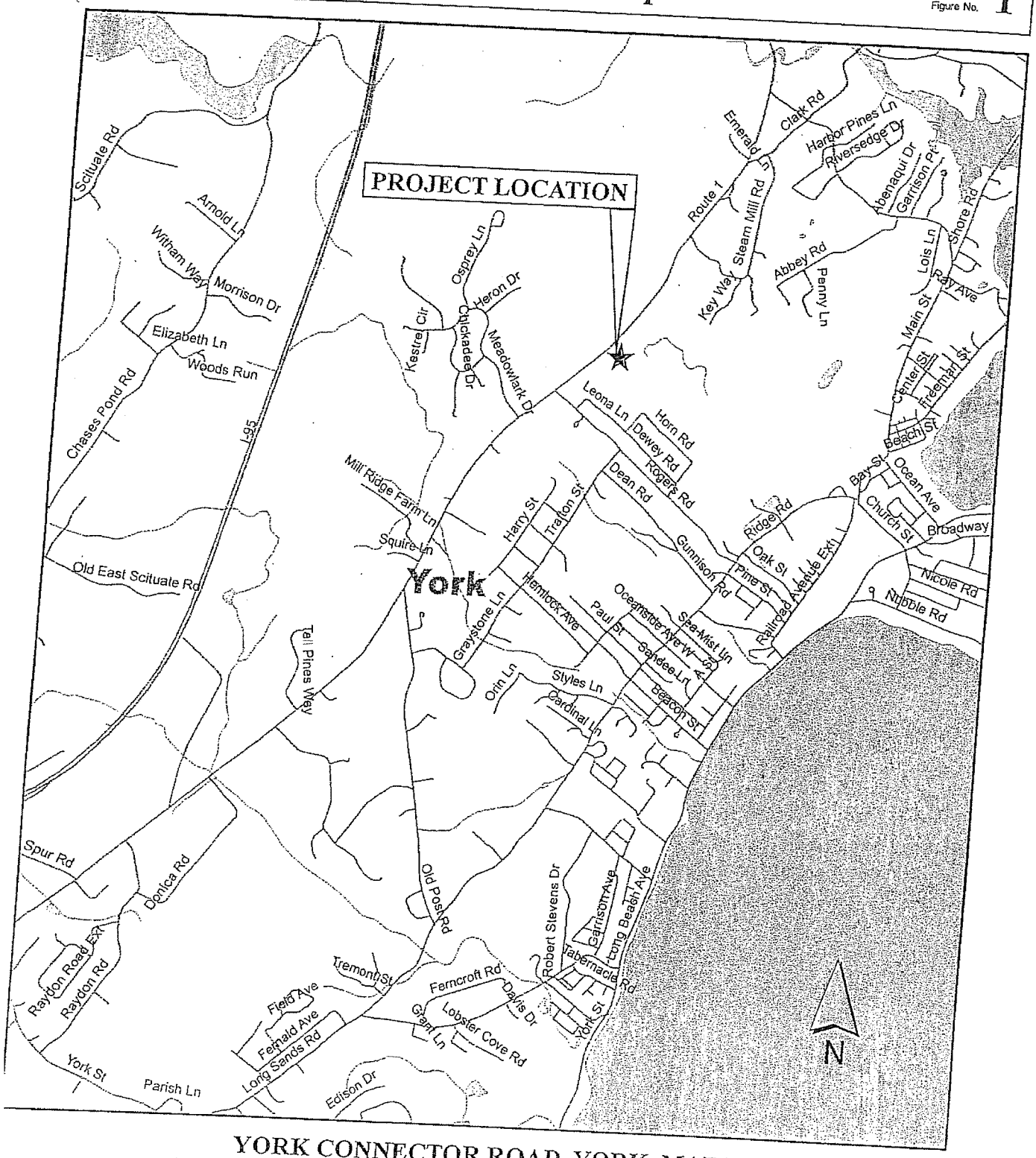

YORK CONNECTOR ROAD, YORK, MAINE

GP Gorrill-Palmer Consulting Engineers, Inc.
Engineering Excellence Since 1998
PO Box 1237
15 Shaker Road
Gray, ME 04039
207-657-6910
Fax: 207-657-6912
mailbox@gorrillpalmer.com
www.gorrillpalmer.com

2,000 0 2,000

JN: 2471.01
DATE: DEC 2011
FILE: 2471.01_LOCMAP.MXD
SOURCE: MAINE GIS WEBSITE

Back to Agenda

Design Volumes

Figure No. 2

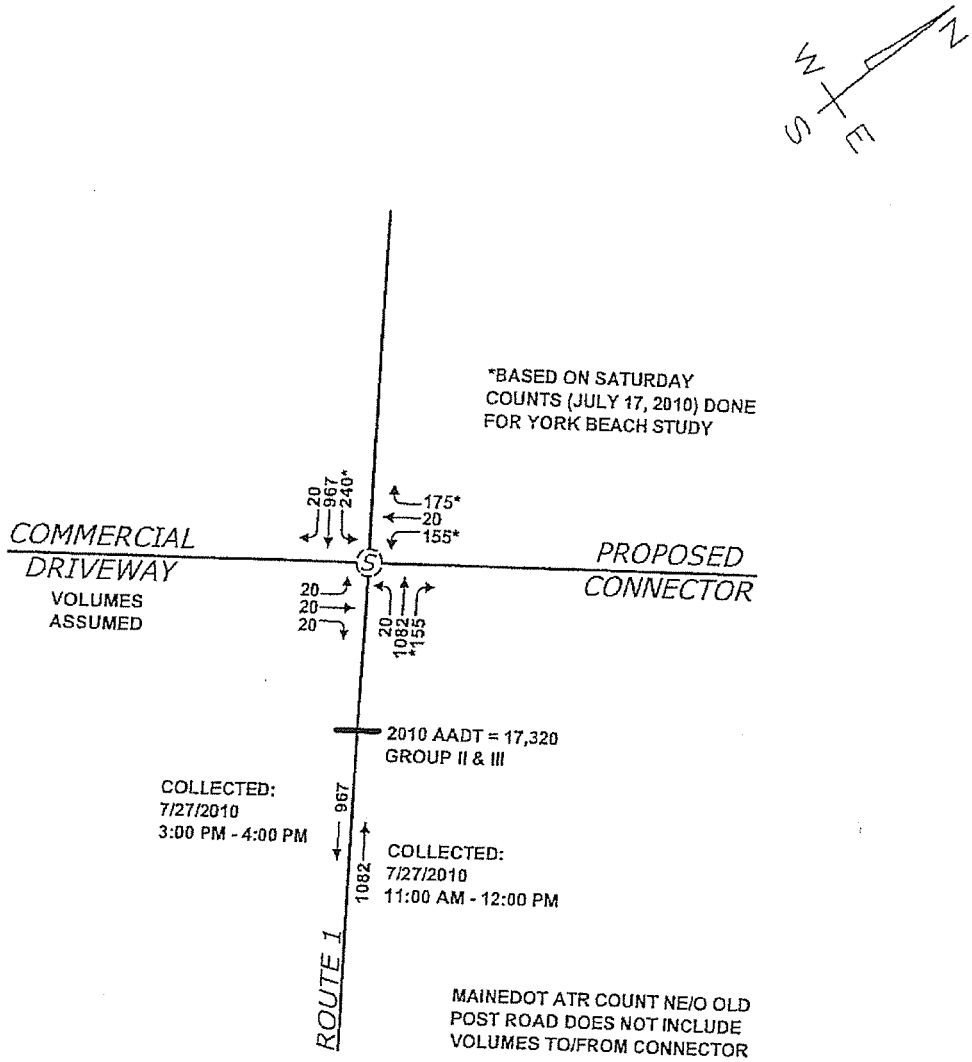

(S) DENOTES POTENTIAL SIGNAL

YORK CONNECTOR ROAD, YORK, MAINE

Design:	RED	Scale:	NONE
Draft:	DB	Date:	DEC 2011
Checked:	TLG	File Name:	2471-01_TRAFF.dwg

GP Gorrill–Palmer Consulting Engineers, Inc.
Engineering Excellence Since 1998
PO Box 1237
15 Shaker Road
Gray, ME 04039
207-657-6910
Fax: 207-657-6912
mailbox@gorrillpalmer.com
www.gorrillpalmer.com

Back to Agenda

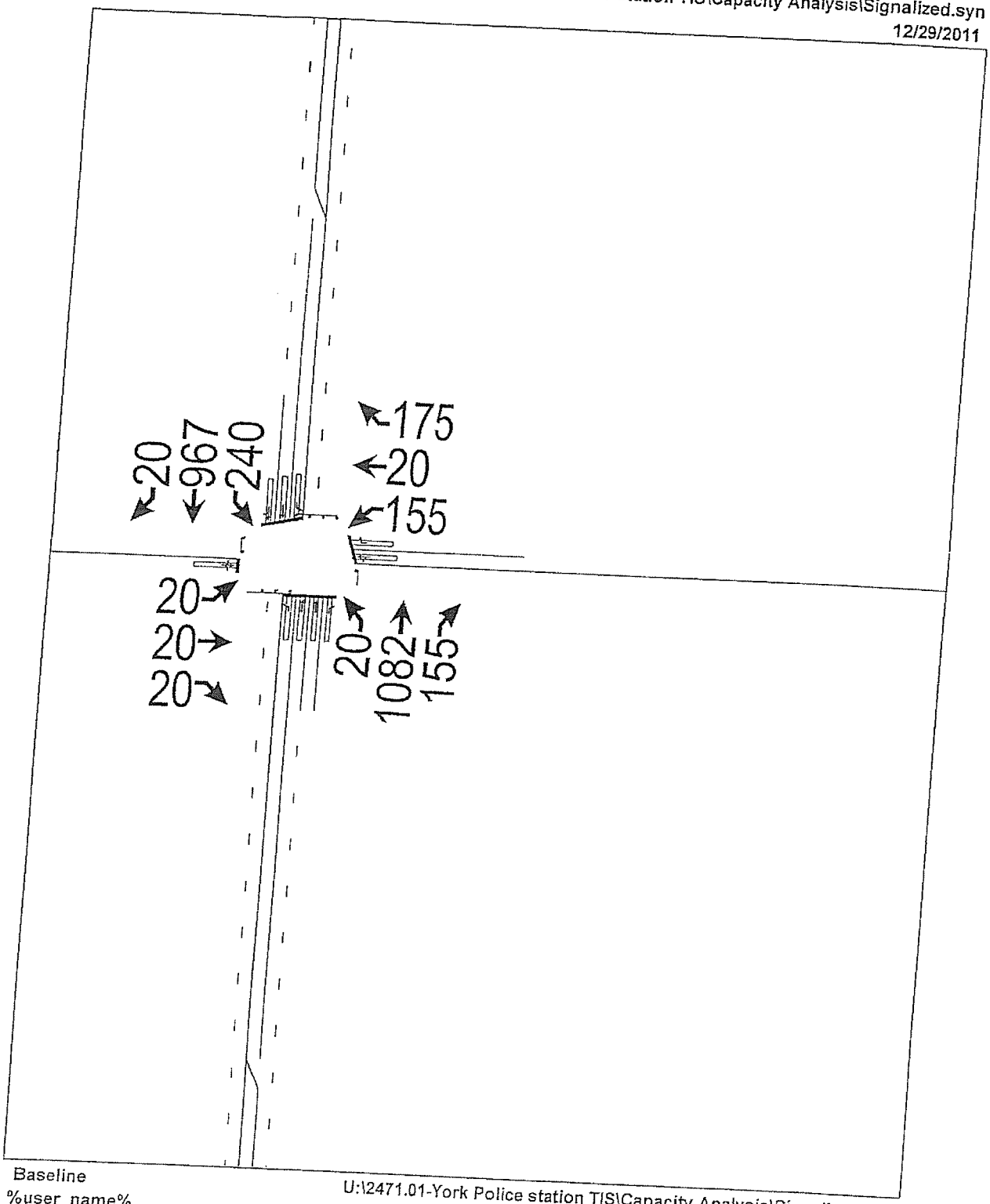

Back to Agenda

3: Int Performance by approach

Approach:	EB	WB	NB	SB	All
Total Delay (hr)	0.3	2.1	7.5	5.0	14.9
Delay / Veh (s)	17.5	21.6	21.7	15.0	18.8
Total Stops	46	252	956	590	1844
Travel Dist (mi)	7.5	73.5	189.9	152.4	423.3
Travel Time (hr)	0.6	4.8	14.1	10.3	29.8
Avg Speed (mph)	13	16	14	16	15
Fuel Used (gal)	0.3	2.5	7.6	5.8	16.1
HC Emissions (g)	1	20	65	49	136
CO Emissions (g)	63	548	2060	1593	4263
NOx Emissions (g)	5	60	221	159	445
Vehicles Entered	59	350	1242	1196	2847
Vehicles Exited	60	349	1244	1197	2850
Hourly Exit Rate	60	349	1244	1197	2850
Input Volume	60	350	1257	1227	2894
% of Volume	100	100	99	98	98
Denied Entry Before	0	0	0	0	0
Denied Entry After	0	0	1	0	1

Total Network Performance

Total Delay (hr)	16.4
Delay / Veh (s)	20.8
Total Stops	1845
Travel Dist (mi)	878.4
Travel Time (hr)	47.3
Avg Speed (mph)	19
Fuel Used (gal)	35.0
HC Emissions (g)	341
CO Emissions (g)	10824
NOx Emissions (g)	1181
Vehicles Entered	2847
Vehicles Exited	2841
Hourly Exit Rate	2841
Input Volume	5788
% of Volume	49
Denied Entry Before	0
Denied Entry After	1

Back to Agenda

Intersection: 3: Int

Movement	EB	WB	WB	NB	NB	NB	NB	SB	SB	SB
Directions Served	LTR	LT	R	L	T	T	R	L	T	TR
Maximum Queue (ft)	82	171	149	48	366	390	125	208	171	208
Average Queue (ft)	33	82	52	16	204	226	79	116	83	109
95th Queue (ft)	68	137	111	44	310	335	155	184	151	178
Link Distance (ft)	669	1101			807	807			663	663
Upstream Blk Time (%)										
Queuing Penalty (veh)										
Storage Bay Dist (ft)			150	400			100	250		
Storage Blk Time (%)		1	0		0	31	0	0		
Queuing Penalty (veh)		1	0		0	48	1	0		

Network Summary

Network wide Queuing Penalty: 51

Back to Agenda

Intersection: 3: Int

Phase	1	2	4	5	6	8
Movement(s) Served	SBL	NBT	EBTL	NBL	SBT	WBTL
Maximum Green (s)	11.0	25.0	16.0	4.0	32.0	16.0
Minimum Green (s)	4.0	4.0	4.0	4.0	4.0	4.0
Recall	None	Min	None	None	Min	None
Avg. Green (s)	10.6	24.7	12.1	4.2	40.0	12.1
g/C Ratio	0.16	0.39	0.18	0.02	0.61	0.18
Cycles Skipped (%)	2	0	4	72	2	4
Cycles @ Minimum (%)	0	0	0	28	0	0
Cycles Maxed Out (%)	78	82	22	28	59	22
Cycles with Peds (%)	0	0	0	0	0	0

Controller Summary

Average Cycle Length (s): 63.9
Number of Complete Cycles : 55

Back to Agenda

Lanes, Volumes, Timings
3: Int

12/29/2011

Lane Group	EBL	EBT	EBR	WBL	WBT	WBR	NBL	NBT	NBR	SBL	SBT	SBR
Lane Configurations												
Volume (vph)	20	20	20	155	20	175	20	1082	155	240	967	20
Ideal Flow (vphpl)	1900	1900	1900	1900	1900	1900	1900	1900	1900	1900	1900	1900
Storage Length (ft)	0		0	0		150	400		100	250		0
Storage Lanes	0		0	0		1	1		1	1		0
Taper Length (ft)	25		25	25		25	25		25	25		25
Lane Util. Factor	1.00	1.00	1.00	1.00	1.00	1.00	1.00	0.95	1.00	1.00	0.95	0.95
Frt		0.955				0.850			0.850		0.997	
Flt Protected		0.984			0.958		0.950			0.950		
Satd. Flow (prot)	0	1750	0	0	1785	1583	1770	3539	1583	1770	3529	0
Flt Permitted		0.844			0.704		0.950			0.950		
Satd. Flow (perm)	0	1501	0	0	1311	1583	1770	3539	1583	1770	3529	0
Right Turn on Red			Yes			Yes			Yes			Yes
Satd. Flow (RTOR)		22				12			109		4	
Link Speed (mph)		30			30			30			30	
Link Distance (ft)		715			1160			835			703	
Travel Time (s)		16.3			26.4			19.0			16.0	
Peak Hour Factor	0.92	0.92	0.92	0.92	0.92	0.92	0.92	0.92	0.92	0.92	0.92	0.92
Adj. Flow (vph)	22	22	22	168	22	190	22	1176	168	261	1051	22
Shared Lane Traffic (%)												
Lane Group Flow (vph)	0	66	0	0	190	190	22	1176	168	261	1073	0
Enter Blocked Intersection	No	No	No	No	No	No	No	No	No	No	No	No
Lane Alignment	Left	Left	Right	Left	Left	Right	Left	Left	Right	Left	Left	Right
Median Width(ft)		0			0			12			12	
Link Offset(ft)		0			0			0			0	
Crosswalk Width(ft)		16			16			16			16	
Two way Left Turn Lane												
Headway Factor	1.00	1.00	1.00	1.00	1.00	1.00	1.00	1.00	1.00	1.00	1.00	1.00
Turning Speed (mph)	15		9	15		9	15		9	15		9
Number of Detectors	1	1		1	1	1	1	1	1	1	1	
Detector Template	Left			Left								
Leading Detector (ft)	20	40		20	40	40	40	40	40	40	40	
Trailing Detector (ft)	0	0		0	0	0	0	0	0	0	0	
Detector 1 Position(ft)	0	0		0	0	0	0	0	0	0	0	
Detector 1 Size(ft)	20	40		20	40	40	40	40	40	40	40	
Detector 1 Type	Cl+Ex	Cl+Ex		Cl+Ex	Cl+Ex	Cl+Ex	Cl+Ex	Cl+Ex	Cl+Ex	Cl+Ex	Cl+Ex	
Detector 1 Channel												
Detector 1 Extend (s)	0.0	0.0		0.0	0.0	0.0	0.0	0.0	0.0	0.0	0.0	
Detector 1 Queue (s)	0.0	0.0		0.0	0.0	0.0	0.0	0.0	0.0	0.0	0.0	
Detector 1 Delay (s)	0.0	0.0		0.0	0.0	0.0	0.0	0.0	0.0	0.0	0.0	
Turn Type	Perm			Perm		pm+ov	Prot		Perm	Prot		
Protected Phases		4			8	1	5	2		1	6	
Permitted Phases	4			8		8			2			
Detector Phase	4	4		8	8	1	5	2	2	1	6	
Switch Phase												
Minimum Initial (s)	4.0	4.0		4.0	4.0	4.0	4.0	4.0	4.0	4.0	4.0	
Minimum Split (s)	22.0	22.0		22.0	22.0	10.0	10.0	22.0	22.0	10.0	22.0	
Total Split (s)	22.0	22.0	0.0	22.0	22.0	17.0	10.0	31.0	31.0	17.0	38.0	0.0
Total Split (%)	31.4%	31.4%	0.0%	31.4%	31.4%	24.3%	14.3%	44.3%	44.3%	24.3%	54.3%	0.0%

Baseline

Back to Agenda

Lanes, Volumes, Timings
3: Int

12/29/2011

Lane Group	EBL	EBT	EBR	WBL	WBT	WBR	NBL	NBT	NBR	SBL	SBT	SBR
Maximum Green (s)	16.0	16.0		16.0	16.0	11.0	4.0	25.0	25.0	11.0	32.0	
Yellow Time (s)	4.0	4.0		4.0	4.0	4.0	4.0	4.0	4.0	4.0	4.0	
All-Red Time (s)	2.0	2.0		2.0	2.0	2.0	2.0	2.0	2.0	2.0	2.0	
Lost Time Adjust (s)	0.0	0.0	0.0	0.0	0.0	0.0	0.0	0.0	0.0	0.0	0.0	0.0
Total Lost Time (s)	6.0	6.0	4.0	6.0	6.0	6.0	6.0	6.0	6.0	6.0	6.0	4.0
Lead/Lag						Lead	Lead	Lag	Lag	Lead	Lag	
Lead-Lag Optimize?						Yes	Yes	Yes	Yes	Yes	Yes	
Vehicle Extension (s)	3.0	3.0		3.0	3.0	3.0	3.0	3.0	3.0	3.0	3.0	
Recall Mode	None	None		None	None	None	None	Min	Min	None	Min	
Walk Time (s)	5.0	5.0		5.0	5.0			5.0	5.0		5.0	
Flash Dont Walk (s)	11.0	11.0		11.0	11.0			11.0	11.0		11.0	
Pedestrian Calls (#/hr)	0	0		0	0			0	0		0	
Acl Effct Green (s)		13.5			13.5	30.6	4.0	24.6	24.6	11.0	37.8	
Actuated g/C Ratio		0.20			0.20	0.46	0.06	0.37	0.37	0.16	0.56	
v/c Ratio		0.21			0.72	0.26	0.21	0.91	0.26	0.90	0.54	
Control Delay		17.9			41.8	11.7	36.2	33.1	7.7	64.4	12.1	
Queue Delay		0.0			0.0	0.0	0.0	0.0	0.0	0.0	0.0	
Total Delay		17.9			41.8	11.7	36.2	33.1	7.7	64.4	12.1	
LOS		B			D	B	D	C	A	E	B	
Approach Delay		17.9			26.7			30.0			22.3	
Approach LOS		B			C			C			C	

Intersection Summary

Area Type: Other
Cycle Length: 70
Actuated Cycle Length: 67.2
Natural Cycle: 70
Control Type: Actuated-Uncoordinated
Maximum v/c Ratio: 0.91
Intersection Signal Delay: 26.1
Intersection Capacity Utilization 74.5%
Analysis Period (min) 15

Intersection LOS: C
ICU Level of Service D

Splits and Phases: 3: Int

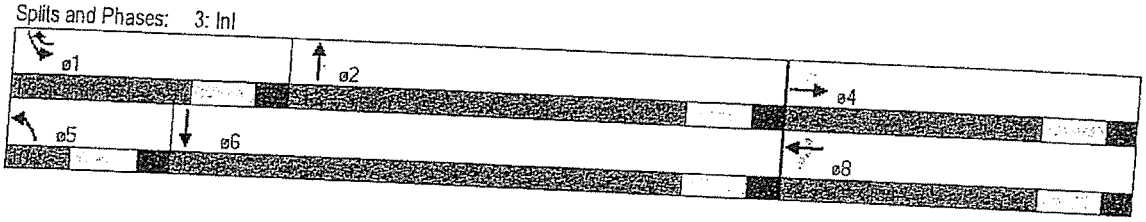

Back to Agenda

U:\2471.01-York Police station TIS\Capacity Analysis\Unsignalized.syn
12/29/2011

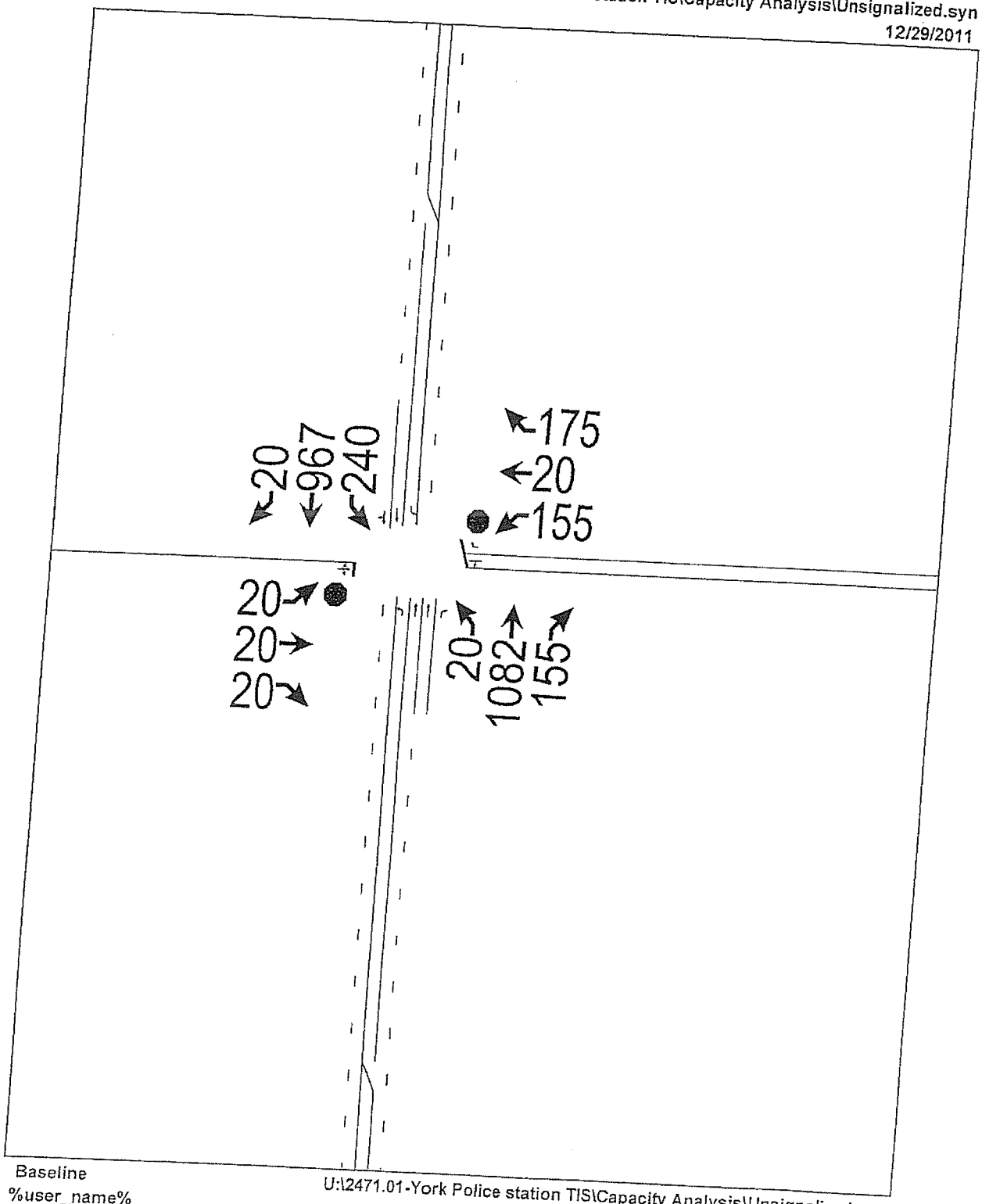

Baseline
%user_name%

U:\2471.01-York Police station TIS\Capacity Analysis\Unsignalized.syn

Summary of All Intervals

Run Number	2	3	5	6	7	Avg
Start Time	6:57	6:57	6:57	6:57	6:57	6:57
End Time	8:00	8:00	8:00	8:00	8:00	8:00
Total Time (min)	63	63	63	63	63	63
Time Recorded (min)	60	60	60	60	60	60
# of Intervals	2	2	2	2	2	2
# of Recorded Intvls	1	1	1	1	1	1
Vehs Entered	2711	2562	2646	2591	2689	2640
Vehs Exited	2642	2500	2589	2537	2624	2579
Starting Vehs	37	38	37	40	42	38
Ending Vehs	106	100	94	94	107	99
Denied Entry Before	0	0	5	0	3	0
Denied Entry After	237	232	239	191	234	226
Travel Distance (mi)	807	764	791	775	803	788
Travel Time (hr)	188.3	174.2	184.1	147.4	175.9	174.0
Total Delay (hr)	160.2	147.7	156.5	120.4	148.1	146.6
Total Stops	575	567	599	654	597	598
Fuel Used (gal)	63.1	58.7	61.5	52.8	60.1	59.3

Interval #0 Information Seeding

Start Time	6:57
End Time	7:00
Total Time (min)	3

Volumes adjusted by Growth Factors.
No data recorded this interval.

Interval #1 Information Recording

Start Time	7:00
End Time	8:00
Total Time (min)	60

Volumes adjusted by Growth Factors.

Run Number	2	3	5	6	7	Avg
Vehs Entered	2711	2562	2646	2591	2689	2640
Vehs Exited	2642	2500	2589	2537	2624	2579
Starting Vehs	37	38	37	40	42	38
Ending Vehs	106	100	94	94	107	99
Denied Entry Before	0	0	5	0	3	0
Denied Entry After	237	232	239	191	234	226
Travel Distance (mi)	807	764	791	775	803	788
Travel Time (hr)	188.3	174.2	184.1	147.4	175.9	174.0
Total Delay (hr)	160.2	147.7	156.5	120.4	148.1	146.6
Total Stops	575	567	599	654	597	598
Fuel Used (gal)	63.1	58.7	61.5	52.8	60.1	59.3

Back to Agenda

3: Int Performance by approach

Approach	EB	WB	NB	SB	All
Total Delay (hr)	8.9	133.8	1.0	2.3	146.0
Delay / Veh (s)	629.3	4587.6	3.0	6.8	201.4
Total Stops	59	275	46	218	598
Travel Dist (mi)	6.6	21.9	190.5	154.3	373.2
Travel Time (hr)	9.2	134.6	7.6	7.6	159.1
Avg Speed (mph)	1	0	27	22	5
Fuel Used (gal)	2.3	31.3	6.4	5.2	45.2
HC Emissions (g)	2	60	72	49	183
CO Emissions (g)	204	2310	2097	1389	5999
NOx Emissions (g)	9	72	228	147	455
Vehicles Entered	58	127	1245	1210	2640
Vehicles Exited	42	84	1244	1208	2578
Hourly Exit Rate	42	84	1244	1208	2578
Input Volume	60	350	1257	1227	2894
% of Volume	70	24	99	98	89
Denied Entry Before	0	0	0	0	0
Denied Entry After	0	226	0	0	226

Total Network Performance

Total Delay (hr)	146.6
Delay / Veh (s)	202.3
Total Stops	598
Travel Dist (mi)	787.9
Travel Time (hr)	174.0
Avg Speed (mph)	9
Fuel Used (gal)	59.3
HC Emissions (g)	337
CO Emissions (g)	10152
NOx Emissions (g)	925
Vehicles Entered	2640
Vehicles Exited	2579
Hourly Exit Rate	2579
Input Volume	5788
% of Volume	45
Denied Entry Before	0
Denied Entry After	226

Back to Agenda

Intersection: 3: Int

Movement	EB	WB	WB	NB	NB	NB	NB	SB	SB
Directions Served	LTR	LT	R	L	T	T	R	L	TR
Maximum Queue (ft)	451	1125	525	44	13	30	49	193	10
Average Queue (ft)	224	999	349	13	1	2	13	86	0
95th Queue (ft)	469	1411	708	40	6	14	39	161	6
Link Distance (ft)	669	1101			807	807			663
Upstream Blk Time (%)		77							
Queuing Penalty (veh)		0							
Storage Bay Dist (ft)			500	400			100	250	
Storage Blk Time (%)		84	23					0	
Queuing Penalty (veh)		146	41					0	

Network Summary

Network wide Queuing Penalty: 187

Back to Agenda

Back to Agenda

Lanes, Volumes, Timings
3: Int

12/29/2011

Lane Group	EBL	EBT	EBR	WBL	WBT	WBR	NBL	NBT	NBR	SBL	SBT	SBR
Lane Configurations												
Volume (vph)	20	20	20	155	20	175	20	1082	155	240	967	20
Ideal Flow (vphpl)	1900	1900	1900	1900	1900	1900	1900	1900	1900	1900	1900	1900
Storage Length (ft)	0		0	0		500	400		100	250		0
Storage Lanes	0		0	0		1	1		1	1		0
Taper Length (ft)	25		25	25		25	25		25	25		25
Lane Util. Factor	1.00	1.00	1.00	1.00	1.00	1.00	1.00	0.95	1.00	1.00	0.95	0.95
Frt		0.955				0.850			0.850		0.997	
Flt Protected		0.984			0.958		0.950			0.950		
Satd. Flow (prot)	0	1750	0	0	1785	1583	1770	3539	1583	1770	3529	0
Flt Permitted		0.984			0.958		0.950			0.950		
Satd. Flow (perm)	0	1750	0	0	1785	1583	1770	3539	1583	1770	3529	0
Link Speed (mph)		30			30			30			30	
Link Distance (ft)		715			1160			835			703	
Travel Time (s)		16.3			26.4			19.0			16.0	
Peak Hour Factor	0.92	0.92	0.92	0.92	0.92	0.92	0.92	0.92	0.92	0.92	0.92	0.92
Adj. Flow (vph)	22	22	22	168	22	190	22	1176	168	261	1051	22
Shared Lane Traffic (%)												
Lane Group Flow (vph)	0	66	0	0	190	190	22	1176	168	261	1073	0
Enter Blocked Intersection	No	No	No	No	No	No	No	No	No	No	No	No
Lane Alignment	Left	Left	Right	Left	Left	Right	Left	Left	Right	Left	Left	Right
Median Width(ft)		0			0			12			12	
Link Offset(ft)		0			0			0			0	
Crosswalk Width(ft)		16			16			16			16	
Two way Left Turn Lane												
Headway Factor	1.00	1.00	1.00	1.00	1.00	1.00	1.00	1.00	1.00	1.00	1.00	1.00
Turning Speed (mph)	15		9	15		9	15		9	15		9
Sign Control		Stop			Stop			Free			Free	

Intersection Summary

Area Type: Other
Control Type: Unsignalized
Intersection Capacity Utilization 69.5%
Analysis Period (min) 15

ICU Level of Service C

Back to Agenda

Gorrill-Palmer Consulting Engineers, Inc.
Preliminary Opinion of Probable Construction Cost

Job Number: 2471.01
PIN: None
Project Location: Route 1 / New Connector - York, Maine
Comments: Based on Conceptual Plan Dated Jan 6, 2012
Date: 1/6/2012
Completed By: ZRJ
Checked By: RCN

Notes:

1. Opinion of cost does not include Legal or Engineering Costs
2. Opinion of cost does not include the remediation or removal of any special or hazardous materials such as Asbestos, PCB's, etc.
3. Opinion of cost does not include costs associated with right of way
4. Opinion of cost is based on MDOT 2010 unit prices
5. Opinion of cost does not include wetland impacts
6. Opinion of cost does not include utility relocations, which are anticipated to be substantial
7. Opinion of cost does not include concrete roadway mitigation

Item	Item Description	Unit	Quantity	2010 MDOT UNIT PRICES (Adj. Where Applicable)	Total
			Roadway		
201.23	REMOVING SINGLE TREE TOP ONLY	EA	2	$ 600.00	$ 1,200.00
201.24	REMOVING STUMP	EA	2	$ 325.00	$ 650.00
202.202	REMOVING PAVEMENT SURFACE	SY	200	$ 12.00	$ 2,400.00
202.203	PAVEMENT BUTT JOINTS	SY	130	$ 18.00	$ 2,340.00
203.2	COMMON EXCAVATION	CY	1,750	$ 18.00	$ 31,500.00
203.21	ROCK EXCAVATION	CY	20	$ 100.00	$ 2,000.00
304.1	AGGR SUBB COURSE - GRAVEL	CY	1500	$ 30.00	$ 45,000.00
403.1021	TEXTURED ASPHALT PAVEMENT	SY	45	$ 58.00	$ 2,610.00
403.207	HOT MIX ASPHALT 19.0 MM HMA	T	470	$ 100.00	$ 47,000.00
403.208	HOT MIX ASPHALT 12.5 MM HMA SURFACE	T	160	$ 100.00	$ 16,000.00
403.209	HOT MIX ASPHALT 9.5 MM HMA (INCID.)	T	32	$ 140.00	$ 4,480.00
409.15	BITUMINOUS TACK COAT - APPLIED	G	98	$ 12.00	$ 1,177.50
606.24	GR TY 3D - SINGLE RAIL	LF	500	$ 22.00	$ 11,000.00
606.79	GUARDRAIL 350 FLARED TERMINAL	EA	1	$ 2,100.00	$ 2,100.00
606.78	LOW VOLUME GUARDRAIL END - TYPE 3	EA	5	$ 1,000.00	$ 5,000.00
615.07	LOAM	CY	230	$ 45.00	$ 10,350.00
618.1301	SEEDING METHOD NUMBER 1 - PLAN QUANTIT	UN	19	$ 46.00	$ 874.00
619.1201	MULCH - PLAN QUANTITY	UN	19	$ 34.00	$ 646.00
627.711	WH OR YELL PAINT PVMT MRK LINE (PL QUA	LF	5600	$ 0.70	$ 3,920.00
627.75	WHITE OR YELLOW PVMT AND CURB MARK	SF	370	$ 4.25	$ 1,572.50
643.8	TRAFFIC SIGNALS	LS	1	$ 140,000.00	$ 140,000.00
652.33	DRUM	EA	40	$ 45.00	$ 1,800.00
652.34	CONE	EA	50	$ 20.00	$ 1,000.00
652.35	CONSTRUCTION SIGNS	SF	200	$ 14.00	$ 2,800.00
652.36	MAINT OF TRAFFIC CONTR DEVICES	CD	40	$ 300.00	$ 12,000.00
652.38	FLAGGER	HR	800	$ 20.00	$ 16,000.00
652.41	PORTABLE - CHANGE MESSAGE SIGN	EA	2	$ 5,000.00	$ 10,000.00
656.75	TEMP SOIL EROSION & WATER POLLUTION CT	LS	1	$ 5,000.00	$ 5,000.00
659.1	MOBILIZATION	LS	1	$ 27,000.00	$ 27,000.00
			TOTAL		$ 405,570.00
			Contingency (10%)		$ 40,557.00
			TOTAL		$ 447,000.00

Back to Agenda

k to Agenda

k to Agenda

MEMO

TO: **Board of Selectmen**

FROM: **Stephen H. Burns, Interim Town Manager** SHB

DATE: **September 19, 2014**

RE: **Police Station and Connector Road Projects**

At the meeting I would like to discuss 3 matters concerning these two projects. First, it is time to pull together a charge for the Municipal Building Committee. I have drafted a Committee Charter to help us start this discussion.

Second, I have asked Dean to introduce a possible Municipal Partnership Grant application that could help offset the cost of the Route One/Connector Road intersection improvements. This application has not yet been submitted, but Dean and I feel it is important to get this information to the Board and in the public eye now, rather than at a later date when the wheels have already been set in motion. Dean has been quite successful in obtaining other MPI grant awards and this may prove to be a critical step towards ensuring there is adequate money to complete the connector road project. Dean and I are asking the Board to authorize submittal of the application.

Third, I would like the Board to schedule a workshop specifically to discuss the Police Station and Connector Road project. At this workshop it would be appropriate to finalize the Committee Charter, interview applicants for the Municipal Building Committee, review the budget and the status of all relevant issues relating to these projects, and to chart a way forward. Monday, September 29th is available if the Board would like to meet a week from now, or other dates can be arranged.

Back to Agenda

Maine Municipal Association

60 COMMUNITY DRIVE
AUGUSTA, MAINE 04330-9486
(207) 623-8428
www.memun.org

MEMORANDUM

TO: Key Municipal Officials of MMA Member Cities, Towns and Plantations

FROM: Christopher G. Lockwood, Executive Director

DATE: September 2, 2014

SUBJECT: Voting Credentials for MMA Annual Business Meeting

The Maine Municipal Association Annual Business Meeting is being held in conjunction with the MMA Annual Convention and will take place on **Wednesday, October 1, 2014, at 1:30 p.m. in the Cumberland Room at the Augusta Civic Center**. The MMA Bylaws entitle each member community to one (1) voting representative.

Enclosed please find the ***MMA Voting Delegates Credential Form*** on which the municipal officers may designate their municipality's voting representative and alternate. We have also attached the Proposed Agenda for the MMA Annual Business Meeting for your reference. The current MMA Bylaws as adopted in 2013 will be available at the MMA Annual Business Meeting or may be viewed on the MMA website at

http://www.memun.org/public/MMA/Gov/bylaws.pdf.

If you plan to be at the MMA Annual Convention and would like to have a Voting Delegate represent your municipality, please complete the MMA Voting Delegate Credential Form and return to our office by **Tuesday, September 30, 2014** or bring it with you to the MMA Annual Business Meeting. We have provided a self-addressed, self-stamped envelope for your convenience.

We look forward to seeing you at this year's MMA Annual Convention. If you have any questions on this information, please contact Theresa Chavarie at 1-800-452-8786 ext. 2211 or in the Augusta area at 623-8428.

Back to Agenda

Maine Municipal Association
Annual Business Meeting
Wednesday, October 1, 2014
1:30 – 2:30 p.m.
Augusta Civic Center
Level 1 – Cumberland Room

AGENDA

1. **Introductions and Welcoming Remarks – MMA President Peter Nielsen (Town Manager, Town of Oakland)**

2. **Approval of 2013 MMA Annual Business Meeting Minutes – Peter Nielsen**

3. **MMA President's Report – Peter Nielsen**

4. **Announcement of Election Results for MMA Executive Committee and Introduction of New Executive Committee Members – Peter Nielsen**

5. **Executive Director's Report - Christopher Lockwood**

6. **Other Business** ***(comments from the floor)***

7. **Adjournment**

Back to Agenda

MAINE MUNICIPAL ASSOCIATION

VOTING DELEGATE CREDENTIALS

_____ is hereby designated as the official Voting Delegate and
(name)

_____ as the alternate voting delegate for _____
(name) *(municipality)*

to the Maine Municipal Association Annual Business Meeting which is scheduled to be held,

Wednesday, October 1, 2014, 1:30 p.m., at the Augusta Civic Center, Augusta, Maine.

The Voting Delegate Credentials may be cast by a majority of the municipal officers, or a municipal official designated by a majority of the municipal officers of each Municipal member.

Date: _____ **Municipality:** _____

Signed by a Municipal Official designated by a majority of Municipal Officers:

Name: _____ **Position:** _____

Or Signed by a Majority of Municipal Officers:

_____ _____

_____ _____

_____ _____

_____ _____

_____ _____

Please return this form no later than **Tuesday, September 30, 2014** or bring it with you to the MMA Annual Business Meeting. If mailing, send to:

MMA Annual Business Meeting
Maine Municipal Association
60 Community Drive
Augusta, Maine 04330
FAX: 207-626-3358

Back to Agenda

AGENDA ITEM NUMBER: ____

REQUEST FOR ACTION BY BOARD OF SELECTMEN

Date Submitted: September 15, 2014	**Type of Action:**
Date Action Requested: September 22, 2014	☐ **Procedural** ☒ **Formal Action**
Regular X **Work Session** __	☐ **Other:** _____
Subject: Request to Stay in RV During Construction at 42 Old Mountain Road	

TO: **BOARD OF SELECTMEN**

FROM: Melissa M. Avery, Assistant to the Town Manager

RECOMMENDATION:

PROPOSED MOTION: I move to authorize the residents of 42 Old Mountain Road to locate a Recreational Vehicle on the property for a period of one year while repairs and renovations are made to the home.

Discussion: Pursuant to Article 7.1 of the Town of York Zoning Ordinance, a recreational vehicle may be located on the property during construction of a home with the permission of the Board of Selectmen. Attached is the written request from the resident of the property and Article 7.1 of the Zoning Ordinance.

FISCAL IMPACT:

DEPARTMENT LINE ITEM ACCOUNT:

BALANCE IN LINE ITEM IF APPROVED:

Prepared By: Melissa M Avery

Reviewed By:

Back to Agenda

09/15/2014

Missy Avery
Assistant to the Town Manager
Town of York
186 York St
York, ME 03909

Dear Ms Avery;

I am applying for a Building Permit for renovations to my home at 42 Old Mountain Rd, Cape Neddick. The roof needs repairs and renovations due to ice dams, and water damage repairs inside include the only bathroom and master bedroom.

During these renovations I would like to request permission to use my camper trailer as temporary housing. Since the demolition and most renovations will be done myself, I estimate 3-4 months for this project to be complete.

Thank you for your time + consideration,

Sincerely,

Emilia Pepen

Back to Agenda

ARTICLE SEVEN

SPECIAL PROVISIONS

7.1 Temporary Use of Manufactured Housing Unit

Any person who can show good intentions of building a home may apply to the Board of Selectmen for a permit to locate a manufactured housing unit or recreation vehicle on the proposed home site during the construction of said home for a period of one year. If the applicant, at the end of one year, has not finished the proposed home to a livable state, the applicant may re-apply to the Board of Selectmen for a maximum of twelve (12) months extension of said permit. The Board of Selectmen, after being satisfied of good faith on the part of the applicant, may issue such permit for one year and extend such permit not to exceed twelve (12) months beyond the initial year. This allowance shall apply within the following zones:

A. RES 1-A, RES 1-B, RES-2, RES-3, YBVC, GEN-1, GEN-2 and GEN-3 base zoning districts;
B. Watershed Protection Overlay District; and
C. Shoreland Overlay District - Mixed Use subdistrict (Shoreland Permit from CEO also required), Limited Residential Subdistrict (Shoreland Permit from CEO also required) and Resource Protection Subdistrict (Special Use Permit from Planning Board per §18.2.7 also required), but prohibited in the Stream Protection Subdistrict.

(This provision is not meant to exclude trailers used for the sole purpose of a "Construction Office" located at the building site. "Construction Office" trailers shall not be equipped with sleeping accommodations and shall be removed from the site within 30 days after occupancy of the principal use.) - **AMENDED 11/04/08, 5/19/2012**

7.1-A. Temporary Use of Recreation Vehicles
On any lot other than a campground, one recreation vehicle may be occupied overnight for not more than 1 week per calendar year. Occupancy by more units or longer than 1 week shall be prohibited. **– AMENDED 5/19/2012**

7.2 Campgrounds

7.2.1 Provisions Applicable to BUS-2 District

Campgrounds shall be allowed only under the following conditions:

7.2.1.1 No building shall be used or erected to be used in connection with a campground within BUS-2, without a permit therefore, issued by the Code Enforcement Officer. Such person shall file an application for said permit to erect said structure, specifying the location of such buildings, the nature of their constructions, and the size and design of said buildings. Upon the filing of such application, if the Code Enforcement Officer shall determine that said structures are of adequate strength and are so located and constructed to be safe against fire, and have proper sanitary and toilet facilities, then he may grant a permit for the erection and use of the same for a campground. The word "building" as herein used, shall include an overnight bungalow, store, filling station, toilet, or other structure which shall be used in connection with a camping ground.

7.2.1.2 No person keeping a campground shall permit an accumulation of offal, garbage, rubbish or waste of any kind on or near said campgrounds. He shall, at all times keep said camping ground and the buildings thereon in a sanitary and wholesome condition and shall at all times provide adequate sanitary toilet facilities for his patrons. He shall not allow any patrons to remain on said campground who shall disturb the peace of the neighborhood or annoy the residents of the town by trespassing upon their property or by other unlawful conduct.

7.2.2 Provisions Applicable to all zones other than the BUS-2 Zone – AMENDED 11/7/2006

7.2.2.1 No trailers other than such as are recreational vehicles as defined herein shall be permitted within any camper park, temporarily or otherwise.

Back to Agenda

TOWN OF YORK

186 York Street
York, Maine 03909
(207) 363-1002
www.yorkmaine.org

Building/Use Permit
Authorization to Proceed

Building Permit # 2014-0634

Permit Fee $ $50.00 Cash ☒ | Check # _____

NAME OF APPLICANT	MAP - LOT
Emilia Pepen	0096-0069
PROJECT ADDRESS	**EST'D VALUE OF PROJECT**
42 OLD MOUNTAIN ROAD	

PROJECT DESCRIPTION
Demo in prep for remodel. No new construction at this time.

CONDITIONS

COMMERCIAL / RESIDENTIAL

IMPACT FEE REQUIRED ☐

Check All Types of Inspections Required

- ☐ EROSION CONTROL
- ☐ FOUNDATION WALL PRE-POUR
- ☐ FOUNDATION WATERPROOFING
- ☐ PERIMETER DRAINS
- ☐ SONOTUBES
- ☐ FOUNDATION SLAB
- ☐ ROUGH FRAMING
- ☐ ROUGH ELECTRICAL
- ☐ INSULATION
- ☐ CHIMNEY/FIREBOX
- ☐ CHIMNEY FINAL
- ☐ OTHER: _____
- ☐ PLUMBING (SEE PLUMBING PERMIT)
- ☐ REQUIRED STATE INSPECTIONS
- ☒ FINAL INSPECTION/OCCUPANCY*

*
** NO OCCUPANCY WITHOUT OCCUPANCY PERMIT

Check All Permit Types That Apply

- ☒ BUILDING PERMIT
- ☐ ACCESSORY DWELLING UNIT PERMIT
- ☐ CONDOMINIUM CONVERSION PERMIT
- ☐ FLOOD PERMIT, MINOR DEVELOPMENT
- ☐ FLOOD PERMIT, NON-RESIDENTIAL
- ☐ FLOOD PERMIT, 2-PART - PART 1
- ☐ FLOOD PERMIT, 2-PART - PART 2
- ☐ HOME OCCUPANCY PERMIT
- ☐ ROUTE ONE USE PERMIT
- ☐ SEASONAL CONVERSION
- ☐ SHORELAND PERMIT
- ☐ SIGN PERMIT
- ☐ USE PERMIT
- ☐ WATERSHED PROTECTION USE PERMIT
- ☐ WELL PERMIT
- ☐ WETLAND PERMIT
- ☐ WIRELESS TELECOMMUNICATIONS PERMIT
- ☐ YORK BEACH DESIGN STANDARDS PERMIT

☐ COMMERCIAL ☐ RESIDENTIAL

CALL (207) 363-1002 TO SCHEDULE YOUR INSPECTION

- BUILDING PERMITS DO NOT INCLUDE PLUMBING, SEPTIC OR COMMERCIAL ELECTRICAL WORK.
- HOMEOWNERS MAY DO THEIR OWN PLUMBING AND ELECTRICAL IN THEIR PRIMARY, YEAR-ROUND RESIDENCE.
- BUILDING PERMITS EXPIRE IF INACTIVE FOR ANY 6 MONTH PERIOD (I.E. NO INSPECTIONS).
- ANY FALSE INFORMATION MAY INVALIDATE A BUILDING PERMIT AND STOP ALL WORK.
- ALL WORK MUST COMPLY WITH THE MAINE UNIFORM BUILDING AND ENERGY CODE (MUBEC); MAINE HAS ADOPTED THE NATIONAL CODES AND STANDARDS, AMENDMENTS CAN BE FOUND ON THE STATE'S WEBSITE www.maine.gov

CODE ENFORCEMENT OFFICER SIGNATURE	Sep 15, 2014 ISSUE DATE	Mar 14, 2015 EXPIRATION DATE

Back to Agenda

TOWN OF YORK

186 York Street
York, ME 03909
207-363-1002 www.yorkmaine.org

APPLICANT TO USE BLACK OR BLUE INK

Building/Use Permit Application Form

REC'D BY:_____ DATE:_____

1. PROPERTY OWNER NAME: Emilia Pepen
Phone: C: 617 331 9029 E-mail: emilia.pepen@gmail

• Provide evidence of right/title/interest.

2. APPLICANT NAME*: ✓
Phone: E-mail:
• Check if property owner is the applicant.
If not owner of record, must have written authorization from owner.

3. APPLICANT ADDRESS 42 Old Mountain Rd
Cape Neddick 03902

4. MAP/LOT: 0096/0069

5. Base Zone District: _____

6. Value of Project: _____

7. Project Address:
42 Old Mountain Rd
Cape Neddick 03902

8. Lot of Record, What Year: _____

9. Identify Adjacent Lots Under Same Ownership: _____

PROJECT INFORMATION

10. Select One: • Building Permit • Use Permit • Combined Building and Use Permit

11. USES: List all existing and proposed uses for this property. Identify accessory uses, if applicable.

• Check if any non-residential use is involved.

12. CONSTRUCTION/ACTIVITY. Describe proposed construction/activity to be permitted.

Inspection of Roof interior to determine cause of ice dams/leaks
Removal of water damaged drywall + insulation on 1st floor
Removal of water damaged insulation in Roof and Roofing Material

13.	Existing	Proposed	N/A	14. OVERLAY DISTRICTS (check all that apply)	
Number of Stories				Elderly Congregate Housing Overlay District	
Building/Structure Height				Farm Enterprise Overlay District	
Number of Bathrooms				Shoreland Overlay District	
Number of Bedrooms				Watershed Protection Overlay District	
Septic System Limit of Bedrooms				Wetland Protection Overlay District	
Seasonal or Year-Round Use				Workforce Affordable Housing Overlay District	
Number of Parking Spaces				York Village Affordable Elderly Housing Overlay District	
Number of Residential Units				York Village Center Overlay District	
				York Village Hospital Overlay District	
Area of Lot (s.f.) (FYI: 1 acre=43,560 s.f.)				Historic District	

Back to Agenda

WATER/SEWER INFORMATION

15. TYPE OF WATER SUPPLY: ▪ PUBLIC ▪ ✓ PRIVATE

WATER DISTRICT SUPERINTENDENT'S APPROVAL _____ DATE _____

16. TYPE OF SEWAGE DISPOSAL: ▪ PUBLIC ▪ ✓ PRIVATE [Provide a copy of the septic plan (HHE-200) if proposal would increase septic usage.]

SEWER DISTRICT SUPERINTENDENT'S APPROVAL _____ DATE _____

PROPERTY INFORMATION

17.	LOT SIZE (SQ. FT. OR ACRES:			PERCENTAGE OF	LOT COVERAGE
				(IMPERVIOUS SURFACE RATIO)	
	Street Frontage:	Ft.		Present: %	Sq.Ft.
	Water Frontage:	Ft.		Proposed: %	Sq.Ft.
				Zone: %	Sq.Ft.
	Check if Non-Conforming			Check if Not Applicable	
	Required Setbacks: Front			Proposed Setbacks: Front	
	Side			Side	
	Rear			Rear	

- BUILDING PERMITS DO NOT INCLUDE PLUMBING, SEPTIC OR COMMERCIAL ELECTRICAL WORK.
- HOMEOWNERS MAY DO THEIR OWN PLUMBING AND ELECTRICAL WORK ONLY IN THEIR PRIMARY YEAR-ROUND RESIDENCE. SUCH WORK IS SUBJECT TO PERMITTING AND INSPECTIONS.
- BUILDING PERMITS EXPIRE IF INACTIVE FOR 6 OR MORE MONTHS (i.e. no inspections) .
- ALL WORK MUST COMPLY WITH MAINE UNIFORM BUILDING and ENERGY CODE (MUBEC). MAINE HAS ADOPTED THE NATIONAL CODES AND STANDARDS. AMENDMENTS CAN BE FOUND BY GOING TO THE STATE'S WEBSITE: www.maine.gov/dps/bbcs
- ANY FALSE INFORMATION MAY INVALIDATE A BUILDING PERMIT AND STOP ALL WORK.
- SIGNING AUTHORIZES INSPECTIONS NECESSARY TO ISSUE PERMIT AND ENSURES COMPLIANCE WITH STATE BUILDING CODES AND ANY OTHER APPLICABLE REGULATIONS.
- IF THERE IS A PROPOSED EXPANSION YOU MUST SUBMIT A SCALED PLOT PLAN, WITH SIDE VIEW DRAWING AND ALL APPLICABLE STATE AND FEDERAL PERMITS.

18. Emilia Pegan
PROPERTY OWNER, OR APPLICANT WITH OWNER'S WRITTEN PERMISSION

09/15/2014
DATE

AGENDA ITEM NUMBER: ____

REQUEST FOR ACTION BY BOARD OF SELECTMEN

Date Submitted: September 18, 2014	**Type of Action:**
Date Action Requested: September 22, 2014	☐ **Procedural** ☒ **Formal Action**
Regular X **Work Session** __	☐ **Other:** _____
Subject: Special Event Permit: Harvest Cup	

TO: **BOARD OF SELECTMEN**

FROM: Melissa M. Avery, Assistant to the Town Manager

RECOMMENDATION:

PROPOSED MOTION: I move to approve Special Event Permit application for the York Soccer Club's *Harvest Cup* event for Saturday, Sunday and Monday, October 11-13, 2014 with the attached conditions given by Department Heads.

Discussion: All appropriate departments have been notified and given approval, see attached.

FISCAL IMPACT:

DEPARTMENT LINE ITEM ACCOUNT:

BALANCE IN LINE ITEM IF APPROVED:

Prepared By: _____ Reviewed By: _____

Back to Agenda

Town of York, Maine
Special Event Permit Application

This application for a special event permit is hereby presented to the York Town Manager, 186 York Street, York, ME 03909.

Date: 9/3/14

Name of Event: Harvest Cup

Type of Event: Youth Soccer tournament

Organization Name: York Soccer Club Phone #: 603-933-0428

Organization Address: PO Box 527 City York State: ME Zip: 03909

Applicant Name: Dean DeLuca Phone #: 603-933-0428

Applicant Address: 40 Flint Rock City: York State: ME Zip: 03909

Contact Name for Day of Event: Dean DeLuca Contact Phone #: 603-933-0428

Date of Event: Oct 11-13 Day of Week: Sat - Monday

Starting Time: 10/11/14 8:00 am Ending Time: 10/13/14 4:00 p.m.

Assembly Area: Bog Road Field, High School, Village Elementary

Dispersal Area: N/A

Event Route: N/A

Approximate Number of Persons Attending (If more than 500, Insurance coverage needed)
3,000

Describe number of bands, vehicles, signs, floats, or other articles carried or displayed along with method of participation (walking, bicycles, motorcycles etc):
N/A

Describe how group is organized and supervised to insure order: Volunteers & York Police for Traffic

Purpose of the Event: Fund raising for York Soccer Club

The above information is true to the best of my knowledge and belief.

Signature of Applicant: Dean DeLuca

Rec'd 9/8

Back to Agenda

For Town Use Only

Reviewed by:

Department	**Initials**	
Police Department	Szeniawski	09-18-2014
Public Works	Lessard	09-08-2014
Parks/Recreation	Sullivan	09-08-2014
Village Fire	Apgar	09-08-2014
York Beach Fire	Bridges	09-09-2014
Code Enforcement	Burns	09-08-2014
York Ambulance	Prince	09-08-2014

Special Conditions:

Parks and Recreation: Recommend that parking attendant are used at the Bog Road facility in order to insure proper and safe parking. Parks and Recreation will line areas for overflow parking if requested.

Any Questions: Mike Sullivan (207) 363-1040

Town Manager

Date

CERTIFICATE OF LIABILITY INSURANCE

DATE (MM/DD/YYYY): 8/27/2014

THIS CERTIFICATE IS ISSUED AS A MATTER OF INFORMATION ONLY AND CONFERS NO RIGHTS UPON THE CERTIFICATE HOLDER. THIS CERTIFICATE DOES NOT AFFIRMATIVELY OR NEGATIVELY AMEND, EXTEND OR ALTER THE COVERAGE AFFORDED BY THE POLICIES BELOW. THIS CERTIFICATE OF INSURANCE DOES NOT CONSTITUTE A CONTRACT BETWEEN THE ISSUING INSURER(S), AUTHORIZED REPRESENTATIVE OR PRODUCER, AND THE CERTIFICATE HOLDER.

IMPORTANT: If the certificate holder is an ADDITIONAL INSURED, the policy(ies) must be endorsed. If SUBROGATION IS WAIVED, subject to the terms and conditions of the policy, certain policies may require an endorsement. A statement on this certificate does not confer rights to the certificate holder in lieu of such endorsement(s).

PRODUCER

Bollinger Insurance
101 JFK Parkway
Short Hills NJ 07078

CONTACT NAME:
PHONE (A/C, No, Ext):
FAX (A/C, No):
E-MAIL ADDRESS:

INSURER(S) AFFORDING COVERAGE	NAIC #
INSURER A : Markel Insurance Company	38970
INSURER B : Federal Insurance Company	124
INSURER C :	
INSURER D :	
INSURER E :	
INSURER F :	

INSURED

SoccerMaine-United
Soccer Federation of Maine
512 Warren Avenue
Portland ME 04103

COVERAGES **CERTIFICATE NUMBER:** 1407089151 **REVISION NUMBER:**

THIS IS TO CERTIFY THAT THE POLICIES OF INSURANCE LISTED BELOW HAVE BEEN ISSUED TO THE INSURED NAMED ABOVE FOR THE POLICY PERIOD INDICATED. NOTWITHSTANDING ANY REQUIREMENT, TERM OR CONDITION OF ANY CONTRACT OR OTHER DOCUMENT WITH RESPECT TO WHICH THIS CERTIFICATE MAY BE ISSUED OR MAY PERTAIN, THE INSURANCE AFFORDED BY THE POLICIES DESCRIBED HEREIN IS SUBJECT TO ALL THE TERMS, EXCLUSIONS AND CONDITIONS OF SUCH POLICIES. LIMITS SHOWN MAY HAVE BEEN REDUCED BY PAID CLAIMS.

INSR LTR	TYPE OF INSURANCE	ADDL INSR	SUBR WVD	POLICY NUMBER	POLICY EFF (MM/DD/YYYY)	POLICY EXP (MM/DD/YYYY)	LIMITS	
A	GENERAL LIABILITY	Y		3602AH027607	9/1/2014	9/1/2015	EACH OCCURRENCE	$1,000,000
	X COMMERCIAL GENERAL LIABILITY						DAMAGE TO RENTED PREMISES (Ea occurrence)	$300,000
	CLAIMS-MADE X OCCUR						MED EXP (Any one person)	$5,000
	X Participant Liab						PERSONAL & ADV INJURY	$1,000,000
							GENERAL AGGREGATE	$5,000,000
	GEN'L AGGREGATE LIMIT APPLIES PER:						PRODUCTS - COMP/OP AGG	$2,000,000
	POLICY PRO-JECT X LOC							$
A	AUTOMOBILE LIABILITY	Y		3602AH027607	9/1/2014	9/1/2015	COMBINED SINGLE LIMIT (Ea accident)	$1,000,000
	ANY AUTO						BODILY INJURY (Per person)	$
	ALL OWNED AUTOS / SCHEDULED AUTOS						BODILY INJURY (Per accident)	$
	X HIRED AUTOS / X NON-OWNED AUTOS						PROPERTY DAMAGE (Per accident)	$
								$
A	UMBRELLA LIAB X OCCUR	Y		4602AH027608	9/1/2014	9/1/2015	EACH OCCURRENCE	$1,000,000
	X EXCESS LIAB CLAIMS-MADE						AGGREGATE	$
	DED RETENTION $							$
	WORKERS COMPENSATION AND EMPLOYERS' LIABILITY						WC STATU-TORY LIMITS / OTH-ER	
	ANY PROPRIETOR/PARTNER/EXECUTIVE OFFICER/MEMBER EXCLUDED? Y / N	N / A					E.L. EACH ACCIDENT	$
	(Mandatory in NH) If yes, describe under DESCRIPTION OF OPERATIONS below						E.L. DISEASE - EA EMPLOYEE	$
							E.L. DISEASE - POLICY LIMIT	$
B	Accident Insurance Full Excess			99072252	9/1/2014	9/1/2015	$100,000 Per Injury $250 Deductible	

DESCRIPTION OF OPERATIONS / LOCATIONS / VEHICLES (Attach ACORD 101, Additional Remarks Schedule, if more space is required)

All activities sanctioned by SoccerMaine and its registered members, teams and clubs. The certificate holder is named as an additional insured with respect to the liability insurance. The certificate is issued on behalf of York Soccer Club

CERTIFICATE HOLDER

Village Elementary School
124 York Street
York ME 03909

CANCELLATION

SHOULD ANY OF THE ABOVE DESCRIBED POLICIES BE CANCELLED BEFORE THE EXPIRATION DATE THEREOF, NOTICE WILL BE DELIVERED IN ACCORDANCE WITH THE POLICY PROVISIONS.

AUTHORIZED REPRESENTATIVE

© 1988-2010 ACORD CORPORATION. All rights reserved.

The ACORD name and logo are registered marks of ACORD

Back to Agenda

CERTIFICATE OF LIABILITY INSURANCE

DATE (MM/DD/YYYY): 8/27/2014

THIS CERTIFICATE IS ISSUED AS A MATTER OF INFORMATION ONLY AND CONFERS NO RIGHTS UPON THE CERTIFICATE HOLDER. THIS CERTIFICATE DOES NOT AFFIRMATIVELY OR NEGATIVELY AMEND, EXTEND OR ALTER THE COVERAGE AFFORDED BY THE POLICIES BELOW. THIS CERTIFICATE OF INSURANCE DOES NOT CONSTITUTE A CONTRACT BETWEEN THE ISSUING INSURER(S), AUTHORIZED REPRESENTATIVE OR PRODUCER, AND THE CERTIFICATE HOLDER.

IMPORTANT: If the certificate holder is an ADDITIONAL INSURED, the policy(ies) must be endorsed. If SUBROGATION IS WAIVED, subject to the terms and conditions of the policy, certain policies may require an endorsement. A statement on this certificate does not confer rights to the certificate holder in lieu of such endorsement(s).

PRODUCER

Bollinger Insurance
101 JFK Parkway
Short Hills NJ 07078

CONTACT NAME:
PHONE (A/C, No, Ext):
FAX (A/C, No):
E-MAIL ADDRESS:

INSURER(S) AFFORDING COVERAGE	NAIC #
INSURER A : Markel Insurance Company	38970
INSURER B : Federal Insurance Company	124
INSURER C :	
INSURER D :	
INSURER E :	
INSURER F :	

INSURED

SoccerMaine-United
Soccer Federation of Maine
512 Warren Avenue
Portland ME 04103

COVERAGES **CERTIFICATE NUMBER:** 1698802431 **REVISION NUMBER:**

THIS IS TO CERTIFY THAT THE POLICIES OF INSURANCE LISTED BELOW HAVE BEEN ISSUED TO THE INSURED NAMED ABOVE FOR THE POLICY PERIOD INDICATED. NOTWITHSTANDING ANY REQUIREMENT, TERM OR CONDITION OF ANY CONTRACT OR OTHER DOCUMENT WITH RESPECT TO WHICH THIS CERTIFICATE MAY BE ISSUED OR MAY PERTAIN, THE INSURANCE AFFORDED BY THE POLICIES DESCRIBED HEREIN IS SUBJECT TO ALL THE TERMS, EXCLUSIONS AND CONDITIONS OF SUCH POLICIES. LIMITS SHOWN MAY HAVE BEEN REDUCED BY PAID CLAIMS.

INSR LTR	TYPE OF INSURANCE	ADDL INSR	SUBR WVD	POLICY NUMBER	POLICY EFF (MM/DD/YYYY)	POLICY EXP (MM/DD/YYYY)	LIMITS	
A	GENERAL LIABILITY	Y		3602AH027607	9/1/2014	9/1/2015	EACH OCCURRENCE	$1,000,000
	X COMMERCIAL GENERAL LIABILITY						DAMAGE TO RENTED PREMISES (Ea occurrence)	$300,000
	CLAIMS-MADE X OCCUR						MED EXP (Any one person)	$5,000
	X Participant Liab						PERSONAL & ADV INJURY	$1,000,000
							GENERAL AGGREGATE	$5,000,000
	GEN'L AGGREGATE LIMIT APPLIES PER:						PRODUCTS - COMP/OP AGG	$2,000,000
	POLICY PRO-JECT X LOC							$
A	AUTOMOBILE LIABILITY	Y		3602AH027607	9/1/2014	9/1/2015	COMBINED SINGLE LIMIT (Ea accident)	$1,000,000
	ANY AUTO						BODILY INJURY (Per person)	$
	ALL OWNED AUTOS / SCHEDULED AUTOS						BODILY INJURY (Per accident)	$
	X HIRED AUTOS / X NON-OWNED AUTOS						PROPERTY DAMAGE (Per accident)	$
								$
A	UMBRELLA LIAB X OCCUR	Y		4602AH027608	9/1/2014	9/1/2015	EACH OCCURRENCE	$1,000,000
	X EXCESS LIAB CLAIMS-MADE						AGGREGATE	$
	DED RETENTION $							$
	WORKERS COMPENSATION AND EMPLOYERS' LIABILITY						WC STATU-TORY LIMITS / OTH-ER	
	ANY PROPRIETOR/PARTNER/EXECUTIVE OFFICER/MEMBER EXCLUDED? Y / N (Mandatory in NH)	N / A					E.L. EACH ACCIDENT	$
	If yes, describe under DESCRIPTION OF OPERATIONS below						E.L. DISEASE - EA EMPLOYEE	$
							E.L. DISEASE - POLICY LIMIT	$
B	Accident Insurance Full Excess			99072252	9/1/2014	9/1/2015	$100,000 $250 Deductible	Per Injury

DESCRIPTION OF OPERATIONS / LOCATIONS / VEHICLES (Attach ACORD 101, Additional Remarks Schedule, if more space is required)

All activities sanctioned by SoccerMaine and its registered members, teams and clubs. The certificate holder is named as an additional insured with respect to the liability insurance. The certificate is issued on behalf of York Soccer Club

CERTIFICATE HOLDER

Coastal Ridge Elementary School
1 Coastal Ridge Drive
York ME 03909

CANCELLATION

SHOULD ANY OF THE ABOVE DESCRIBED POLICIES BE CANCELLED BEFORE THE EXPIRATION DATE THEREOF, NOTICE WILL BE DELIVERED IN ACCORDANCE WITH THE POLICY PROVISIONS.

AUTHORIZED REPRESENTATIVE

© 1988-2010 ACORD CORPORATION. All rights reserved.

The ACORD name and logo are registered marks of ACORD

Back to Agenda

CERTIFICATE OF LIABILITY INSURANCE

DATE (MM/DD/YYYY): 8/27/2014

THIS CERTIFICATE IS ISSUED AS A MATTER OF INFORMATION ONLY AND CONFERS NO RIGHTS UPON THE CERTIFICATE HOLDER. THIS CERTIFICATE DOES NOT AFFIRMATIVELY OR NEGATIVELY AMEND, EXTEND OR ALTER THE COVERAGE AFFORDED BY THE POLICIES BELOW. THIS CERTIFICATE OF INSURANCE DOES NOT CONSTITUTE A CONTRACT BETWEEN THE ISSUING INSURER(S), AUTHORIZED REPRESENTATIVE OR PRODUCER, AND THE CERTIFICATE HOLDER.

IMPORTANT: If the certificate holder is an ADDITIONAL INSURED, the policy(ies) must be endorsed. If SUBROGATION IS WAIVED, subject to the terms and conditions of the policy, certain policies may require an endorsement. A statement on this certificate does not confer rights to the certificate holder in lieu of such endorsement(s).

PRODUCER

Bollinger Insurance
101 JFK Parkway
Short Hills NJ 07078

CONTACT NAME:
PHONE (A/C, No, Ext):
FAX (A/C, No):
E-MAIL ADDRESS:

INSURER(S) AFFORDING COVERAGE	NAIC #
INSURER A : Markel Insurance Company	38970
INSURER B : Federal Insurance Company	124
INSURER C :	
INSURER D :	
INSURER E :	
INSURER F :	

INSURED

SoccerMaine-United
Soccer Federation of Maine
512 Warren Avenue
Portland ME 04103

COVERAGES **CERTIFICATE NUMBER:** 1882495359 **REVISION NUMBER:**

THIS IS TO CERTIFY THAT THE POLICIES OF INSURANCE LISTED BELOW HAVE BEEN ISSUED TO THE INSURED NAMED ABOVE FOR THE POLICY PERIOD INDICATED. NOTWITHSTANDING ANY REQUIREMENT, TERM OR CONDITION OF ANY CONTRACT OR OTHER DOCUMENT WITH RESPECT TO WHICH THIS CERTIFICATE MAY BE ISSUED OR MAY PERTAIN, THE INSURANCE AFFORDED BY THE POLICIES DESCRIBED HEREIN IS SUBJECT TO ALL THE TERMS, EXCLUSIONS AND CONDITIONS OF SUCH POLICIES. LIMITS SHOWN MAY HAVE BEEN REDUCED BY PAID CLAIMS.

INSR LTR	TYPE OF INSURANCE	ADDL INSR	SUBR WVD	POLICY NUMBER	POLICY EFF (MM/DD/YYYY)	POLICY EXP (MM/DD/YYYY)	LIMITS	
A	GENERAL LIABILITY	Y		3602AH027607	9/1/2014	9/1/2015	EACH OCCURRENCE	$1,000,000
	X COMMERCIAL GENERAL LIABILITY						DAMAGE TO RENTED PREMISES (Ea occurrence)	$300,000
	CLAIMS-MADE X OCCUR						MED EXP (Any one person)	$5,000
	X Participant Liab						PERSONAL & ADV INJURY	$1,000,000
							GENERAL AGGREGATE	$5,000,000
	GEN'L AGGREGATE LIMIT APPLIES PER:						PRODUCTS - COMP/OP AGG	$2,000,000
	POLICY PRO-JECT X LOC							$
A	AUTOMOBILE LIABILITY	Y		3602AH027607	9/1/2014	9/1/2015	COMBINED SINGLE LIMIT (Ea accident)	$1,000,000
	ANY AUTO						BODILY INJURY (Per person)	$
	ALL OWNED AUTOS / SCHEDULED AUTOS						BODILY INJURY (Per accident)	$
	X HIRED AUTOS / X NON-OWNED AUTOS						PROPERTY DAMAGE (Per accident)	$
								$
A	UMBRELLA LIAB X OCCUR	Y		4602AH027608	9/1/2014	9/1/2015	EACH OCCURRENCE	$1,000,000
	X EXCESS LIAB CLAIMS-MADE						AGGREGATE	$
	DED RETENTION $							$
	WORKERS COMPENSATION AND EMPLOYERS' LIABILITY						WC STATU-TORY LIMITS / OTH-ER	
	ANY PROPRIETOR/PARTNER/EXECUTIVE OFFICER/MEMBER EXCLUDED? Y / N	N / A					E.L. EACH ACCIDENT	$
	(Mandatory in NH) If yes, describe under DESCRIPTION OF OPERATIONS below						E.L. DISEASE - EA EMPLOYEE	$
							E.L. DISEASE - POLICY LIMIT	$
B	Accident Insurance Full Excess			99072252	9/1/2014	9/1/2015	$100,000 $250 Deductible	Per Injury

DESCRIPTION OF OPERATIONS / LOCATIONS / VEHICLES (Attach ACORD 101, Additional Remarks Schedule, if more space is required)

All activities sanctioned by SoccerMaine and its registered members, teams and clubs. The certificate holder is named as an additional insured with respect to the liability insurance. The certificate is issued on behalf of
York Soccer Club

CERTIFICATE HOLDER

York High School
1 Robert Stevens Drive
York ME 03909

CANCELLATION

SHOULD ANY OF THE ABOVE DESCRIBED POLICIES BE CANCELLED BEFORE THE EXPIRATION DATE THEREOF, NOTICE WILL BE DELIVERED IN ACCORDANCE WITH THE POLICY PROVISIONS.

AUTHORIZED REPRESENTATIVE

© 1988-2010 ACORD CORPORATION. All rights reserved.

The ACORD name and logo are registered marks of ACORD

Back to Agenda

AGENDA ITEM NUMBER: ____

REQUEST FOR ACTION BY BOARD OF SELECTMEN

Date Submitted: September 18, 2014	**Type of Action:**
Date Action Requested: September 22, 2014	☐ **Procedural** ☒ **Formal Action**
Regular X **Work Session** __	☐ **Other:** _____
Subject: Special Event Permit: Walk MS	

TO: **BOARD OF SELECTMEN**

FROM: Melissa M. Avery, Assistant to the Town Manager

RECOMMENDATION:

PROPOSED MOTION: I move to approve Special Event Permit application for the National MS Society's *Walk MS* event on Sunday, September 28, 2014 with the attached conditions given by Department Heads.

Discussion: All appropriate departments have been notified and given approval, see attached.

FISCAL IMPACT:

DEPARTMENT LINE ITEM ACCOUNT:

BALANCE IN LINE ITEM IF APPROVED:

Prepared By: Melissa M Avery Reviewed By: _____

Back to Agenda

Rec'd 9/8

Town of York, Maine
Special Event Permit Application

This application for a special event permit is hereby presented to the York Town Manager, 186 York Street, York, ME 03909.

Date: 5/30/14

Name of Event: Walk MS – York

Type of Event: Fundraising Walk

Organization Name: National MS Society Phone #: 207-781-7960

Organization Address: 74 Gray Rd. City Falmouth State: ME Zip: 04105

Applicant Name: Judith Hamer Phone #: 207-781-9930

Applicant Address: 74 Gray Rd. City: Falmouth State: ME Zip: 04105

Contact Name for Day of Event: Sue Tidd Contact Phone # 207-877-4431

Date of Event: 9/28/14 Day of Week: Sunday.

Starting Time: 10 a.m. Ending Time: ~~12 noon~~ 2:00 P.M.

Assembly Area: York High School

Dispersal Area: York High School

Event Route: Long Sands Rd. to Long Beach Ave. to Railroad Ave. to Church St. to Long Beach Ave. to Long Sands Rd. to Robert Stevens Dr.

Approximate Number of Persons Attending (If more than 500, Insurance coverage needed)
140

Describe number of bands, vehicles, signs, floats, or other articles carried or displayed along with method of participation (walking, bicycles, motorcycles etc):

Walkers only

Describe how group is organized and supervised to insure order: A support and gear vehicle will continuously ride route.

Purpose of the Event: Fundraising event for MS.

The above information is true to the best of my knowledge and belief.

Signature of Applicant: Judith Hamer

Back to Agenda

For Town Use Only

Reviewed by:

Department	**Initials**	
Police Department	Szeniawski	09-08-2014
Public Works	Lessard	09-08-2014
Parks/Recreation	Sullivan	09-08-2014
Village Fire	Apgar	09-08-2014
York Beach Fire	Bridges	09-09-2014
Code Enforcement	Burns	09-08-2014
York Ambulance	Prince	09-08-2014

Special Conditions:

York Beach Fire: These roads all have sidewalks and if the walkers stay on the sidewalks there should be no problem. Unfortunately, using all the sidewalks will require crossing the roads. If there is an unsafe location, it would be at these road crossings because these roads are still quite busy during the date of this event.

Any Questions: Chief Dave Bridges (207) 363-1014

Town Manager

Date